INSTALLATION MANUAL

CEILING FAN WITH LIGHTS

Model No.: CFL-1235-01

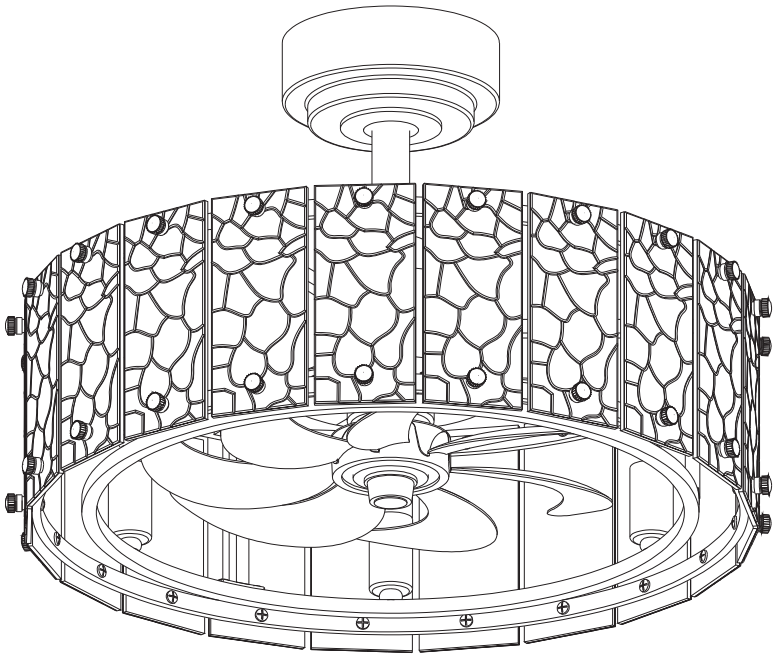

Scan for Installation Video

TOOLS REQUIRED



Ladder

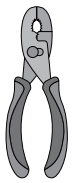

Pliers



Wire Strippers

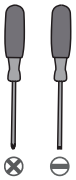

Screwdrivers

SAFETY RULES

1. Be sure the power to the wires you are working on is disconnected, either the fuse is removed or the circuit breaker is turned off. Turning the power off using the light switch is not sufficient to prevent electrical shock.
2. A qualified licensed electrician is required for the installation.
3. The outlet box and support structure must be securely mounted and capable of reliably /supporting a minimum of 70 pounds. Use only UL (cUL for Canadian Installation) listed mounting boxes marked "FOR FAN SUPPORT".

4. The fan must be mounted with a minimum of 7 feet clearance from the trailing edge of the blades to the floor.
5. Do not operate reversing switch while fan blades are in motion (if applicable). Fan must be turned off and blades stopped before reversing blade direction.
6. Do not place any objects in the path of the blades.
7. To avoid personal injury or damage to the fan and other items, be cautious when working around or cleaning the fan.

8. Do not use water or detergents when cleaning the fan or fan blades. A dry dust cloth or lightly dampened soft cloth will be suitable for the cleaning.
9. After marking electrical connections, spliced conductors should be turned upward and pushed carefully up into outlet box. The wires should be spread apart with the grounded conductor on one side of the outlet box.
10. Electrical diagrams are reference only, different fan light may have different light shade and bulbs.
11. Use only our replacement parts. This equipment has been tested and found to comply with the limits for a class B digital device, pursuant to part 15 of the FCC Rules. These limits are to provide reasonable protection against harmful interference in a residential installation. This equipment generates, uses and can radiate radio frequency energy and if not installed and used in accordance with the instructions may cause harmful interference to radio communications.

Warning:

To reduce the risk of personal injury, use only the two steel screws and washers provided with the outlet box for mount-ing to the outlet box. Most outlet boxes
commonly used for the support of lighting fixtures are not acceptable for fan support and need to be replaced, consult a qualified electrician if in doubt.

To reduce the risk of fire, electric shock or person injury, mount fan to outlet box marked "acceptable for fan support".

To reduce the risk of personal injury, do not bend the blade brackets (also referred to as flanges) during assembly or af-ter installation. Do not insert objects in the path of the blades.

INSTALLATION PREPARATION

Tools You Need

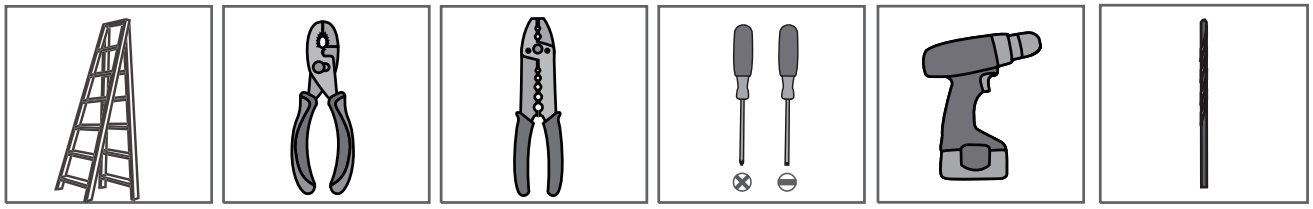

- [x] Ladder
- [x] Pliers
- [x] Wire Strippers
- [x] Screwdrivers
- [ ] Power Drill (optional)
- [ ] Drill Bit (optional)

If mounting to a support structure, you will also need the optional tools.

What to Expect with Your Installation

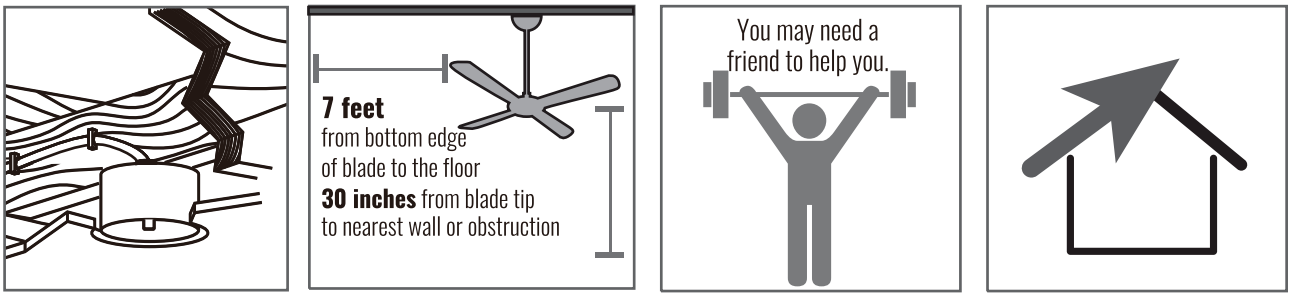

- [x] Must be able to secure the fan to building structure or fanrated outlet box
- [x] Assess location
- [x] Check the box to see the weight of the fan
- [x] Applicable for angled ceiling

SWITCH SELECTION

Note: Using a dimmer switch to control the fan may damage the fan. To reduce the risk of fire or electrical shock, do not use a dimmer switch to control the fan.

The recommended switches are as follows:

Recommended:

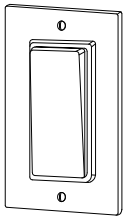

Single Pole Switch
(Not Included)

Not Recommended:

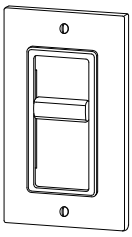

Dimmer Switch

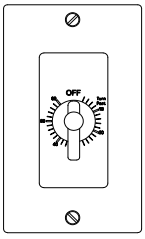

Timer Switch

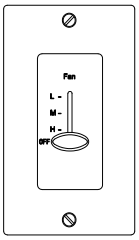

Fan Speed Control Switch

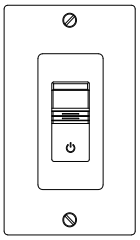

Motion Sensor Switch

Installation Recommended

Room Size:

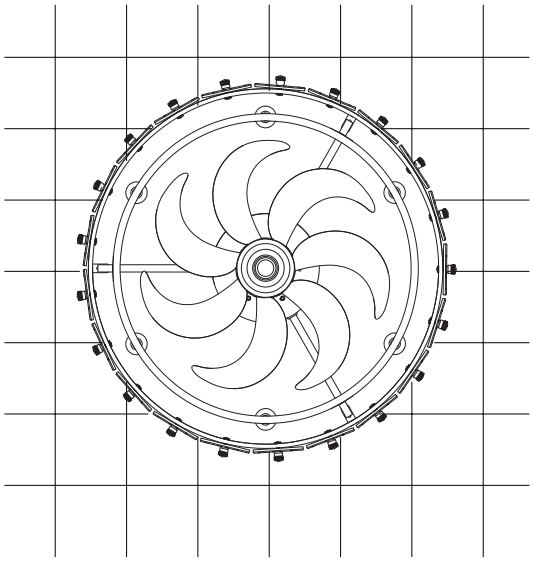

UP TO 8 ft × 10 ft

Room Height:

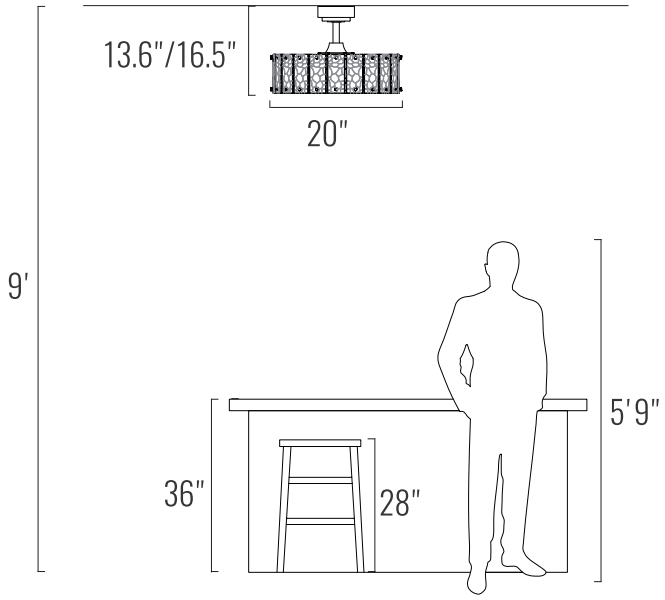

Recommended ceiling height: 7 to 10 ft.

PACKING LIST

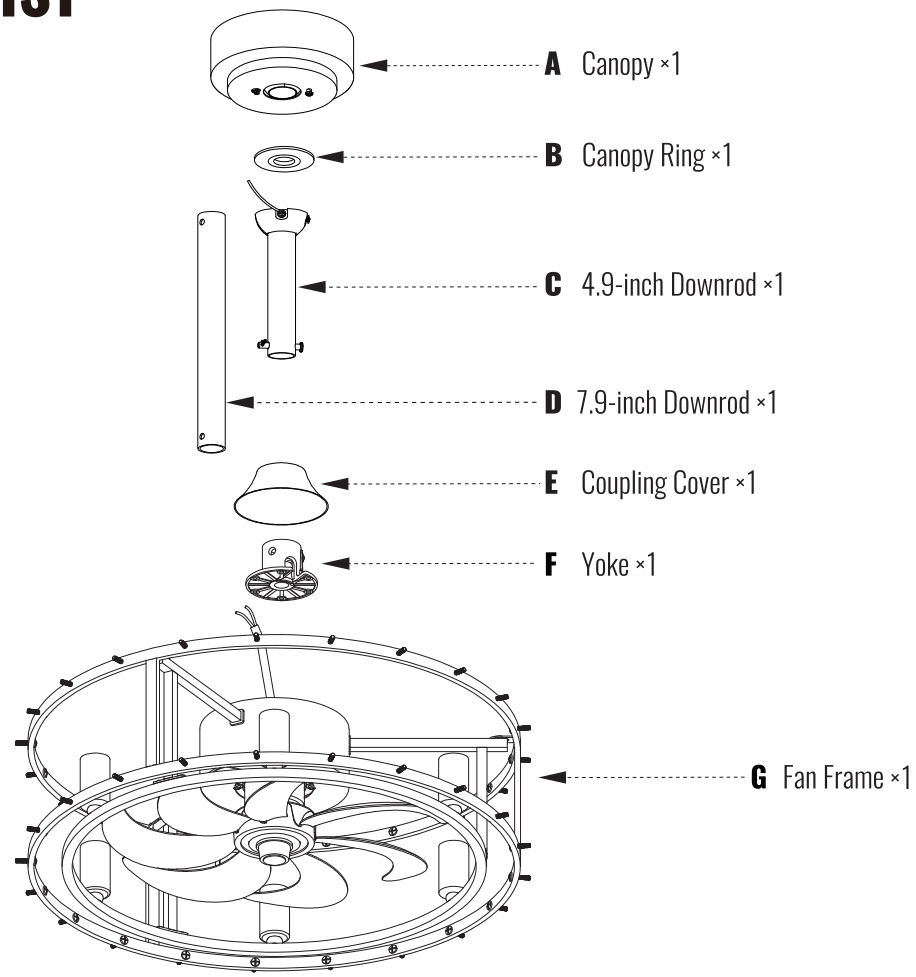

INSTALLATION KIT

AA 1× 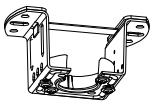 Mounting Bracket	**BB** 3×  Wire Nut	**CC** 2× 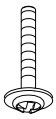 Outlet Box Screw	**DD** 4×  Wood Screw	**EE** 1×  Clevis Pin
FF 1×  "R" Pin	**GG** 2×  Set Screw	**HH** 2× 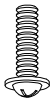 Canopy Screw	**II** 21×  Glass	**JJ** 1×  Gloves
KK 2×  Remote Holder Screw	**LL** 2×  Remote Holder Anchor	**MM** 1×  Remote Control	**NN** 1×  **Remote Holder**	

NOTE:

1. The listed quantity is for installation, extra hardware may be included.
2. Parts "AA/HH" have been installed together with the canopy (A).
3. Parts "EE/FF" have been installed together with the 4.9-inch downrod (C).

INSTALLATION

1. Install the Yoke

Step 1. Remove the yoke screws from the fan frame (G).

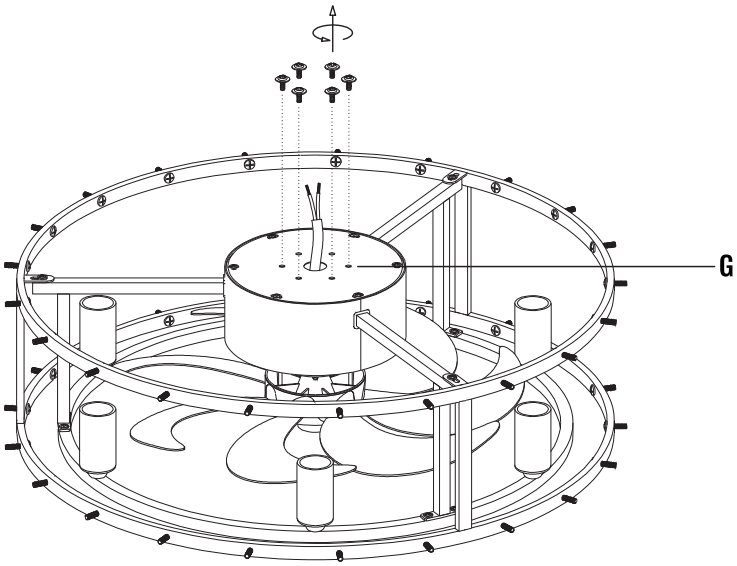

Step 2. Pass the power cord of fan frame (G) through the yoke (F).

Step 3. Align the holes of yoke (F) and fan frame (G), and tighten them with the yoke screws just removed.

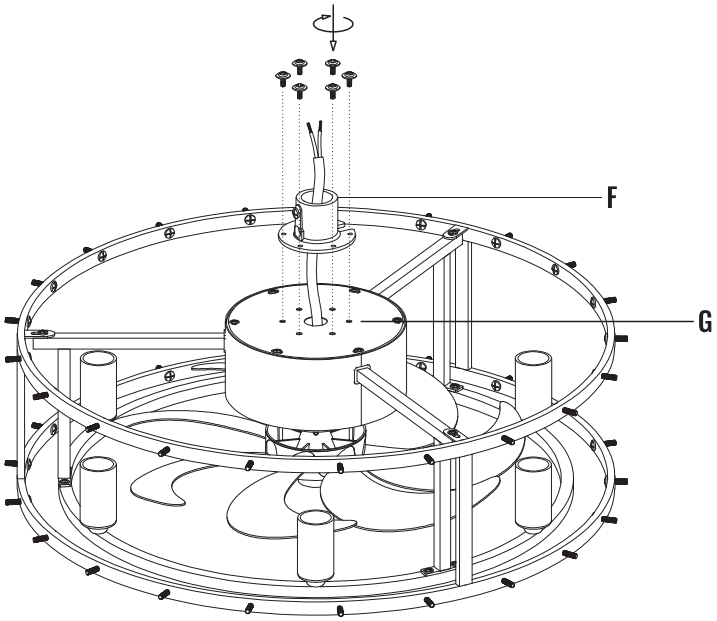

2. Install the Downrod

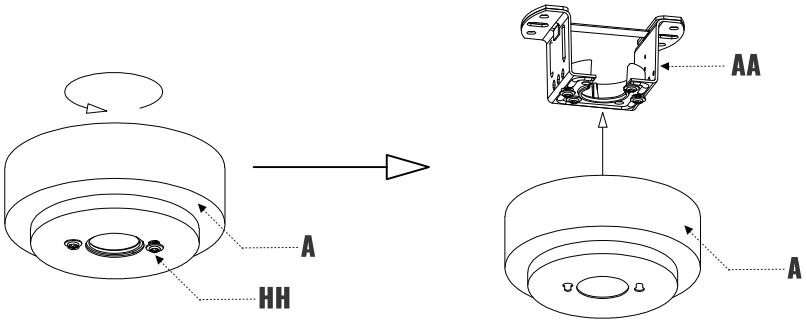

Step 1. Loosen the canopy screws (HH) on the mounting bracket (AA), but do not remove them.

Step 2. Rotate the canopy (A) to remove the mounting bracket (AA).

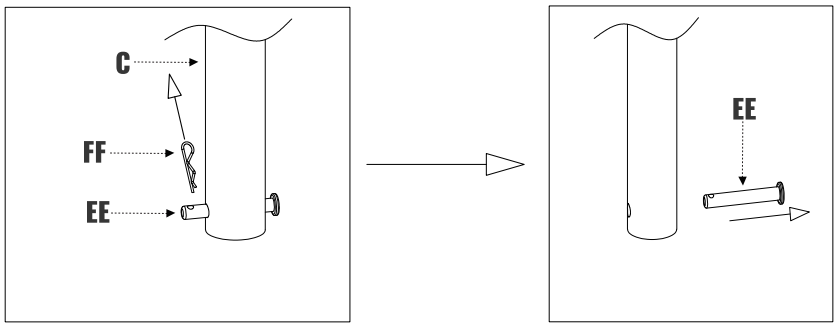

Step 3. Remove the "R" pin (FF) and clevis pin (EE) from the downrod (C).

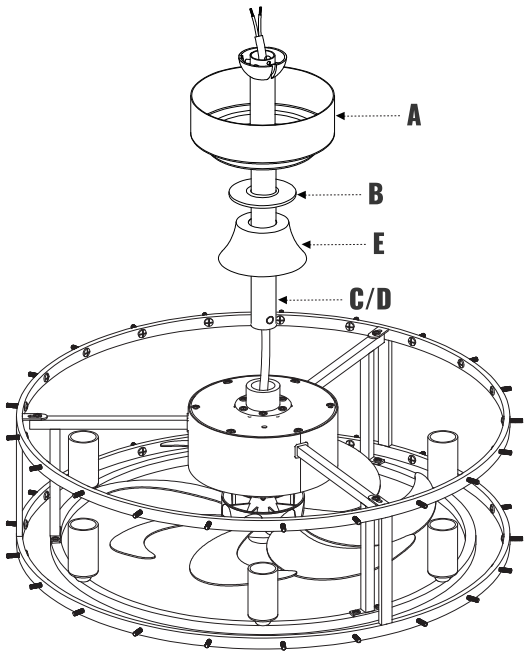

Step 4. Pass the downrod (C/D) through the canopy (A), canopy ring (B), and coupling cover (E).

Step 5. Thread the power cord through downrod (C/D).

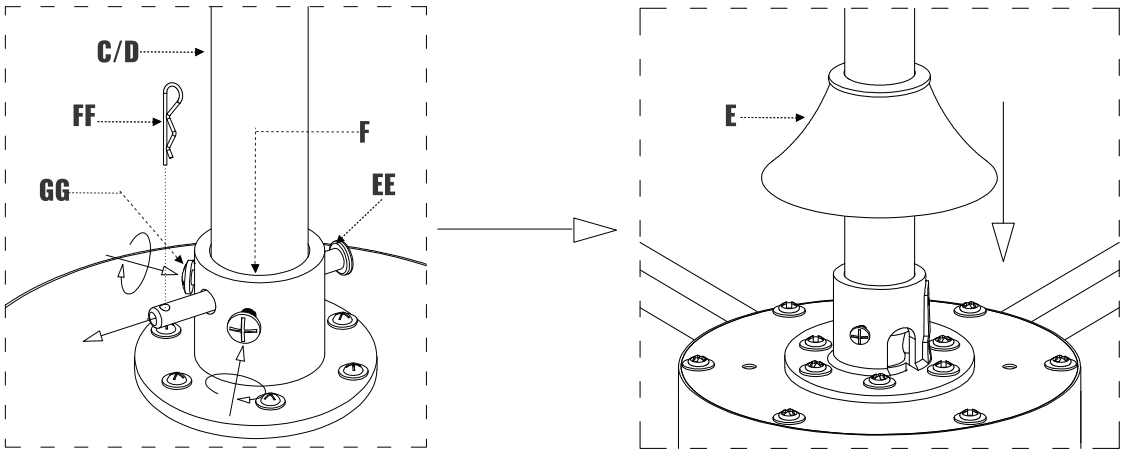

Step 6. Align the holes at the bottom of the downrod (C/D) with those in the yoke (F). Carefully insert the clevis pin (EE) through the holes in the yoke (F) and downrod (C/D) (Be careful not to jam the clevis pin against the wires inside the downrod). Insert the "R" pin (FF) into the end of the clevis pin (EE). Tighten the set screws (GG) to secure the downrod (C/D).

Step 7. Fit the coupling cover (E) onto the fan frame (G).

3. Mount the Bracket And Hang the Fan

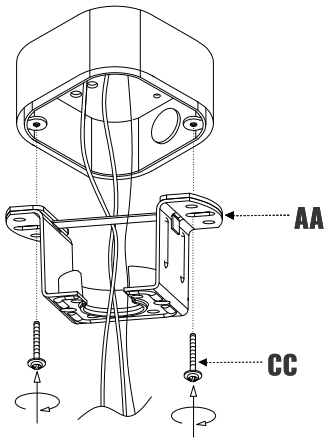

Step 1. Take off the screws from outlet box, attach the mounting bracket (AA) to the box with screws taken off or provided in package (CC).

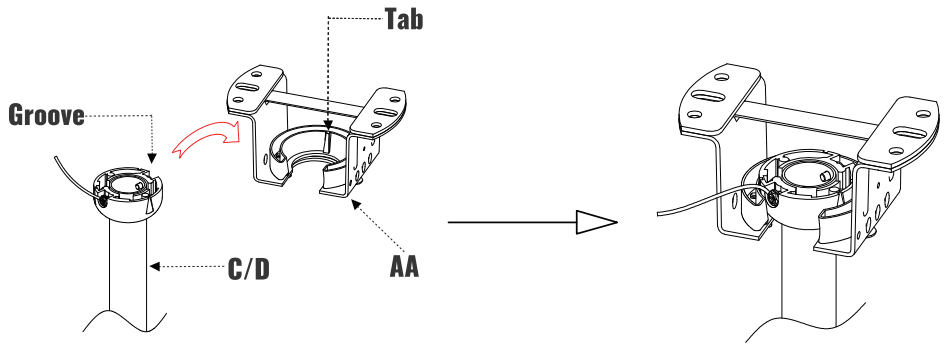

Step 2. Lift the downrod (C/D) into the mounting bracket (AA). Rotate the downrod until the tab in the mounting bracket (AA) is seated in the groove in the downrod ball.

4. Connect the Wires

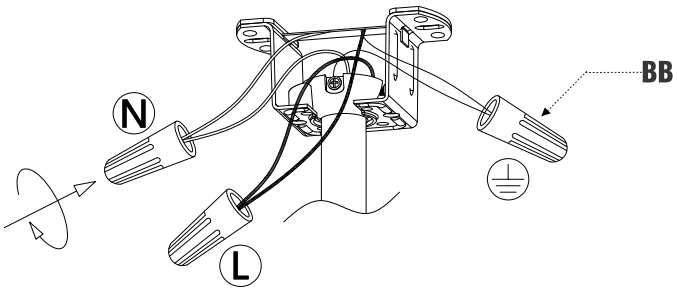

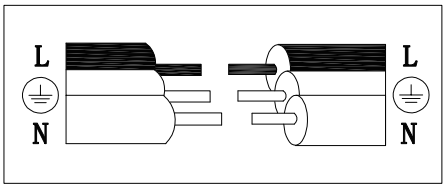

Connect the wires to the house supply wires with wire nuts (BB), ground wire (green, green/yellow, or bare copper) to ground wire, neutral wire (white) to neutral wire, and hot wire (black) to hot wire. Wrap the connection with electrical tape.

NOTE:

1. This fan only needs one set of input wires (black, white, and ground wire). Both of the fan and lights will be controlled by the remote controller.

2. This fan can only be connected to an on/off switch if you have one, not a dimmer switch.

5. Attach the Canopy

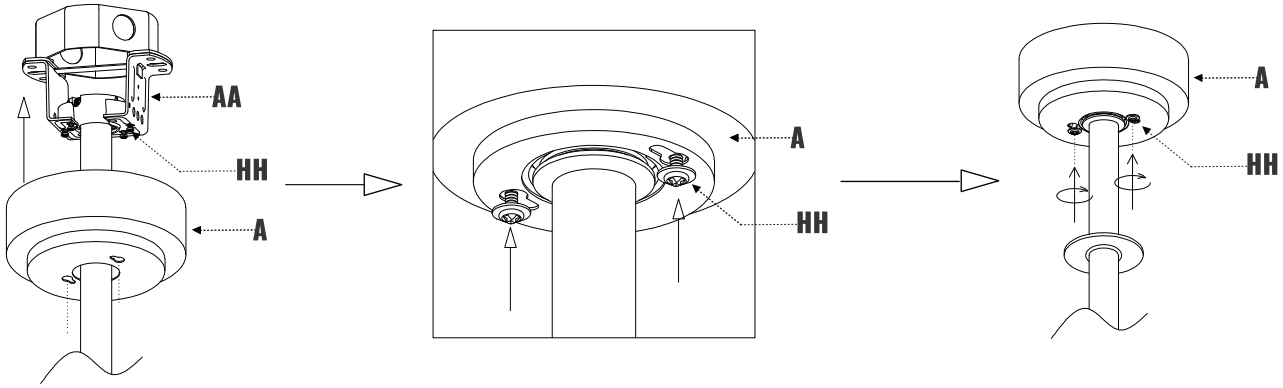

Step 1. Push canopy (A) up to the ceiling, making canopy screws (HH) go through the screw holes on canopy (A), then rotate canopy (A) to make it lock onto the canopy screws (HH).

Step 2. Tighten the canopy screws (HH) to secure the canopy (A).

Step 3. Push the canopy ring (B) upwards until it covers the canopy screw (HH).

6. Install the Glass

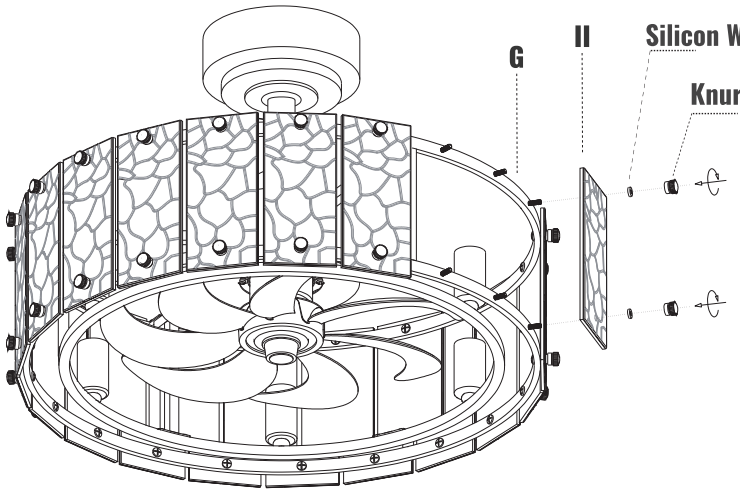

Step 1. Take off knurled nuts and silicon washers from the fan frame (G).
Step 2. Hang the glass (II) on the screws of the fan frame (G).
Step 3. Put the silicon washer on the screws of the fan frame (G).
Step 4. Tighten the glass with a knurled nut.

7. Install the Lights

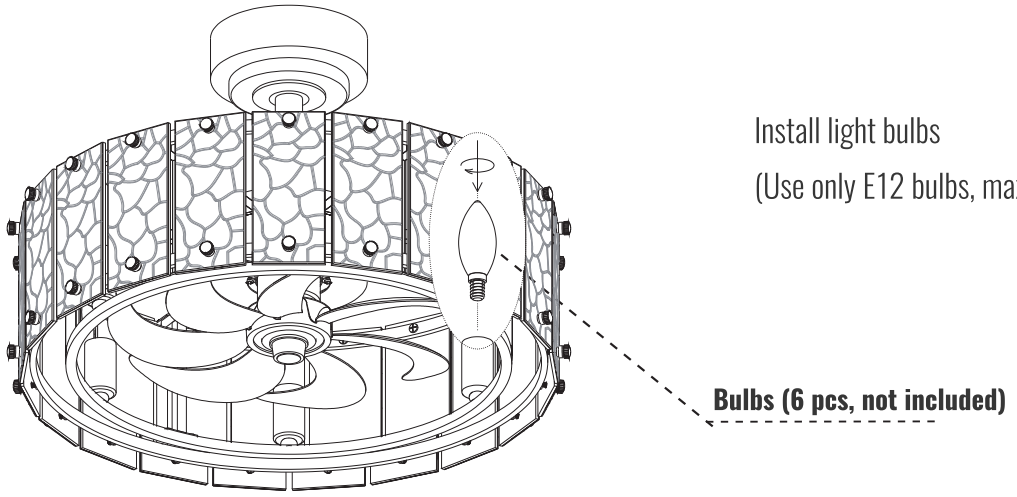

Install light bulbs
(Use only E12 bulbs, max 40W each).

8. Remote Control Instructions

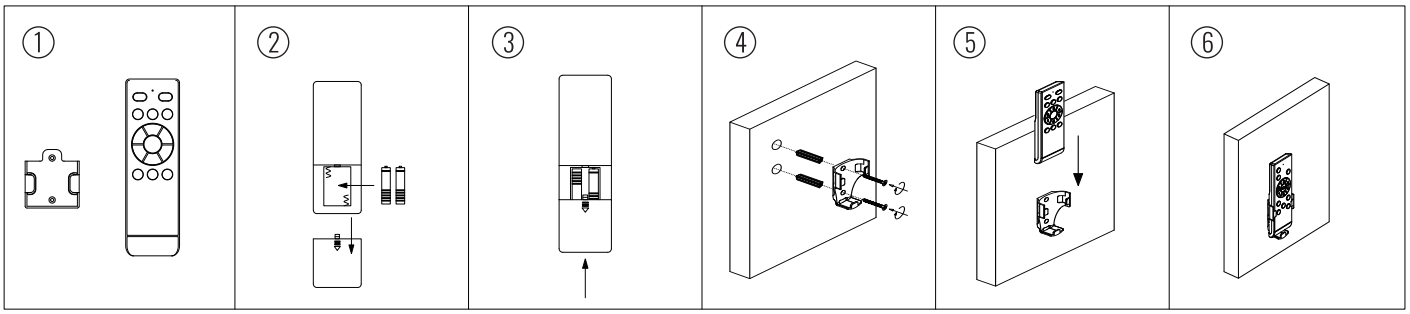

Insert 2 batteries before using: AAA 1.5V battery x 2pcs (not included).
Step 1. Mark and drill screw holes in the wall, then insert the remote holder anchors .
Step 2. Use remote holder screws to fix the remote holder onto the wall.

REMOTE CONTROL INSTRUCTIONS

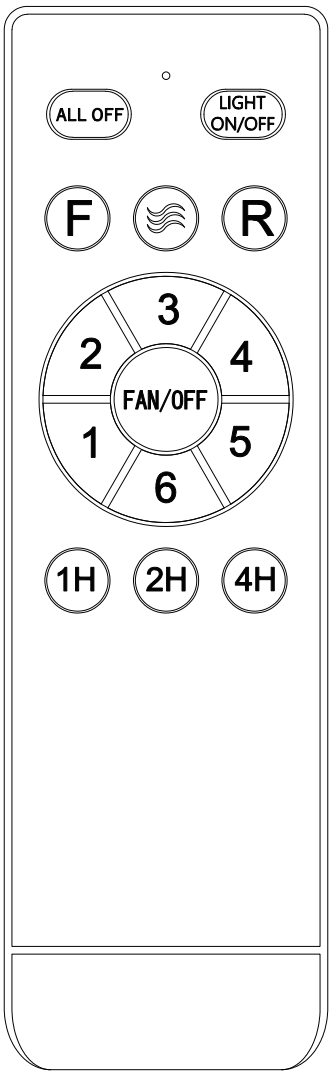

ALL OFF	Turn off the fan and lights.
LIGHT ON/OFF	Turn on/off the lights.
	Natural wind, fan speed will change automatically.
F	"F" refers the fan rotates forward.
R	"R" refers the fan rotates in reverse.
3 2 4 1 5 6	1/2/3/4/5/6 for fan speeds.
FAN/OFF	Turn off the fan.
1H 2H 4H	1H/2H/4H for timing the fan.
FAN/OFF	**REMOTE SIGNAL PAIRING:** If the remote control loses signal with the fan, turn off the power from wall switch, then turn it on, immediately press and hold this button for around 3 seconds, after the fixture beeps or flashes, it's done.

NOTE:
Please insert 2 batteries before using. AAA 1.5V battery x 2pcs (not included).

TROUBLE SHOOTING

1. Fan doesn't work

• Make sure the fixture is connected to an ON/OFF wall switch, not a dimmer switch.
• Check the remote control battery (not included in this package).
• Check the circuit breaker to ensure the power is on.
• Turn off power from the circuit breaker, then loosen the canopy and check all the connections according to the wiring diagram.

2. Lights Do Not Light Up / Flicker / Noisy Operation

• Make sure the fixture is connected to an ON/OFF wall switch, not a dimmer switch.
• Check your power and switch to make sure it's powered on.

3. Noisy Operation

• Tighten the light fitting and blade bottom cover.
• Re-tighten all screws on the bracket, downrod, and fan blades (do not over tighten).
• Check to see if any of the blades are cracked. If so, replace all of the blades.

4. Remote does not work

• Make sure the battery is installed correctly.
• Pair the remote control again (check Remote Control Instructions).
• Install 2 new batteries.

CLEAN AND CARE

To clean, wipe the fixture with a soft cloth. Spraying from chemical cleaners can discolor the finish of the fixture. Do not use scouring pads, powders, steel wool, or abrasive paper to clean this fixture.

ORDERING PARTS

Keep this manual for future reference, and in case replacement parts are needed. Available parts can be ordered from the place of purchase. Use exact wording from diagrams when ordering parts.