Item Number: A03291/A03292

WARNING (To reduce the risk of fire, electric shock, or injury to persons):

1. We suggest installation by a **licensed electrician**.
2. Please read the instruction carefully and save it as you may need it at later time.
3. Before you start, **NEVER** attempt any work without shutting off the electricity until the work is done. A). Go to the main fuse, or circuit breaker, box in your home. Place the main power switch in the "**OFF**" position. B). Place the wall switch in the "**OFF**" position.
4. Mounting surface should be clean, dry, flat, strong enough and 1/4" larger than the canopy on all side. Any gaps between the mounting surface and canopy exceeding 3/16" should be corrected as required.
5. Make sure that the ceiling or wall can stand the weight of the lamp before fixture.
6. Make sure the voltage you are using is **120V**. The maximum wattage is Type A,Max **60W** per bulb.
7. Keep the lamp away from acidic and basic objects in case of damaging the surface of the lamp.
8. When replacing bulb, you should turn off or unplug the lamp and you must wait until it is cool as bulbs get hot quickly.
9. The safety instructions appearing in this manual are not meant to cover all possible conditions that may occur. It must be understood that common sense, caution and care must be used with any electrical products.

IMAGE FOR FINISHED PRODUCT:

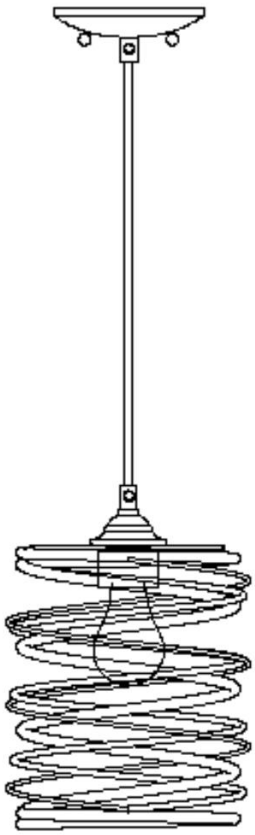

TOOLS REQUIRED (NOT INCLUDED):

Before doing assembly and installation please prepare the needed tools as below picture

				
Ladder	Phillips head, flat blade screwdriver	Electrical tape	Pliers	Wire cutter/Stripper

PARTS TYPE & QTY INCLUDING:

(A) Mounting plate assembly (1)
(B) Green ground screw (1)
(E) Canopy (1)
(F) Strain relief (2)
(G) Knob ball (2)
(H) Cord (1)
(I) Socket (1)
(J) Metal shade (1)
(K) Socket ring (1)

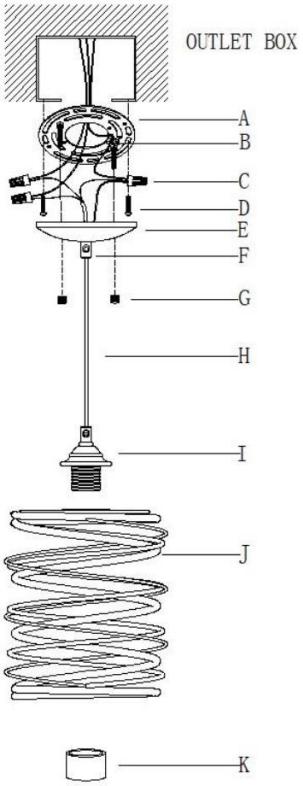

ACCESSORIES & QTY ENCLOSED:

(C) Plastic Wire Connector (3)
(D) Mounting screw (2)
(L) Allen wrench (1)



ASSEMBLY & INSTALLATION INSTRUCTIONS:

1. Carefully remove the fixture from the carton and check that all parts and accessories are included as shown in the above illustration .
2. **Turn off power**
   Before you start to make installation, NEVER attempt any work without shutting off the electricity until the work is done. A). Go to the main fuse, or circuit breaker, box in your home. Place the main power switch in the "OFF" position. B). Place the wall switch in the "OFF" position.
3. Place the metal ring over the socket (I),then secure with the retaining socket ring (K)**.**

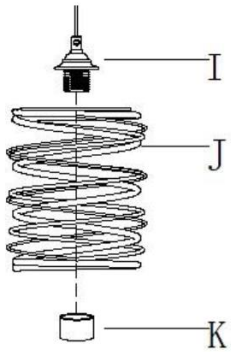

4. Unscrew the ball knobs (G) from canopy (E) then gently remove the mounting plate assembly (A)

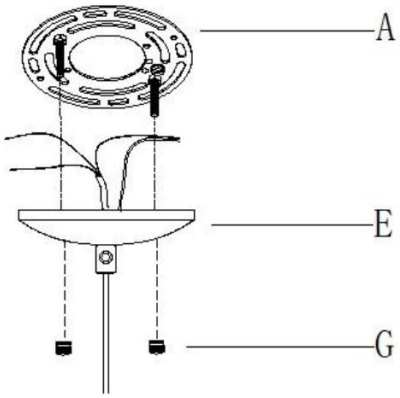

5. Adjust the length of the cords to achieve the desired height of the mounted fixture.

1) Use the allen wrench(L) to unscrew the screw in strain relief (F), carefully pull the cord(H) up or down to lengthen or shorten the cord. (H)
2) Once desired height of fixture is achieved, Carefully and gently tighten the screw till snug

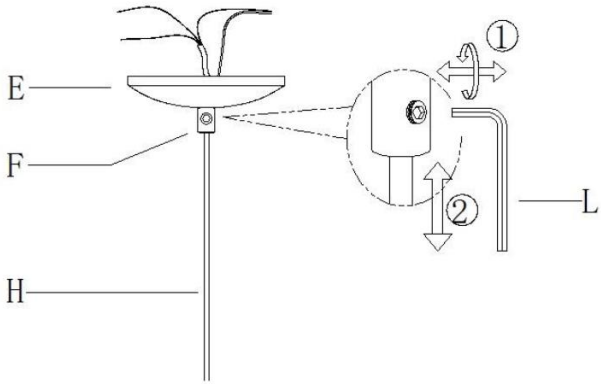

6. If needed, cut off the extra power cord length on the fixture 2 wires cord and green ground wire so that they all are at least 6 inches (152.4 mm) long within the outlet box

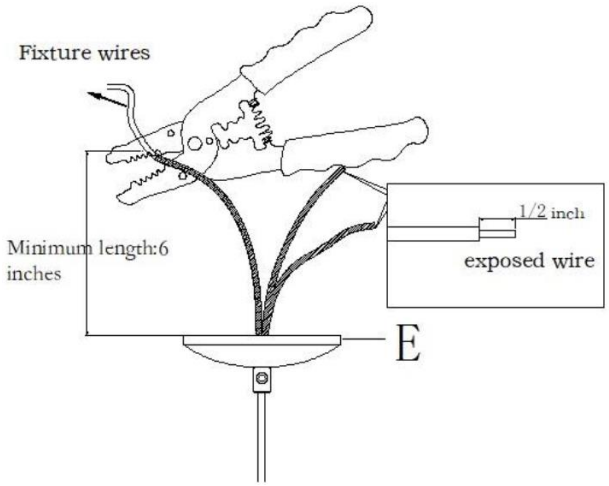

7. Carefully pass wires through the mounting plate assembly (A) Secure the mounting plate assembly (A) to outlet box with the outlet box screws（D）.

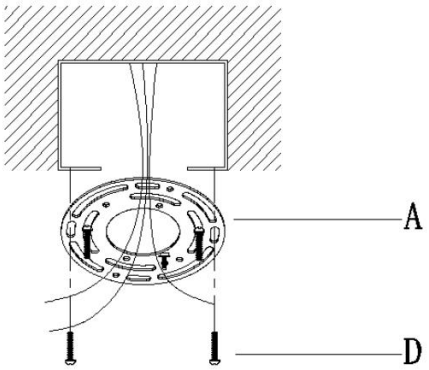

8. Make wire connections

Connect wires as below wires connecting shown. **TAKE NOTE OF YOUR COLOR OF FIXTURE ,NEVER CONNECT FIXTURE WIRES TO GROUND WIRES**

Connect ground wire according to below chart

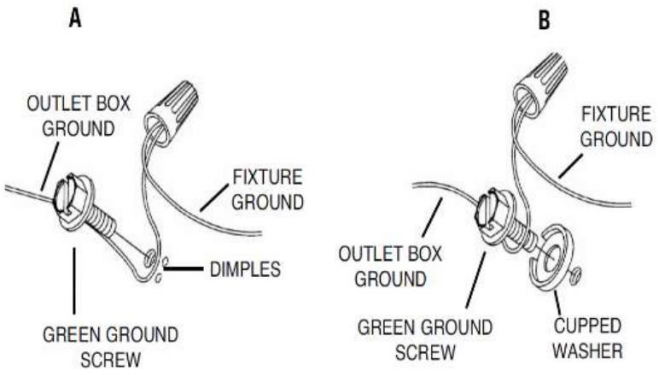

Connect wires according to below chart

Connect Black or Red Supply Wire to:	Connect White Supply Wire to:
Black	White
*Parallel cord (round & smooth)	*Parallel cord (square & ridged)
Clear, Brown, Gold or Black without tracer	Clear, Brown, Gold or Black with tracer
Insulated wire (other than green) with copper conductor	Insulated wire (other than green) with silver conductor

*Note: When parallel wires (SPT I & SPT II) are used. The neutral wire is square shaped or ridged and the other wire will be round in shape or smooth (see illus.)

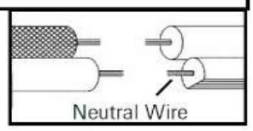

Twist plastic wire connector until wires are tightly joined together,wrap each connector with approved electrical tape for more secure connection and carefully stuff all wires into the outlet box .

9. Remove the knob balls (G) from the mounting plate assembly (A). Fit the canopy (E) to the mounting plate assembly (A) and secure with the ball knobs (G)

Note: The canopy (E) should be snug against the ceiling and the mounting balls. If not, adjust the length of the nipples on the mounting plate assembly (A) by unscrewing the preassembled hex nuts and then screwing the mounting screws in or out of the mounting plate until the length is achieved. Tighten the hex nuts and proceed to step 9

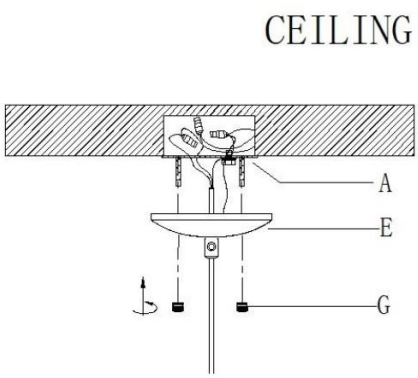

10. Install bulb (Not included. Please do not exceed the maximum capacity recommended on the socket.)

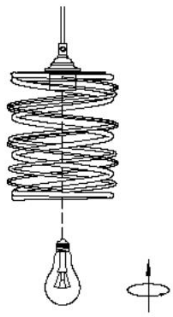

11. Check everything is already installed properly, then you could turn on the light. Enjoy!

CLEANING

To clean, wipe fixture with a soft cloth. Do not use abrasive materials such as scouring pads or powders, steel wool or abrasive paper.

ORDERING PARTS

Keep this sheet for future reference, and in case you need to order replacement parts. All parts for this fixture can be ordered from place of purchase. Be sure to use exact wording from illustration when ordering parts.