Embark™

20" x 26" rectangular framed medicine cabinet

K-R33292

Features

- 4" (102 mm) -deep shelves offer more room for larger jars, bottles, and grooming supplies
- Two adjustable tempered-glass shelves offer additional bathroom storage
- Framed mirrored door with finish-matched hinges
- Mirrored Interior
- Three-way adjustable soft-close hinges with 105° opening capability for easy cabinet access
- Easy-hang bracket mounts cabinet securely and simplifies surface-mount applications
- Includes side mirror kit for surface-mount installation



Material

- Anodized aluminum construction with a durable rustproof and chip-resistant finish

Installation

- Surface-mount or recessed
- Can be installed with left- or right-hand swing
- Includes mounting hardware for surface or recessed installation

Codes/Standards

None Applicable

KOHLER® One-Year Limited Warranty

See website for detailed warranty information.

Embark™

20" x 26" rectangular framed medicine cabinet

K-R33292

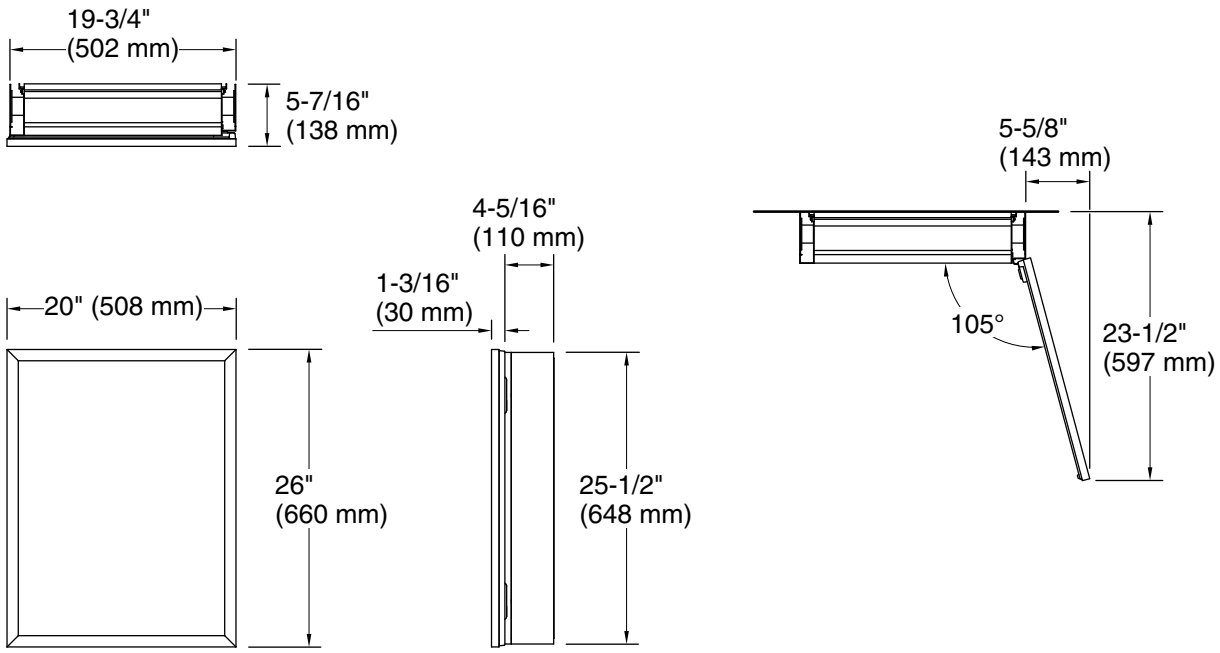

Technical Information

All product dimensions are nominal.

Lighting included: No

Notes

Install this product according to the installation instructions.

Install this product according to the installation instructions.

IMPORTANT! For recess mounting, the wall cavity must be framed and cabinet secured to framing studs.Reroute any electrical wires or water supply piping from the wall cavity. If you encounter drain or vent piping, or if your wall is load-bearing, consult a professional before proceeding.

CAUTION: Risk of property damage. For surface mounting, use anchors (not provided) rated for the loaded weight of this product. Refer to the anchor manufacturer's instructions.

When determining the height of the medicine cabinet, ensure the mirrored door will clear all obstacles (such as a faucet). A minimum distance of 3" (76 mm) is required.