VESSEL SINK MODEL #005-303-XXX

Scratch Resistant•Stain Resistant•Thermal Shock Resistant

Product Information & Diagram

Fixture*:		basin area	water depth
Sink		16” x 16”	5”
Drain	1¾”		

*Approximate measurements for comparison only.

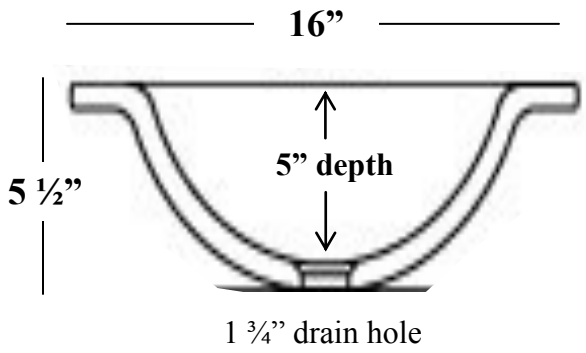

Vessel Installation Instructions

JSG *Oceana* recommends that Vessel sinks and routering of your solid surface material should be installed by a professional installer for best results.

The physical use of the sink will assure a more accurate cut for drain.

The instructions that follow are for installing a JSG ***Oceana*** Vessel glass sink on top of a solid surface countertop only. Minimum thickness of the actual countertop is 1/2”.

Requirements vary for installation in a granite, marble, stone or butcher block countertop. Please contact your fabricator for specific details.

Before installing, inspect the sink for damage. Do not install a damaged unit. No returns accepted after installation, unless product is mechanically defected. Store the sink in the protective carton whenever possible.

Remember, it is your responsibility to follow all local plumbing and building codes.

The warranty will be voided if these installation instructions are not followed.

- Drill a hole in countertop slightly larger than the width of your drain. (no less than 1 3/8” and no larger than 1 1/2”).
- Place a rubber washer and/or apply a thin bead of caulking between vessel and countertop as a buffer.
- Apply thin layer of plumber’s putty under rim of drain and place into sink. Drain will go through vessel and hole in countertop.
- Hand tighten drain underneath countertop. DO NOT OVERTIGHTEN.
- If the drain does not have enough threads to tighten completely up to the countertop, purchase a piece of PVC pipe to make-up the difference. Use two rubber washers to seal the PVC pipe and prevent leakage. (PVC pipe can also be used if you purchase a drain with an overflow hole.)
- Clear caulking or epoxy can also be applied between vessel and countertop for added stability.

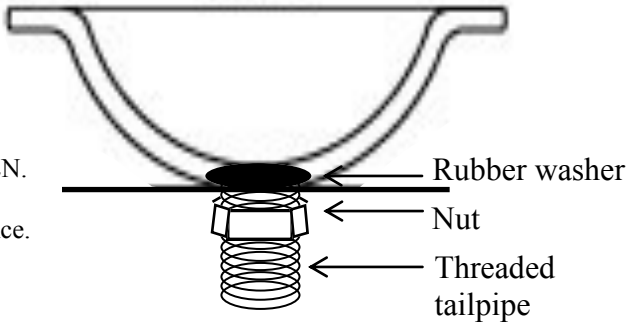

215 North 4th Street, Jeannette, PA 15644 ph:724.523.5567 fax:724.523.0123
www.jsgoceana.com