Snow Shovel

Product ID. 7LXYQ

Scan for Support
support@garvee.com

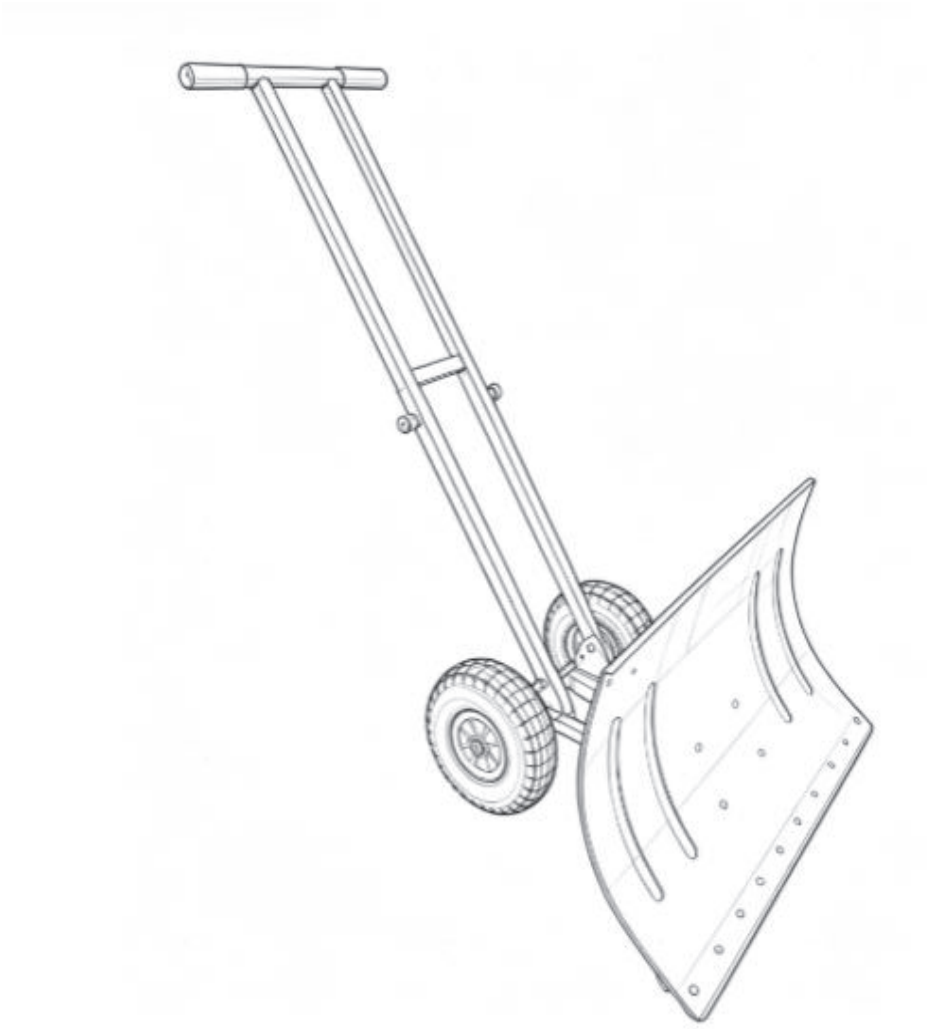

GARVEE.com

COMPONENTS

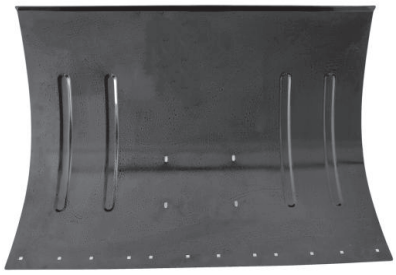	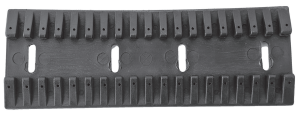	
A Shovel board(×1)	**B** PVC rubber strip	**B1** PVC rubber strip
		
C handle bracket （×1）	**D** Axle bracket (×1)	**E** Push rod(×2)
		
F Handle (×1)	**G** Bottom Rod	**H** Wheel (×2)
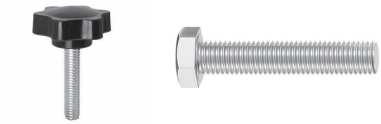		
I Plum blossom screw(×4) **/J** bolt	**K** carriage bolt/ **L** wing nut	**M** nut/ **N** washer/ **O** spring pad
		
P quick-release	**Q** Washer/Split pin(×2)	**R** wrench

ASSEMBLY

Step 1: Using carriage bolts/washers/spring washers/nuts **KNM**, install the PVC rubber strips **B** onto shovel plate **A**

⚠ **The installation sequence for the 36x7.5", 36x10", 36x16.5", and 36" is B, B, B1, B."**

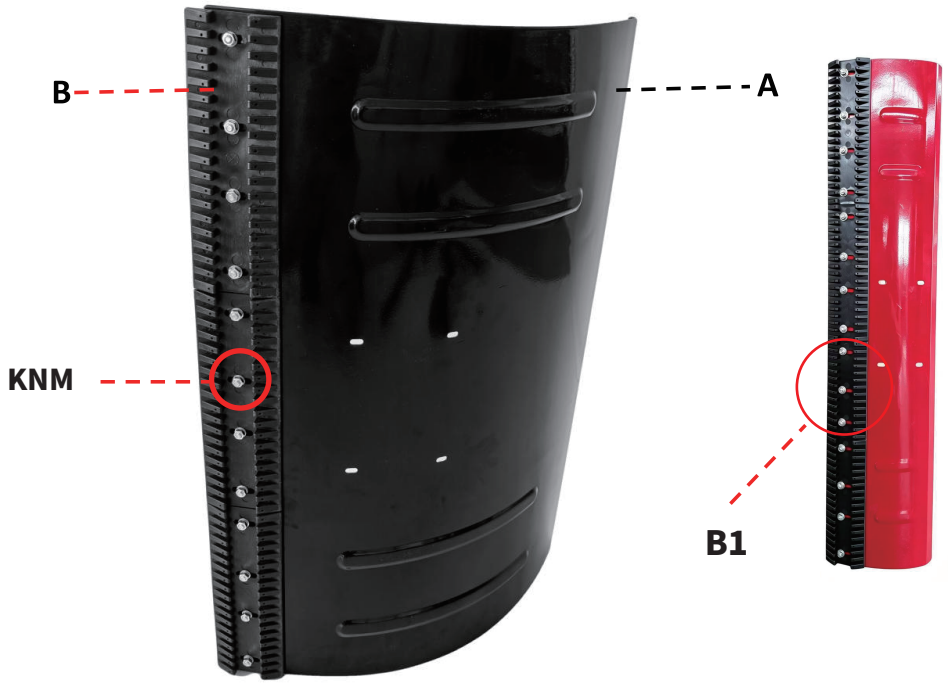

Step 2: Install 1 handle bracket **C** onto shovel plate **A** using 4 round head bolts/washers/spring washers/nuts **KNM**

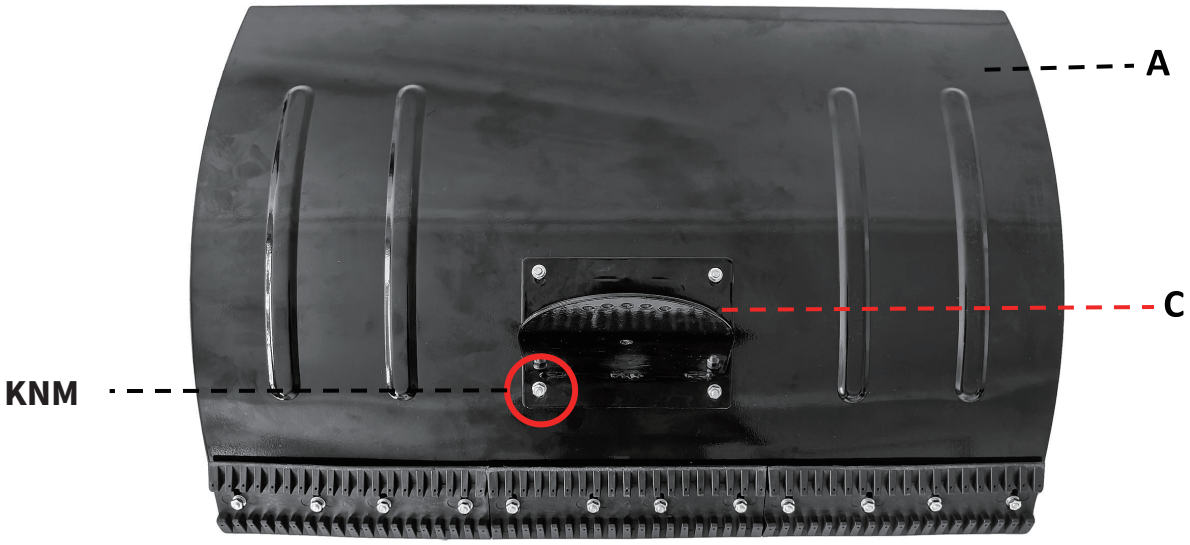

Step 3: Connect one end of the E tube with one hole to G, and the other end to F

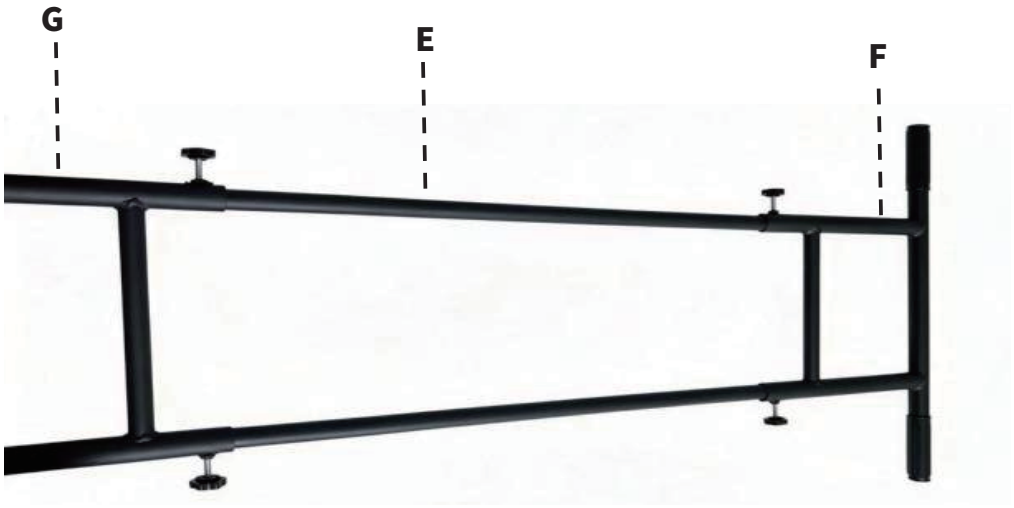

Step 4: Connect D, G, E, and F using screw I respectively.

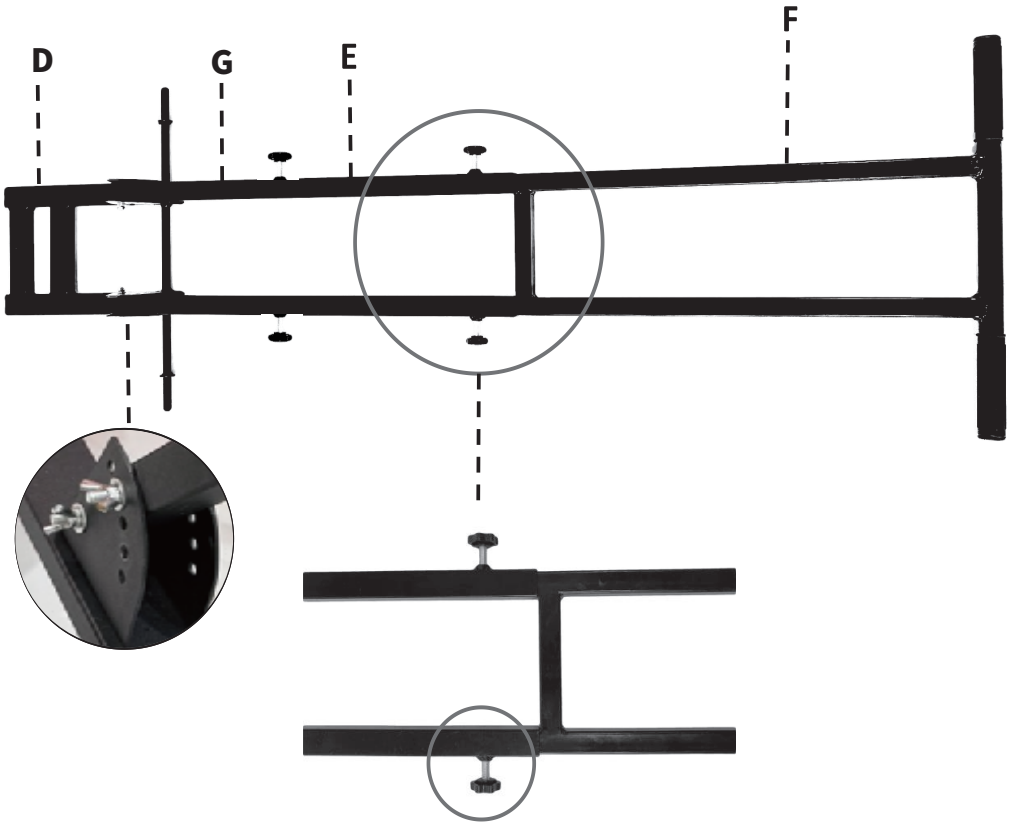

Step 5: Connect the Axle bracket **D** to the handle bracket **C** using 1 bolt/washer/spring pad/nut **JLNO**

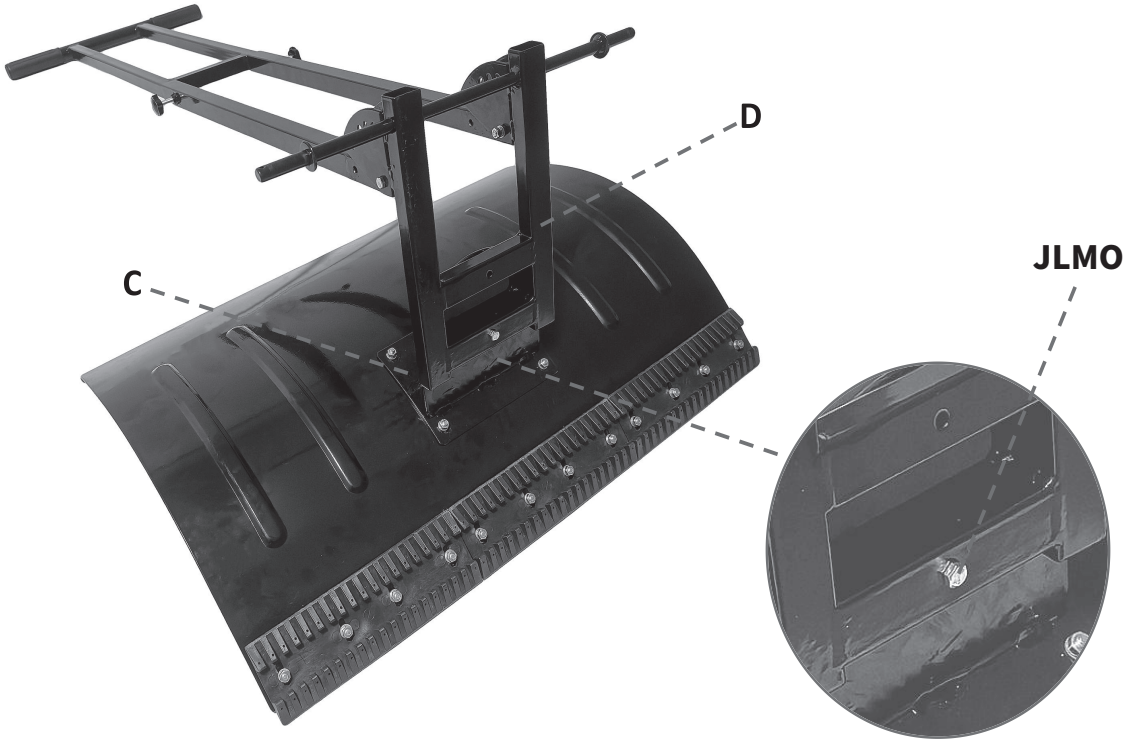

Step 6: Secure 2 wheels **H** to the axle bracket **D** using 2 Wash/Split pins **Q**

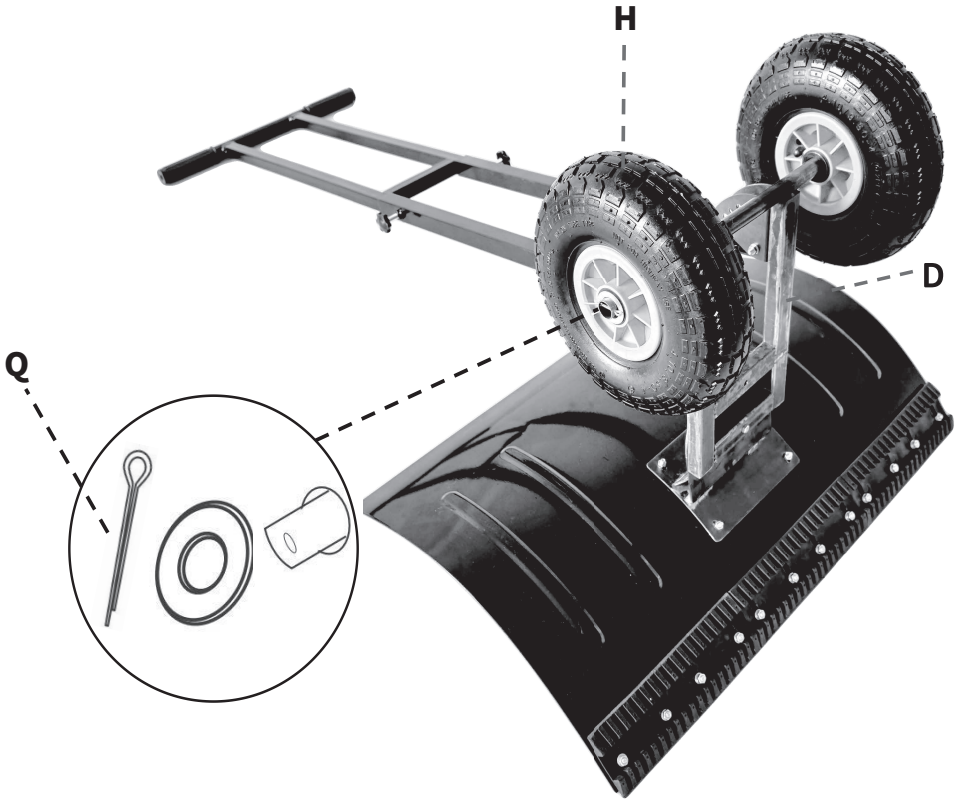

Step 7: There are 5 holes on the handle bracket that can be used to adjust the angle of the snow shovel. Find the angle you want to use and fix it with 1 bolt/washer/wing nut **JLN.** You canalso insert a quick-release pin into the hole you want for easier operation.

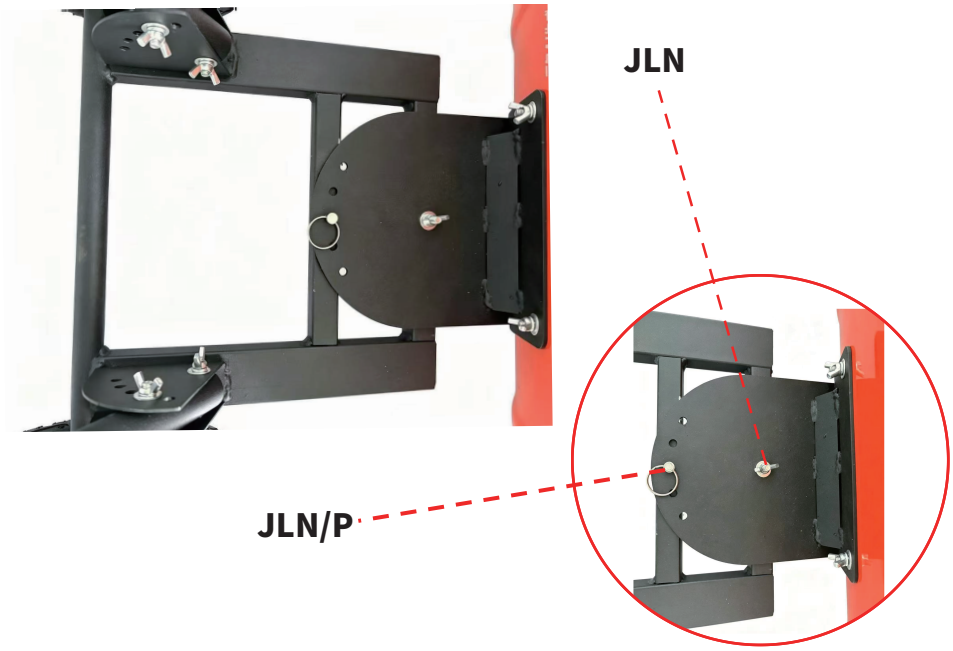

Step 8: There are 5 holes on the axle bracket for adjusting the angle of the handle. Find the angle you want to use and fix it with 2 bolts/washer/wing nuts **JLN.** You canalso insert a quick-release pin into the hole you want for easier operation.



GARVEE

support@garvee.com