USER MANUAL

PORTABLE AUTOMATIC ICE MAKER

THANK YOU FOR PURCHASING THIS PRODUCT! PLEASE READ THE INSTRUCTION CAREFULLY BEFORE USING YOUR PORTABLE ICE MAKER.

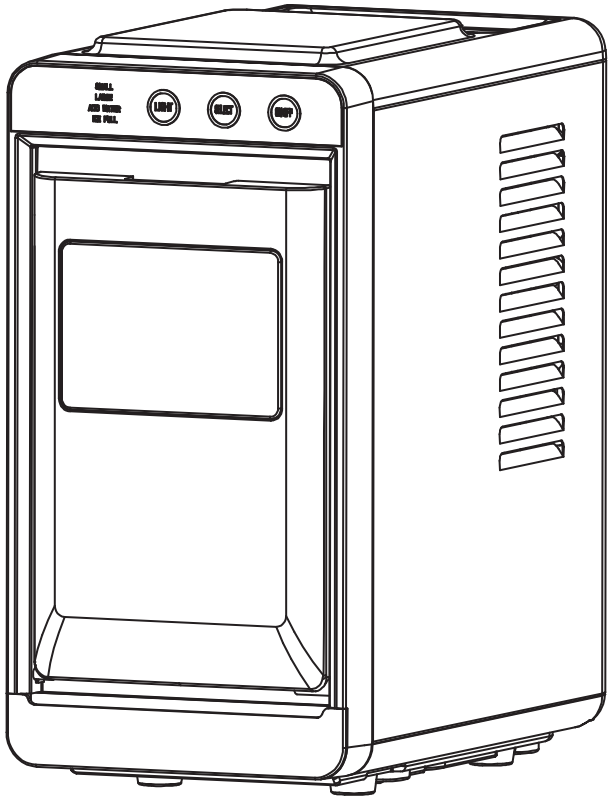

MODEL NO.: HZB-12/U

Scan the QR code to watch the product videos

Web: www.electacticshop.com

Email: service@electacticshop.com

Tel: 888-698-2504

Thank you for choosing our products as your life partner!

Our customer service is always available for you to address concerns and problems. Your satisfaction is our ultimate goal.

Choosing us, enjoying your every moment.

We persists in providing every customer with reliable products and service.

Q&A

1.How often should I clean my ice maker?

The expected frequency of cleaning ice maker depends on how often you use it. We recommend you to clean it once a week at least. But if you don’ t use the ice maker regularly, please drain all the water inside and wipe the water inside.

2.How should I clean my ice maker?

You can use clean towel to wipe the exterior and interior of the ice maker.

Because there may be scale accumulation in the internal water pipe, we recommend the use of citric acid solution for cleaning the internal water pipe of the machine. You can add a certain amount of water and neutral detergent to the sink and mix it, then long press the “ON/OFF” button for 5s to turn on the self-cleaning function. Please rest assured, the citric acid solution is not harmful to the human body, and you only need to drain the wastewater and wash it with drinking water once or twice.

3.Can I add juice, milk or other drinks to make ice?

We recommend you not do that. Because some of the ingredients in these drinks may accumulate on the pump, causing blockage of the pump and affecting normal use.

4.Why is my ice defective(Less ice or thin ice)?

Every time the machine first starts working, the refrigeration circuit of the ice machine needs to run three or four rounds to get into perfect working condition. Therefore, the first four rounds may produce less ice or thinner ice. Please don't worry, this is normal. If the situation persists after this, please contact us and we will be responsible for the defective product.

5.Why does my ice taste terrible?

If you use tap water to make ice, the taste of ice may be affected by the hardness of the water. So we highly recommend you to use drinking water or mineral water to make ice to improve the taste. If you still have this problem, please contact us to let us guard your usage experience.

6.Why is my ice so cloudy?

The transparency of the ice is affected by the quality of the water. If your ice is cloudy, it may be because the water you are using is too hard. Using water that is too hard to make ice can affect the transparency of the ice, the life of the machine, and even your health. we therefore recommend that you use better water whenever possible.

Q&A

7.Why does my ice melt so fast?

The ice maker is not a refrigerator, so the ice cannot be stored in the basket for a long period.
We recommend you to use the produced ice as soon as possible to enjoy the best taste of it.

8.Why does the ice freeze into a big block after I put it in the freezer?

Because the ice is melting, there is water on the surface when you put it in the freezer.
The water on the surface of the ice in the refrigerator condenses and sticks the ice together.
This is normal.

Please note: If you have other questions not listed here, please refer to the TROUBLESHOOTING part to solve your problem. If you are unable to get any help through this manual, please contact us, we will be happy to receive your feedback and provide satisfactory service.

TABLE OF CONTENTS

IMPORTANT SAFETY INSTRUCTIONS. 1

IMPORTANT SAFETY TIPS. 2

GETTING TO KNOW YOUR UNIT. 4

BEFORE FIRST USE. 5

CONNECTING YOUR ICE MAKER. 6

USING YOUR ICE MAKER. 7

CLEANING AND MAINTENANCE. 8

TROUBLESHOOTING. 10

IMPORTANT SAFETY INSTRUCTIONS

Your safety and the safety of others are very important.

We have provided many important safety messages in this manual and on your appliance.
Always read and obey all safety messages.
This is the safety alert symbol:



All safety messages will follow the safety alert symbol and the word “DANGER” or “WARNING”

DANGER

WARNING

These words mean:

Serious injury may occur if you don't immediately follow instructions.
All safety messages will tell you what the potential hazard is, how to reduce the chance of injury, and what could happen if the instructions are not followed.

IMPORTANT SAFETY TIPS

When using electrical appliances, basic safety precautions should be followed to reduce the risk of fire, electric shock, and injury to persons or property. Read all instructions before using any appliances.

- Do not operate this ice maker, or any other appliance with a damaged cord.
  If the supply cord is damaged, it must be replaced by the manufacturer, its service agent or a similarly qualified person in order to avoid a hazard.
  This ice maker must be positioned where the plug is accessible.
  Connect to properly polarized outlets only. No other appliance should be plugged in the outlet. Be sure that the plug is fully inserted into the socket.
- Do not run the power cord over carpeting or other heat insulators. Do not cover the cord. Keep cord away from traffic areas, and do not submerge in water.
- We do not recommend the use of an extension cord, as it may overheat and become a risk of fire. If you must use an extension cord, the cord must be of No.14 AWG with it rated watts no less than 1875W.
- Unplug the ice maker before cleaning or making any repairs or servicing.
- Exercise caution and use reasonable supervision when the appliance is used near children.
- Do not use your ice maker outdoors. Place the ice maker away from direct sunlight and make sure that there is at least 4 inches of clearance between the back of your unit and wall. The minimum clearance from each side of the unit must be no less than 4 inches.
- Do not use any liquid other than water to make the ice cube.
- Do not clean your ice maker with flammable fluids. The fumes can create a fire hazard or explosion.
- Do not flip over.
- If the ice maker is brought in from outside in winter time, give it a few hours to warm up to room temperature before plugging it in.
- WARNING : This appliance must be earthed.
-  DANGER - Risk Of Fire Or Explosion. Flammable Refrigerant Used. Do Not Use Mechanical Devices To Defrost Ice Maker. Do Not Puncture Refrigerant Tubing.
-  DANGER - Risk Of Fire Or Explosion. Flammable Refrigerant Used. To Be Repaired only By Trained Service Personnel. Do Not Puncture Refrigerant Tubing.

-  CAUTION – Risk Of Fire Or Explosion. Flammable Refrigerant Used. Consult Repair Manual/Owner’ s Guide Before Attempting To Install or Service This Product. All Safety Precautions Must be Followed.
-  CAUTION – Risk Of Fire Or Explosion. Disposal Of Property In Accordance With Federal Or Local Regulations. Flammable Refrigerant Used .
-  CAUTION – Risk Of Fire Or Explosion Due To Puncture Of Refrigerant Tubing; Follow Handling Instructions Carefully. Flammable Refrigerant Used.
- The ice maker should be installed in accordance with the safety standard for Refrigeration Systems, ASHRAE15. The ice maker shall not be installed in corridors or hallways of public buildings.
- If problems that need servicing occur, such as the replacement of some components, the servicing shall be done by service personnel authorized by the factory to minimize the risk of possible ignition due to incorrect components or improper service.

IMPORTANT:

The wires in this main lead are colored in accordance with the following code:

Green or Green with a yellow strip:	Grounding
White:	Neutral
Black:	Live

To avoid a hazard due to instability of the appliance, it must be placed on an even or flat surface.

GETTING TO KNOW YOUR UNIT

General Introduction

1. Control panel
2. Ice basket
3. Transparent window
4. Flip door
5. Drip tray
6. Water drain cap
   (at front bottom side of the unit)
7. Limit panel
8. Evaporator
9. Air exhausting
10. Ice scoop

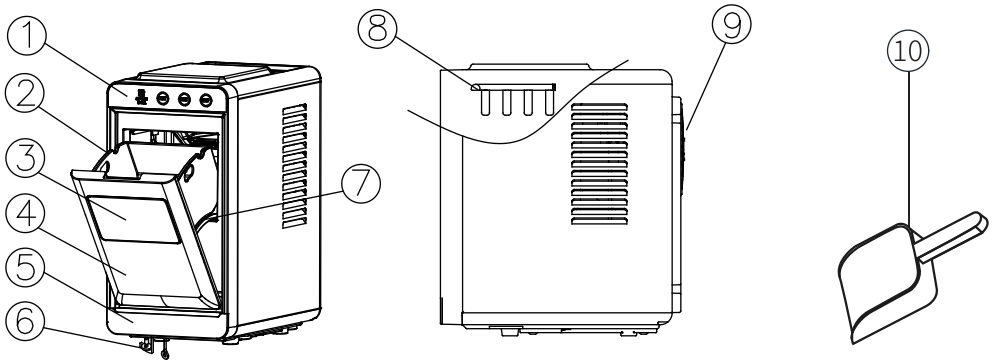

Control Panel Introduction

A. Ice cube size displaying

B. Water shortage indicator

C. Ice full indicator

D. Interior light button

E. Button to select ice cube size

F. Button to turn on/off the unit

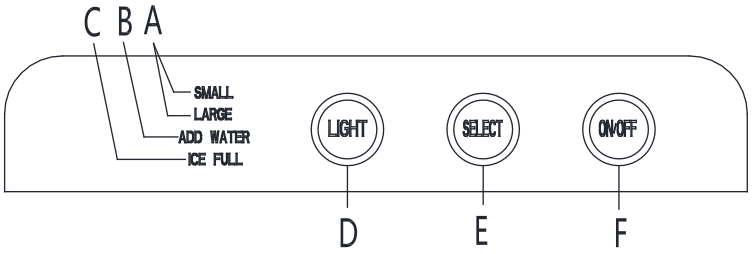

BEFORE FIRST USE

1. Please remove the exterior and interior packaging first,and then check the included accessories.Please contact our customer service if any accessories are missing.

2. Remove all the tapes on the unit and take out all accessories inside of it.

3. Clean the unit with lukewarm water and a soft cloth.

4. Place your ice maker on a horizontal counter top that is far from direct sunlight and other heating sources.
Please make sure there's at least 4 inches between your ice makers and walls.

5. Allow at least 6 hours for the refrigerant fluid to settle before plugging the ice maker in.

6. The appliance must be positioned so that the plug is accessible.

7. For your health, please pre-clean the machine with water before your first use. After adding the water, press “ON/OFF” button for more than 5 seconds to enter the Self-cleaning program and runs for about 30 minutes. After cleaning, drain the water thoroughly.

8. In order to enjoy your ice and warranty better, please do not make ice with drinks, juices, milk, etc, which may cause irreversible damage to your ice maker.

CONNECTING YOUR ICE MAKER

⚠ DANGER

*** Improper use of the grounding plug can result in the risk of electrical shock. If the power cord is damaged, please call our customer service.**

1. This unit should be properly grounded for your safety. The power cord of this appliance is equipped with a three-prong plug which matches with standard three-prong wall outlets to minimize the possibility of electric shock.

2. Plug your appliance into a specialized grounding wall outlet that is properly installed. Do not, under any circumstances, cut or remove the third (grounding) prong from the power cord. Any questions concerning power and/or grounding should be directed toward a certified electrician.

3. This appliance requires a standard 110-120 volt, 60Hz electrical three-prong grounding outlet.

USING YOUR ICE MAKER

1. Open the cover, remove the ice basket and pour water into tank to the MAX level (about 0.8L).

2. Press “ON/OFF” button to begin the ice making cycle.

3. Select the ice cube size by pressing the “SELECT” button. If the room temperature is lower than 60℉, it is recommended to select small ice cube in order to avoid ice sticking together.

4. The ice making cycle lasts approx. 6 to 13 minutes, depending on the selection of ice cube size and the room temperature. The recommended room temperature is 50-105℉.

5. If the water pump can’t inject water, the ice maker will stop automatically, and the “ADD WATER” indicator will be on. Press “ON/OFF” button, fill water up to the MAX level and press “ON/OFF” button to turn on the unit again. Allow the refrigerant liquid inside the compressor at least 3 minutes to settle before restarting.

6. The ice maker stops when the ice basket is full and the “ICE FULL” indicator will be on.

   Warning: Direct sunlight or sunlight reflection may cause infrared sensor malfunction. If the unit doesn’t stop even ice cubes obstruct sensor, move the unit where no sunlight.

7. Change water in the water reservoir every 24 hours to ensure a reasonable hygiene level. If unit isn’t to be used, drain all the water and dry the tank.

WARNING: Fill with potable water only. Only use drinking water.

CLEANING AND MAINTENANCE

General Cleaning And Maintenance

1. Use the water to rinse the inside parts, and drain out the water by unplugging the drain cap on front bottom side.

2. The outside of the ice maker should be cleaned regularly with a mild detergent solution and warm water.

3. To protect your health and avoid the mold, when the unit is not to be used for a long period, please drain all the water totally and dry the interior and exterior with a clean soft cloth.

CLEANING AND MAINTENANCE

Descaling Instructions

1. Add an appropriate amount of citric acid, white vinegar or professional descaler.
2. Add an appropriate amount of water.
3. Let it sit for 30 minutes.
4. Plug on the unit, press “ON/OFF” button for more than 5 seconds to enter the Self-cleaning program and runs for about 30 minutes. The “SMALL”, “LARGE” indicators flash in turn during cleaning.
5. After cleaning, drain the water through the drainage outlet at the bottom of the machine.
6. To avoid affecting the taste of your ice, please repeat above steps for 2-3 times with potable water to thoroughly clear the residual odor and liquid.

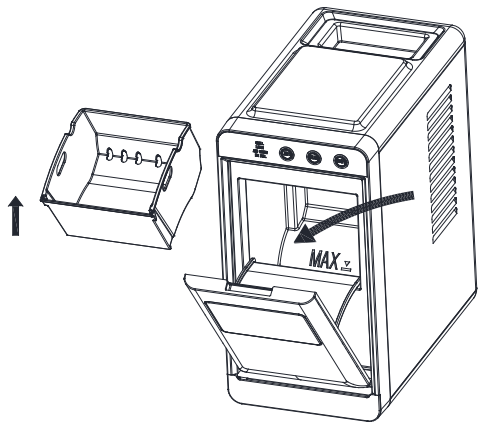

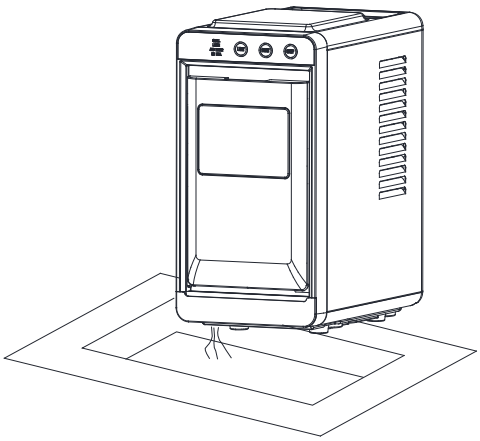

TROUBLESHOOTING

PROBLEM	POSSIBLE CAUSE	SOLUTION
ADD WATER indicator is on.	Lack of water.	Stop the ice maker, fill water, and press the "ON/OFF" button again to restart the unit.
ICE FULL indicator is flashing.	Ice cubes get jammed.	Remove ice in ice basket, press the "ON/OFF" button to make ice again. The machine will resume making ice automatically.
ICE FULL indicator is on.	Ice is full in basket.	Remove ice from ice basket. Continuous press "Select" button 5 seconds, the unit could make ice 10 cycles even "ICE FULL" indicator is on.
Ice cubes stick together.	The ice making cycle is too long.	Select the small size ice cube selection.
	Water temperature in inner tank is too low.	Water temperature recommended is at 40-90°F.
Ice making cycle is normal but no ice formed.	Room temperature or water temperature in inner tank is too high.	The room temperature should be at 50-105°F, water temperature should be at 40-90°F.
	Refrigerant in cooling system leaks.	Verify by a qualified technician.
	Pipe in the cooling system is blocked.	Verify by a qualified technician.

ROWAN ELECTRIC APPLIANCE LLC

8:30am-5:30pm P.S.T.
Monday to Friday

Web: www.electacticshop.com

Email: service@electacticshop.com

Tel: 888-698-2504