HOROW

B0501H Rasied Toilet Seat

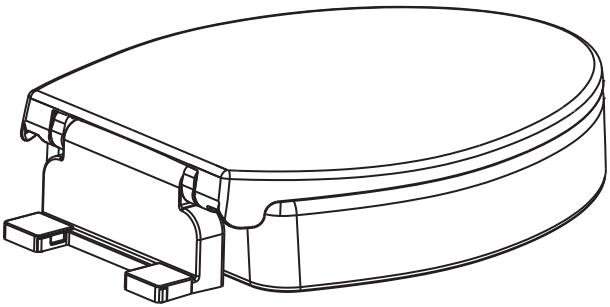

Made in China

www.horow.com | (+1)209-200-8033 | support@horow.com

Product accessories explosion

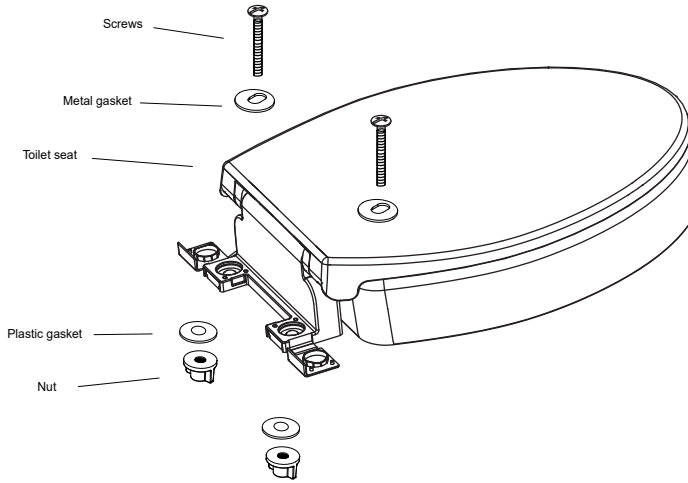

Maintenance Instructions

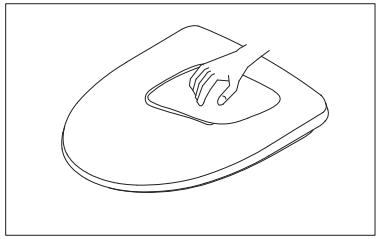

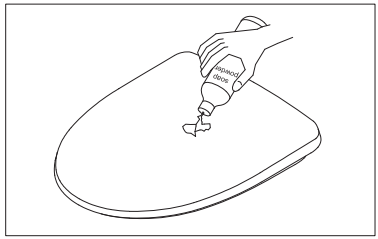

1. Periodical maintenance

- Wash the toilet seat with soft wet cloth.
- Dry with soft dry cloth.

2. Removal of stains

- Use neutral detergent(e.g. soap powder) to wipe softly, then dry with clean cloth.
- Do not use eradicator, abrasive powder, diluent, volatile oil, acid or alkali liquid detergent and nylon brush to clean the product, to avoid damage.

Thank you for choosing our product.

Please read carefully the following installation instructions in order to avoid component damage or injury to the installer.
Keep the installation manual available for future maintenance or reference.

⚠ PRECAUTIONS: Follow all safety precautions to avoid bodily injury or damage to property.

⊘ "Prohibited activities"

⚠ PRECAUTIONS	⊘ ·Do not stand or place heavy objects on the seat cover. The weight could damage the seat and cove and may cause fall.	
	⊘ ·Do not use strong abrasive cleansers, as they will scratch and dull the surface. Clean the outside surface of your toilet seat with mild soap water. Wipe the entire surface completely dry with a clean and soft cloth.	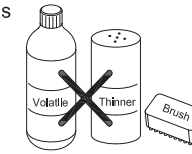
	⊘ ·Keep children out of reach of the seat, to avoid body injury.	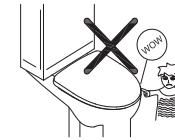

Care Instructions

Do not open/close the seat cover using excessive force. (Doing so may cause cracks or failure of performance.)

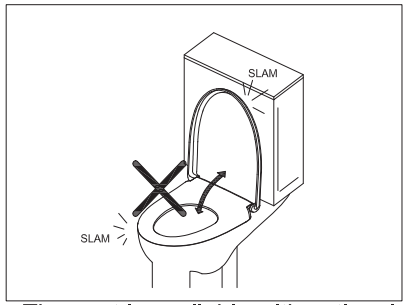

Do not expose the product to direct sunlight. (Doing so may cause color fading.)

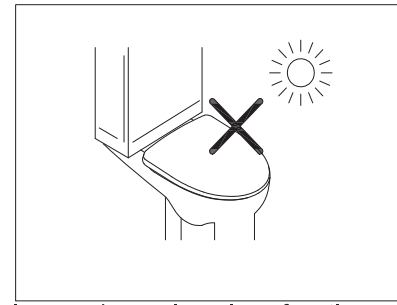

- The seat is available with optional slow close and non slow close function.

※ The closing speed of seat with slow close function can vary with the changing of room temperature and use cycles.

※ The seat without slow close function should be opened manually to fully open position or fully closed position to avoid injuries.

Installation instructions

① Open the plastic cover.

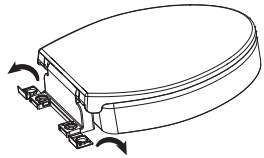

② Adjust to fit ceramic well.

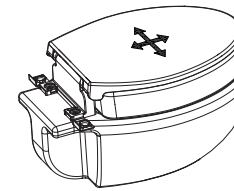

③ Tight the screw then fix seat.

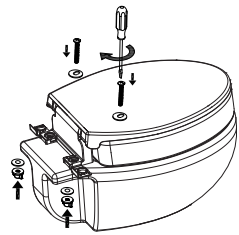

④ Close the plastic cover.

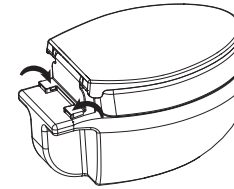

⑤ Loosen foot mat screw two turns

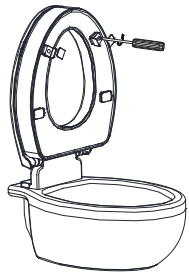

⑥ Adjust the foot pad to fit the ceramic

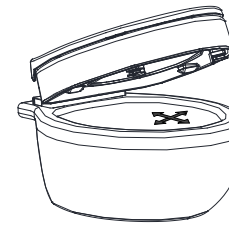

Installation instructions

⑦ Lock the foot cushion screws

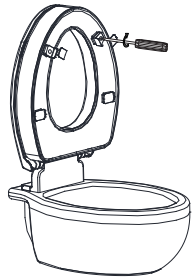

⑧ Put on a soft rubber pad.

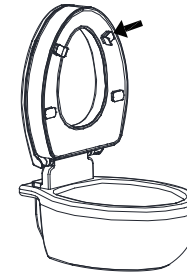

Quick release function

① Open the plastic cover.

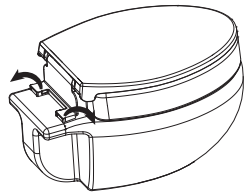

② Move forward the toilet seat and it could be quick release.

