Curved Baluster Railing Systems

CODE COMPLIANT RAILING FOR YOUR LIFESTYLE



Care and Maintenance

While most powder coat finishes are tougher and much more flexible than conventional solvent based paints, they are about the same hardness as automotive paint and can scratch. To clean a powder coated surface, use the same care and methods you would use to clean your car. Gently wash with a clean, soft cloth and a mild detergent followed by a clear water rinse. Even though most powder coatings are highly resistant, certain solvents can harm them. Avoid contact with nail polish remover, paint or lacquer thinner, motor oils, transmission and brake fluids or solvent based cleaning fluids. If any of these should contact the powder coated surface, immediately wipe the area with a soft, clean cloth, and wash as described above.

Congratulations!

You are on your way to a maintenance free handrail system that is easily assembled and installed. With your system, you'll feel safe being protected by the tremendous strength of its aluminum alloy components, plus be comforted knowing the hardened powder coated finish will last year after year.

Please take a moment to read the instructions before you begin assembling your project.

Contents

Contents/Introduction	2
Tools You Will Need *(not included)*	3
Curved Baluster Railing Components	4
Curved Baluster Railing Assembly Overview	4
Illustrated Curved Baluster Railing Components	4
Post Installation with Welded Base Plate	5
Pre-Sizing Top and Bottom Rails	6
Top and Botttom Rail Assembly	6
Baluster Infill Spacing	7
Installing Balusters	7
Determining Baluster Spacing	8-12
Care and Maintenance	BC

Please take a moment to read the instructions before you begin assembling your railing.

Introduction

Check the contents of Handrail box with these instructions to verify all parts are present. This will allow you to become familiar with the components of your new Handrail system.

- Inspect all component parts for familiarity
- Layout recommended tools
- Before cutting any component, know its use – "measure twice and cut once"
- The included concrete fasteners are for brick and concrete

Handrail shown with Posts and Base Covers sold separately.

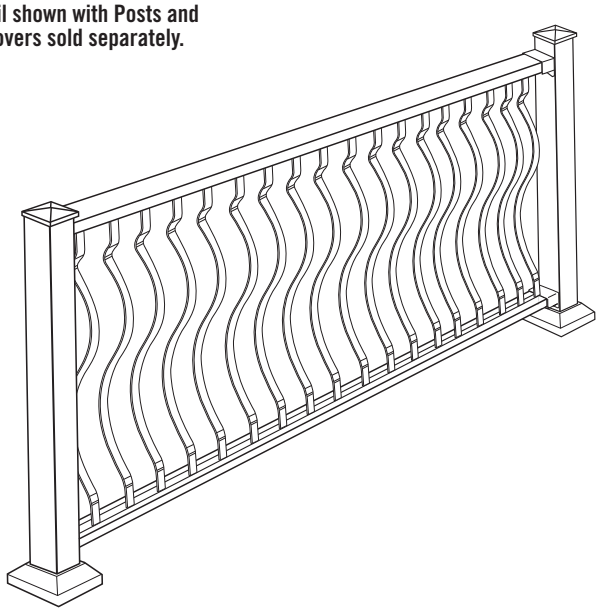

Method 3:

Mathematical equation to determine baluster spacing:

Post to post inside dimension – # of pickets / (# of pickets + 1)

Use chart from *Method 1* to determine # of pickets

Use the chart below to determine the fractional measurement from the decimal calculation.

Fraction/Decimal

1/64	0.0156	33/64	0.5156
1/32	0.0313	17/32	0.5312
3/64	0.0469	35/64	0.5469
1/16	0.0625	9/16	0.5625
5/64	0.0781	37/64	0.5781
3/32	0.0937	19/32	0.5937
7/64	0.1094	39/64	0.6094
1/8	0.1250	5/8	0.6250
9/64	0.1406	41/64	0.6406
5/32	0.1562	21/32	0.6562
11/64	0.1719	43/64	0.6719
3/16	0.1875	11/16	0.6875
13/64	0.2031	45/64	0.7031
7/32	0.2187	23/32	0.7187
15/64	0.2344	47/64	0.7344
1/4	0.2500	3/4	0.7500
17/64	0.2650	49/64	0.7656
9/32	0.2812	25/32	0.7812
19/64	0.2969	51/64	0.7969
5/16	0.3125	13/16	0.8125
21/64	0.3281	53/64	0.8281
11/32	0.3437	27/32	0.8437
23/64	0.3594	55/64	0.8594
3/8	0.3750	7/8	0.8750
25/64	0.3906	57/64	0.8906
13/32	0.4062	29/32	0.9062
27/64	0.4219	59/64	0.9219
7/16	0.4375	15/16	0.9375
29/64	0.4531	61/64	0.9531
15/32	0.4687	31/32	0.9687
31/64	0.4844	63/64	0.9844
1/2	0.5000	1	1.0000

Method 2:

Use the **"On Center"** Baluster Spacing calculator at **decks.com:**

http://www.decks.com/calculators/baluster-spacing

Important Note: Baluster width is 1"

Input:

Baluster Width

Custom Width

inches: 1 + fraction: 0

Space Width

inches: 3 + fraction: 3/4

Sections (post to post)

Section A Width — inches: 72 + fraction: 0

Section B Width — inches: 0 + fraction: 0

Disregard Section B

Results:

Result

Total Balusters Needed: **15**

Section:A

Section Width: **72**"
Center Point: **36**" (balusters centered)
Balusters Needed: **15**
Outside Space: **2-1/4**"

On Center Measurements (left to right)
2-3/4", 7-1/2", 12-1/4", 17", 21-3/4", 26-1/2", 31-1/4",
36", 40-3/4", 45-1/2", 50-1/4", 55", 59-3/4", 64-1/2", 69-1/4"

Section:A

Section Width: **0**"
No Balusters Needed

Tools You Will Need

(not included)

- **A** - Level
- **B** - Chop Saw (60 tooth wood blade)
- **C** - Safety Glasses
- **D** - 1/4" Hex Bit Driver
  5/16" Hex Bit Driver
- **E** - Tape Measure
- **F** - Screw or Impact Gun
- **G** - Pencil
- **H** - Drill Bits: 1/8" wood, 1/4" wood, 1/4"x 3.5"concrete, 3/16" metal
- **I** - (2) pcs 10" 2 x 4 lumber to support railing during installation (optional)
- **J** - Ear Protection
- **K** - Automatic Center Punch or Awl
- **L** - Masking/Painters Tape

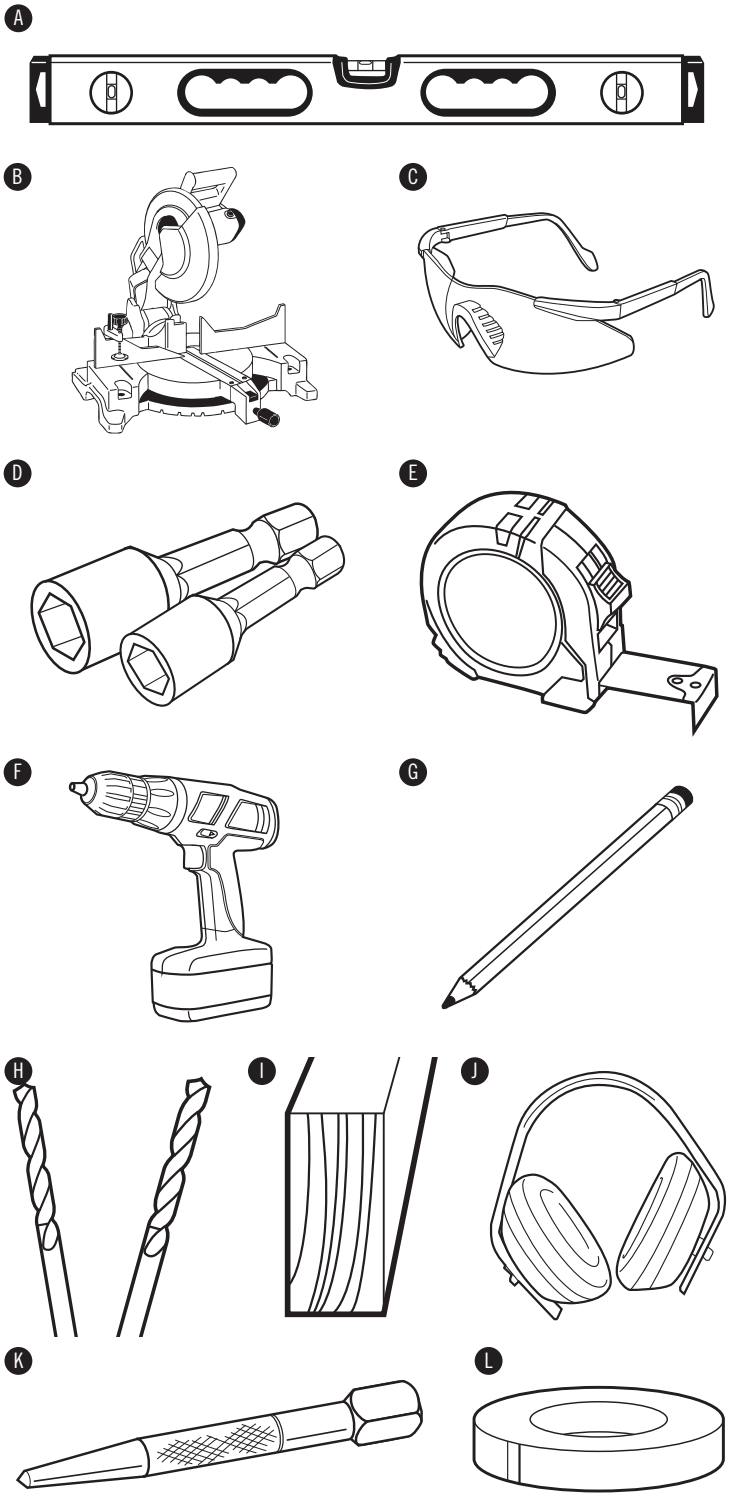

For assistance call Madden Manufacturing
573-365-7085

Curved Baluster Railing Box Contents

Curved Baluster Railing Components

(**2**) Top & Bottom Rails (A&B are identical)
(**4**) Rail Mounting Brackets (C)
(**15, 20**) Curved Balusters (D) *15 for 6', 20 for 8' kit*
(**50, 60**) 7/8" Self Tapper (E) *50 for 6', 60 for 8' kit*
(**2**) 3 3/4" Spacer (F)
(**8**) 2 1/4" Tapcons (G) *for masonry install*
(**8**) 2" SMS Fasteners (H) *for wood install*

Curved Baluster Railing Assembly Overview

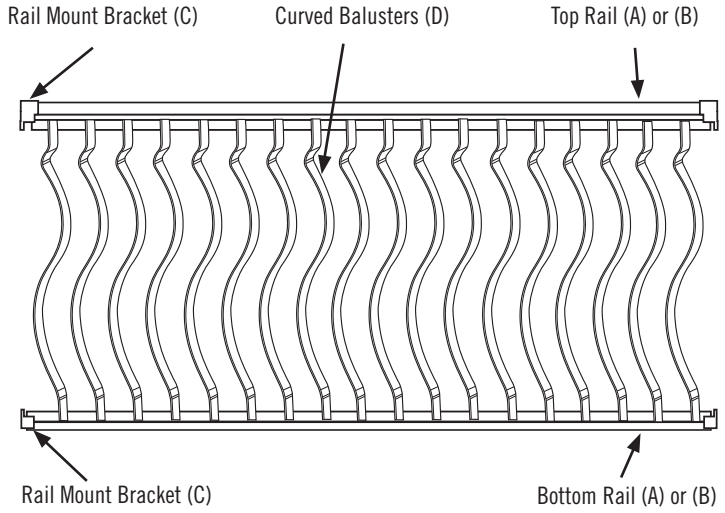

Illustration #1

Curved Baluster Handrail installed heights are 36" for residential and 42" for commercial. Always start installation at the midpoint of the handrail section.

Note: Posts heights are 38" for residential railing and 42" for commercial railing (sold separately). ADA compliant handrails are available for this system. Visit website for more information.

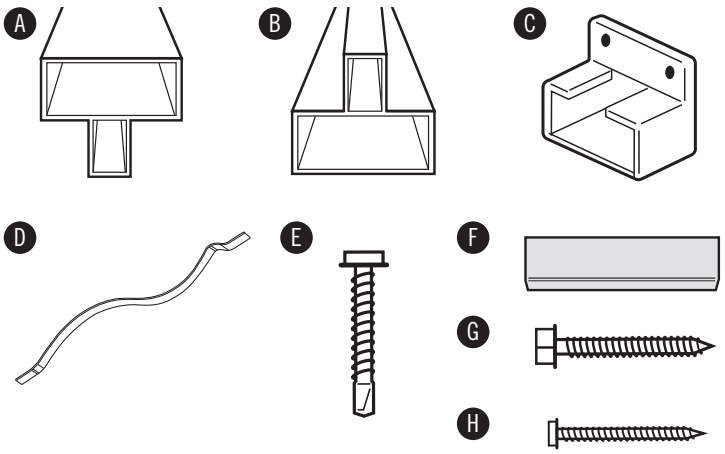

Table A

Rail Length	Approximate Outside Space	Approximate Baluster Spacing	# Pickets Required
96	3 9/16	3 5/8	20
94	3 3/4	3 1/2	20
94	3 3/4	3 3/4	19
92	3 7/8	3 5/8	19
90	2 7/8	3 5/8	19
88	3 1/8	3 3/4	18
86	2 1/8	3 3/4	18
84	3 1/4	3 1/2	18
82	2 1/2	3 3/4	17
80	3 1/2	3 1/2	17
78	2 1/2	3 1/2	17
76	3 3/4	3 1/2	16
74	2 3/4	3 1/2	16
72	3 1/8	3 5/8	15
70	3	3 1/2	15
68	3 3/4	3 1/4	15
72	3 1/8	3 5/8	15
70	3	3 1/2	15
68	2 7/8	3 3/8	15
66	3 1/4	3 1/2	14
64	3 1/16	3 3/8	14
62	3 1/2	3 1/2	13
60	2 1/2	3 1/2	13
58	3 3/4	3 1/2	12
57	2 3/4	3 1/2	12
56	3 3/4	3 3/4	11
54	2 3/4	3 3/4	11
52	3	3 1/2	11
50	3 1/8	3 3/4	10
48	3 1/4	3 1/2	10
46	3 3/8	3 1/4	10
44	3 1/2	3 1/2	9
42	3 1/2	3 1/4	9

For assistance call Madden Manufacturing 573-365-7085

APPENDIX A:

Determining Uniform Baluster Spacing
(3 Possible Methods):

We all approach construction in different ways, so we included three possible methods for determining your baluster spacing: table of measurements, the decks.com website calculator that provides "on center" measurements, and a mathematical equation.

Method 1:

Table of measurements and illustration of measurement locations:

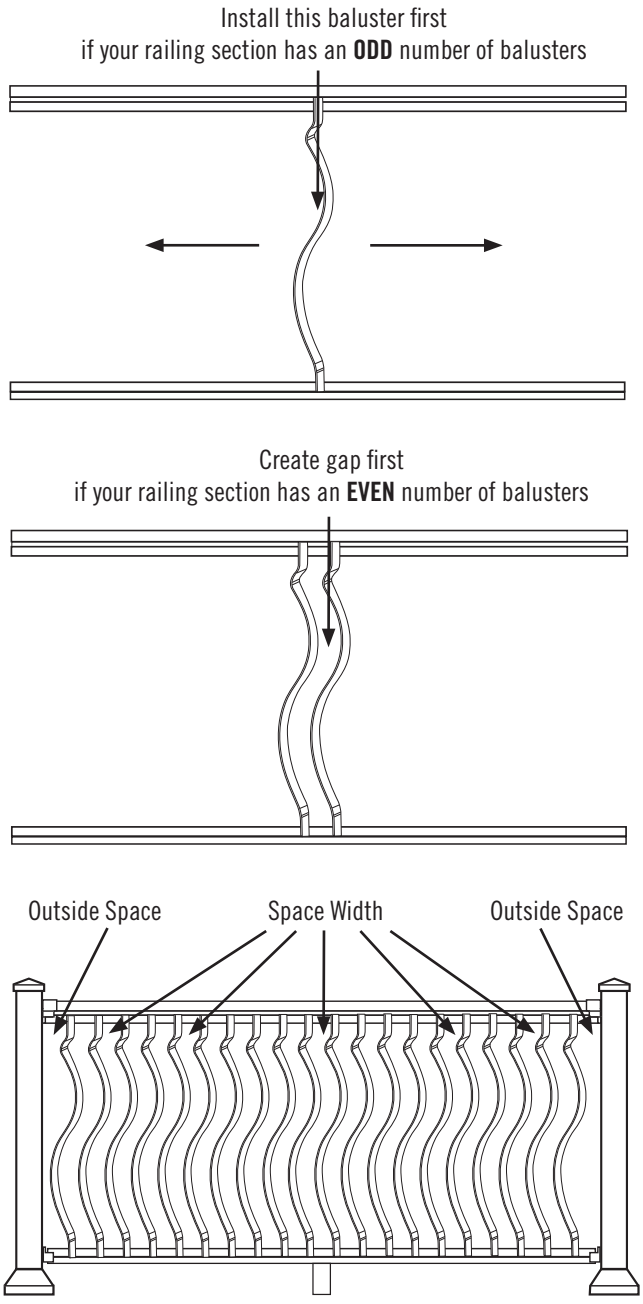

Post Installation with Welded Base Plate

Start by ensuring that you have a solid and level mounting surface for your post(s). Washers or galvanized/stainless metal shims (not included) may be used to plum posts.

Post Mounts are installed with railing sections in later steps. Mounts shown for informational purpose only in this step.

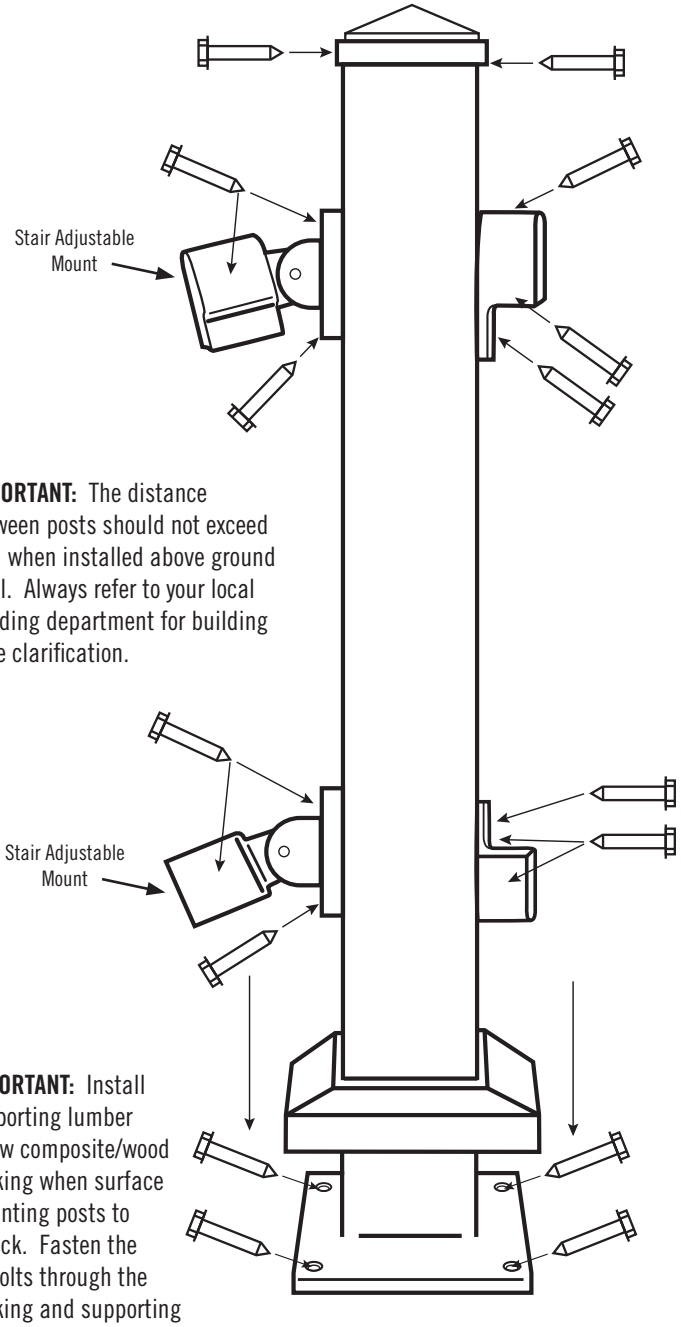

IMPORTANT: The distance between posts should not exceed 6 ft. when installed above ground level. Always refer to your local building department for building code clarification.

IMPORTANT: Install supporting lumber below composite/wood decking when surface mounting posts to a deck. Fasten the 4" bolts through the decking and supporting underside lumber with the provided tee nuts.

Note: When installing the post base into ACQ lumber, use stainless steel bolts (not included)

Assembly Instructions

Pre-sizing and Cutting Top and Bottom Rails (prior to assembly):

1. Measure the distance between your posts from the inside edge of the post to the inside edge of the other post. Ensure the measurement is the same at the top and at the bottom of the posts **(Illustration #1)**. If the measurements are different, your posts may not be level and may need to be shimmed.

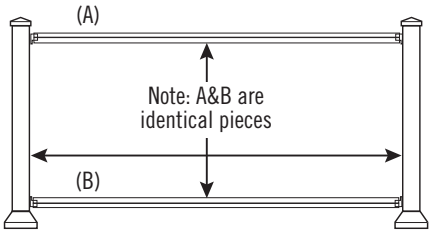

Illustration #1

2. Cut both top and bottom rail sections ½" shorter than your measurements, assuring they will pass between the posts without scratching the post's surface during installation.

Top and Bottom Rail Installation:

1. Place a short cut of 2"x4" lumber on edge near each post perpendicular to the railing direction. **(Illustration #2)**
2. Slide mounting brackets (C) on each end of the bottom rail.
3. Set the bottom rail section (with brackets on each end) onto the 2"x4"'s and between the posts. The 2x4's will provide the proper 3 1/2" gap below the bottom rail.

Illustration #2

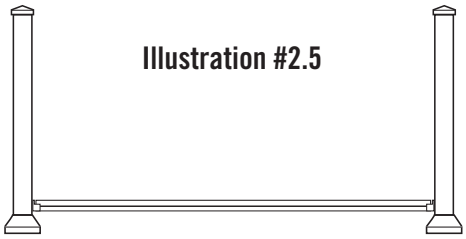

Illustration #2.5

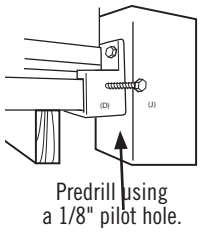

Spacing is not to exceed 3 3/4" from the bottom rail to the deck.

Illustration #3

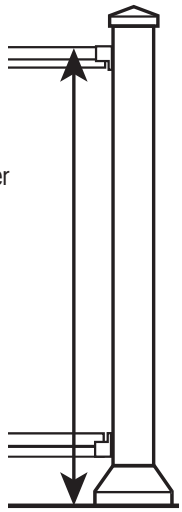

4. Centering the bottom rail bracket from each edge of the post, fasten it using the 7/8" self-drilling fasteners (E) for EZ Posts or 2" SMS fasteners (F) for wood posts.**IMPORTANT:** Once the brackets are secure on the posts, fasten the bracket and rail together using a 7/8" self-drilling fastener. Drilling a pilot hole with an 1/8" bit and fastening on the non-visible side is preferable. (**Illustration# 2).**
5. Measure from the decking up the post to 36 ¼" for residential and 42 ¼" for commercial railing make a pencil mark at the center of the post. Repeat process at the opposite post. **(Illustration #3)**
6. Slide mounting brackets onto both ends of your top rail (flat surface up) and hold the top of the top rail in place at your pencil marks. **(Illustration #3.5)**
7. Using a baluster (C) test that the vertical spacing between the rails, allows the baluster fasteners holes to center on the railing fastener line. **(Illustration #4)**

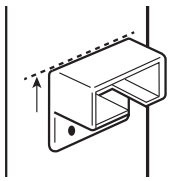

Illustration #3.5

www.maddenmetals.com

8. Holding the top of the bracket at your pencil mark, level the top rail and fasten each bracket to your posts using the appropriate fasteners provided (same fasteners as the bottom rail). **(Illustration #5)**
9. Once the brackets are secure on the posts, fasten the bracket and rail together using a 7/8" self-drilling fastener. Drilling a pilot hole with an 1/8" bit and fastening on the non-visible side is preferable.

Illustration #4

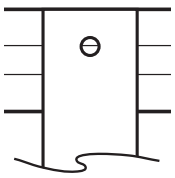



Illustration #5

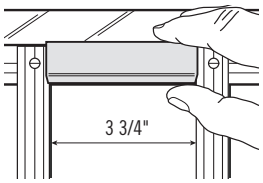

Illustration #6

Baluster Infill spacing:

To determine symmetric baluster spacing for your railing section, REVIEW APPENDIX A and follow the steps below.

1. Determine your preferred baluster spacing from Appendix A. We recommend using ***Method 2:*** Decks.com Baluster Calculator www.decks.com/calculators/baluster-spacing. Also, we recommend the "space width" (distance between balusters) to be 3 ¾". However, if this causes the "outside space" to be greatly different than the baluster spacing, try smaller spacing calculations for a more uniform look (e.g. 3 1/2"). **(Illustration #6)**
2. If your baluster spacing is different than 3 ¾", cut the included Spacer (F) to your new spacing width.
3. Using the results from your decks.com calculations and the Spacer (F), temporarily space the balusters to verify the overall layout. Start by stretching your tape measure across entire bottom rail.
4. Make on-center marks (from decks.com calculator) or use small pieces masking/painters tape on the top vertical leg of the bottom rail from left to right.
5. Verify if there are any height variations of the balusters. This is common. Move the shorter length balusters to the middle locations as they will be installed first.

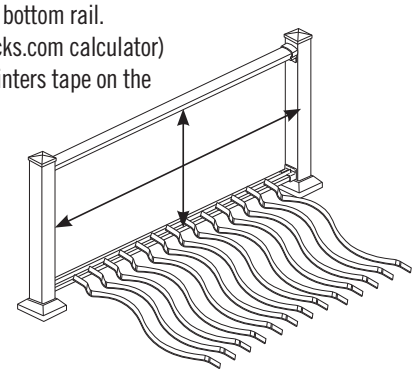

Illustration #6.5

Installing the balusters:

1. Place the middle (shortest baluster) in its on center mark spaced location and in between the top and bottom rails.
2. At the bottom hole of the baluster, mark the center of the fastener hole using a punch or awl.
3. At your punch mark, drill a 3/16" pilot hole into the bottom rail using the included drill bit.
4. Secure the baluster to the bottom rail using a 5/16" hex bit and a 7/8" fastener (E).
5. Level the baluster vertically. Double check with a horizontal measurement from the post to the edge of baluster at the top and bottom rails.
6. Set next baluster in place to the left using the Spacer (F). Use the Spacer at both the top and bottom rail.
7. Verify baluster is aligned with the on-center marks on the bottom rail.
8. Punch bottom fastener location, drill pilot hole and secure bottom of baluster with fastener.
9. Punch top fastener location, drill pilot hole and secure top of baluster with fastener.
10. Repeat installing balusters on the left side and repeat from middle to the end of the right side.

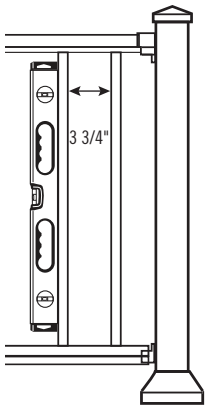

Illustration #7

For assistance call Madden Manufacturing

573-365-7085