Widespread Lavatory Faucet With Retail Pop-Up

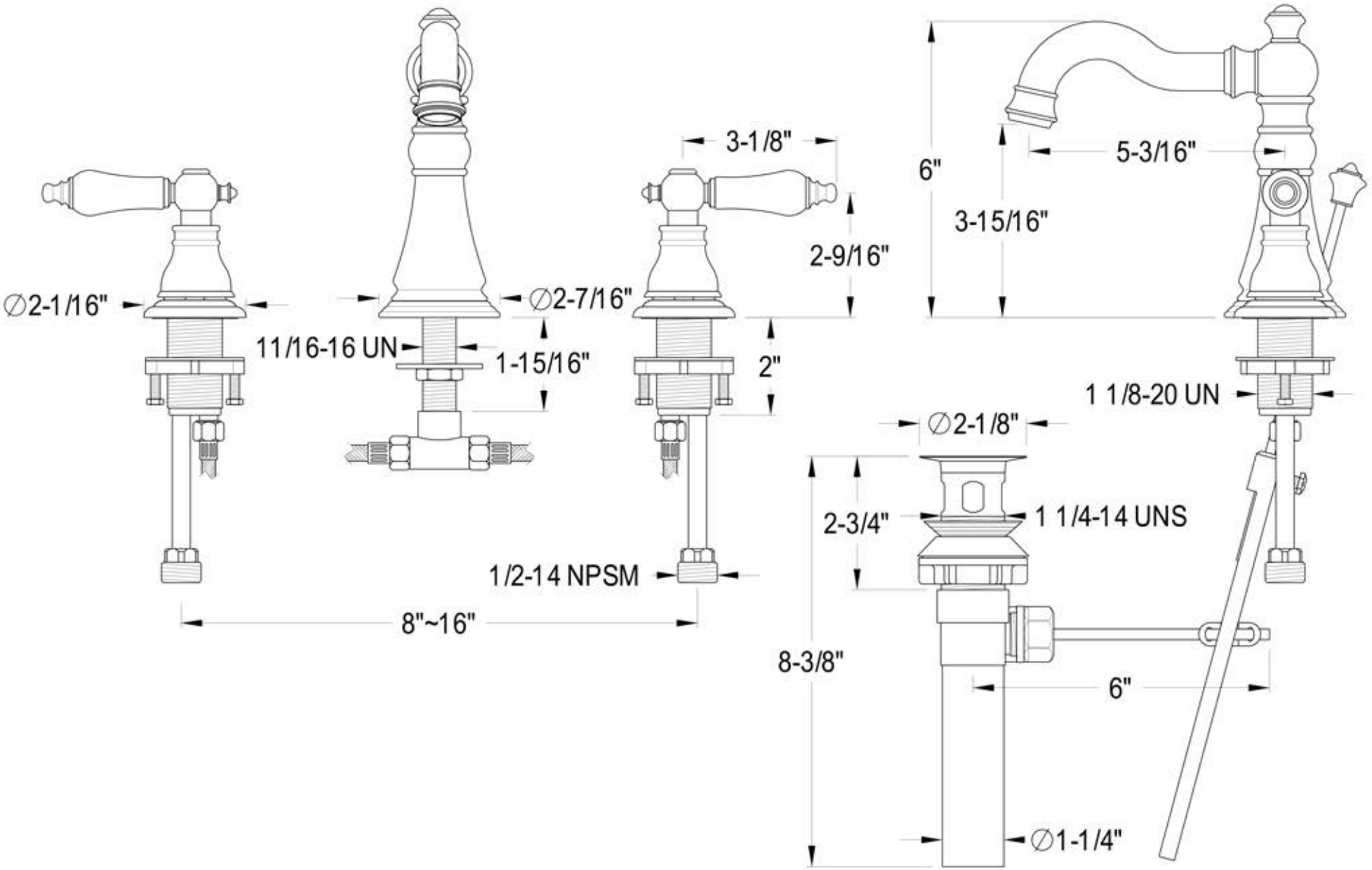

2017-12-A