HOUSEHOLD FREEZER

User Manual

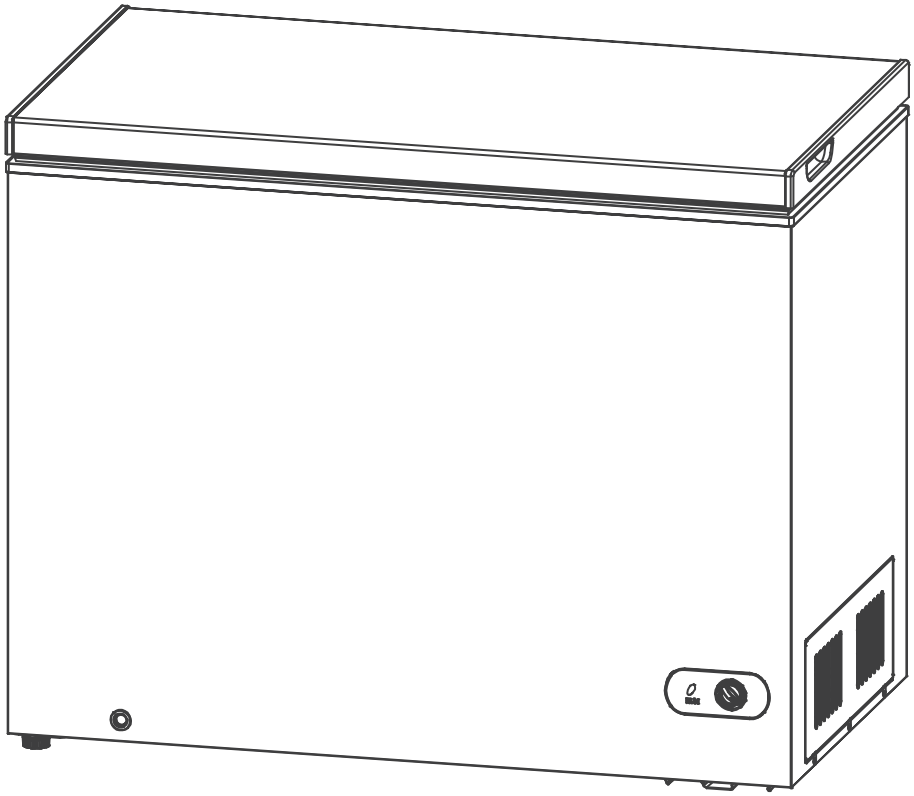

Model No.: BD-285C

Thank you for purchasing this product! Please read the instructions carefully before using your product. If you have any questions about the product, please contact us via customer service.

Scan the QR code to watch the product videos

Web: www.electacticshop.com

Email: service@electacticshop.com

Tel: 818-531-2784

IMPORTANT SAFETY INSTRUCTIONS

⚠ WARNING To reduce the risk of fire, electrical shock, or injury follow these basic precautions when using your refrigerator.

1) WARNING----Keep ventilation openings, in the appliance enclosure or in the built-in structure, clear of obstruction.
2) WARNING----Do not use mechanical devices or other means to accelerate the defrosting process, other than those recommended by the manufacturer.
3) WARNING----Do not damage the refrigerant tubing to reduce the risk of a leak when handle, move and use of refrigerator.
4) WARNING----Do not use electrical appliances inside the food storage compartments of the appliances, unless they are of the type recommended by the manufacturer.
5) WARNING----DANGER: Never allow children to play with, operate, or crawl inside the refrigerator. Risk of child entrapment. Before you throw away your old refrigerator or freezer:
   - Take off the doors.
   - Leave the shelves in place so that children may not easily climb inside.
6) The appliance has to be unplugged before carrying out user maintenance on the appliance.
7) This appliance can be used by children over the age of 8 and people with reduced physical sensory or mental capabilities or lack of experience and knowledge if they have been given supervision or instruction concerning use of the appliance in a safe way and understand the hazards involved. Children should not play with the appliance. Cleaning and maintenance should not be made by children without supervision.
8) If the component part is damaged, it must be replaced by the manufacturer, its service agent or similar qualified persons in order to avoid a hazard.
9) Please abandon the refrigerator according to local regulations as the unit contains flammable explosive gas and refrigerant.
10) Follow local regulations regarding disposal of the appliance due to flammable refrigerant and explosive gas. All refrigeration products contain refrigerants, which under the guidelines of federal law must be removed before disposal. It is the consumer's responsibility to comply with federal and local regulations when disposing of this product.
11) This appliance is intended to be used in households and similar environments; such as:
    - staff kitchen areas in shops, offices and other working environments;
    - farm houses and by clients in hotels, motels and other residential-type environments;
    - bed and breakfast type environments;
    - catering and similar non-retail applications.
12) Do not store or use gasoline or any inflammable liquors and liquids inside or in the vicinity of refrigerator.
13) Do not use an extension cord with this appliance. If the power cord is too short, have a qualified electrician install an outlet near the appliance. Use of an extension can negatively affect the unit's performance.



Caution: risk of fire

⚠ IT IS HAZARDOUS FOR ANYONE OTHER THAN AUTHORIZED SERVICE PERSONNEL TO CARRY OUT SERVICES OR REPAIRS INVOLVING THE REMOVAL OF COVERS.

⚠ TO AVOID THE RISK OF AN ELECTRICAL SHOCK DO NOT ATTEMPT REPAIRS YOURSELF.

TABLE OF CONTENTS

NAMES OF THE PARTS..... 2

IMPORTANT SAFETY INSTRUCTIONS..... 3

INSTALLATION INSTRUCTIONS

BEFORE USING YOUR FREEZER..... 3

INSTALLING YOUR FREEZER ..... 3 - 4

ELECTRICAL CONNECTION..... 4

OPERATING YOUR FREEZER

TEMPERATURE CONTROL..... 5

DEFROSTING YOUR FREEZER..... 5 - 6

THE FREEZER COMPARTMENT..... 6

CARE AND MAINTENANCE

CLEANING YOUR FREEZER..... 7

VACATION TIME..... 7

MOVING YOUR FREEZER..... 7

ENERGY SAVING TIPS..... 7

TROUBLESHOOTING GUIDE..... 8 - 9

CHEST FREEZER WARRANTY..... 10

NAMES OF THE PARTS

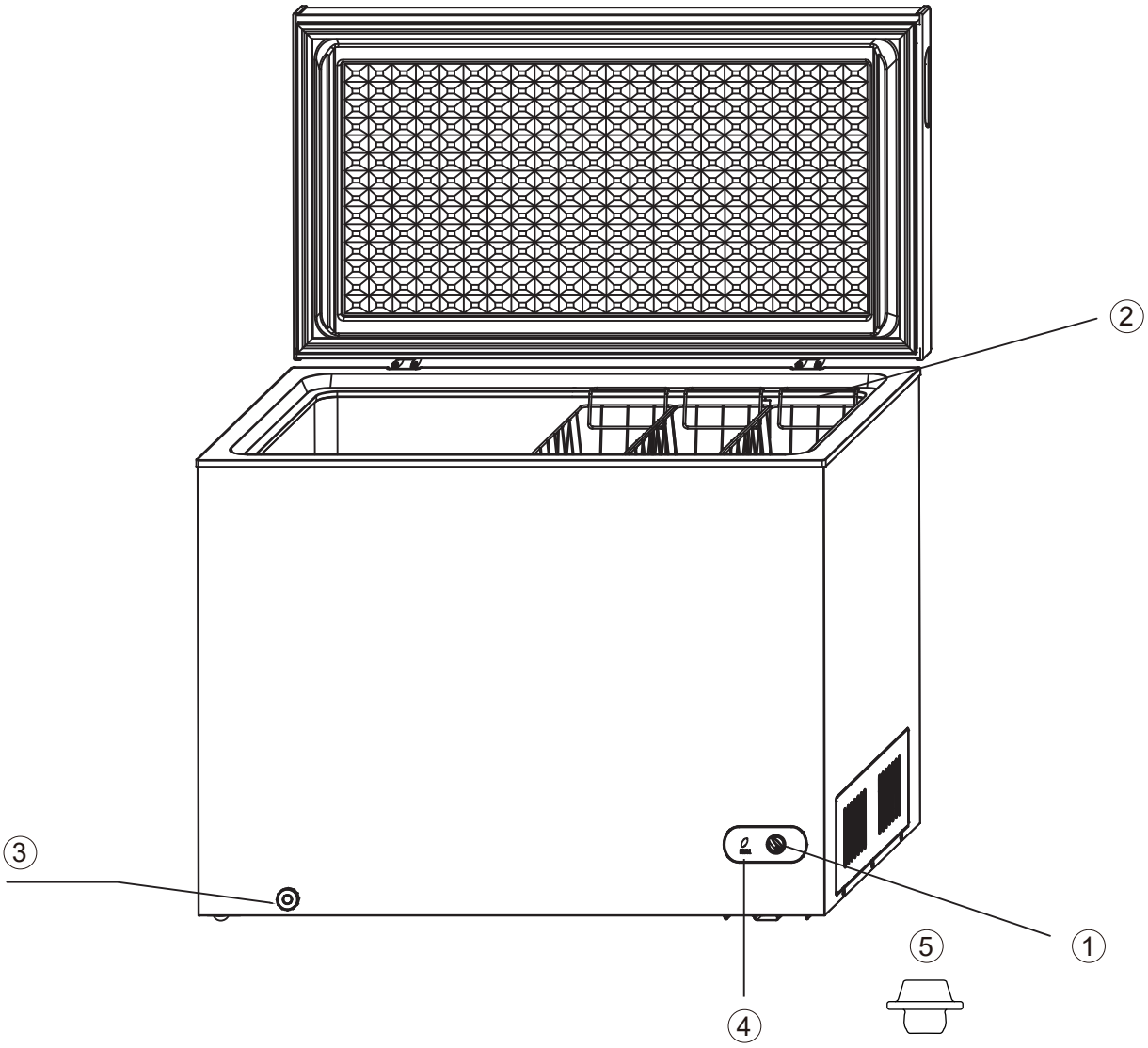

1. Temperature Control Adjustment
2. Removable Storage Basket
3. Exterior Drain Dial
4. Compressor on Indicator (green)
5. Drain plug

WARNING: Never touch the interior of the Freezer Chamber or frozen foods in the compartment with wet hands as this could result in frost bite.

IMPORTANT SAFETY INSTRUCTIONS

WARNING	To reduce the risk of fire, electrical shock, or injury when using your freezer, follow these basic precautions:

- Read all instructions before using the freezer.
- **DANGER or WARNING:** Risk of child entrapment.
  To avoid the possibility of child entrapment, please take the following precautions:
  Remove the freezer top and DO NOT remove the internal basket.
- **Before you throw away your old freezer:** Take off the top. Leave the basket in place so that children may not easily climb inside.
- Never allow children to operate, play with, or crawl inside the freezer.
- **Refrigerants:** All refrigeration products contain refrigerants, which under the guidelines of federal law must be removed before disposal of product. It is the consumer's responsibility to comply with federal and local regulations when disposing of this product.
- Never clean freezer parts with flammable fluids. The fumes can create a fire hazard or explosion.
- Do not store or use gasoline or any other flammable vapors and liquids in the vicinity of this or any other freezer. The fumes can create a fire hazard or an explosion.

-Save these instructions-

INSTALLATION INSTRUCTIONS

Before Using Your Freezer

- Remove the exterior and interior packing.
- Check to be sure you have all of the following parts:
  - 3 Storage Baskets
  - 1 Instruction Manual
  - 1 Ice Shovel

- Before connecting the freezer to the power source, let it stand upright for approximately 4 hours. This will reduce the possibility of a malfunction in the cooling system from improper handling during transportation.
- Clean the interior surface with lukewarm water using a soft cloth. (Cleaning instruction on page 7)

Installing Your Freezer

- This appliance is designed to be free standing only and should not be recessed or built-in.
- Place your freezer on a floor that is strong enough to support the freezer when it is fully loaded.
- Allow 5 inches of space between the back and sides of the freezer, which allows the proper air ventilation. Adjust the feet to keep the freezer level.
- Your freezer should be conveniently located in a dry, well ventilated room away from direct sunlight and sources of heat (stove, heater, radiator etc.) Direct sunlight may affect acrylic coating and heat sources may increase electrical consumption. Do not install the freezer where the temperature will go below 32 degrees F or above 110 degrees F. Temperatures outside of this range may affect the performance and longevity of the unit.
- Avoid locating the freezer in moist areas.

- Take the drain plug out from the plastic bag, and plug it into the freezer as shown below:

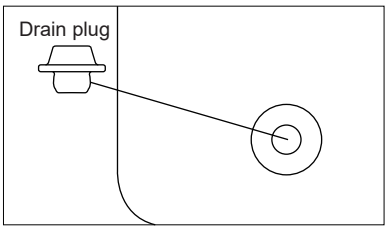

- Plug the freezer into a dedicated, properly installed-grounded wall outlet. Do not, under any circumstances, cut or remove the third (ground) prong from the power cord. Any questions concerning power and/or grounding should be directed toward a certified electrician or an authorized service center. **This unit is not designed to be installed in an RV or used with an inverter.**
- After plugging the appliance into a wall outlet, turn the unit on and allow the unit to cool for 2~3 hours before placing food in the freezer compartment.

Electrical Connection

WARNING

Improper use of the grounded plug can result in the risk of electrical shock. If the power cord is damaged, have it replaced by an authorized service center.

This freezer should be properly grounded for your safety. The power cord for this freezer is equipped with a three-prong plug which mates with standard three prong wall outlets to minimize the possibility of electrical shock.

Do not, under any circumstances, cut or remove the third ground prong from the power cord supplied.

This freezer requires a standard 115/120 Volt A.C. ~/60Hz electrical outlet with three-prong ground.

This freezer is not designed to be used with an inverter.

The cord should be secured behind the freezer and not left exposed or dangling to prevent accidental injury.

Never unplug the freezer by pulling the power cord. Always grip the plug firmly and pull straight out from the receptacle.

Do not use an extension cord with this appliance. If the power cord is too short, have a qualified electrician or service technician install an outlet near the appliance. Use of an extension cord can negatively affect the performance of the unit.

If any problems with the appliance persist, please contact us via customer service number:
213-4467172 or 661-4358826

Do not attempt to repair or replace any part of your refrigerator unless it is specifically recommended in this manual. All other servicing should be referred to a qualified technician, so as to minimize the risk of possible ignition due to incorrect parts or improper service.



DANGER – Risk Of Fire Or Explosion. Flammable Refrigerant Used. To Be Repaired Only By Trained Service Personnel. Do Not Puncture Refrigerant Tubing

CAUTION – Risk Of Fire Or Explosion. Flammable Refrigerant Used. Consult Repair Manual/Owner's Guide Before Attempting To Service This Product. All Safety Precautions Must be Followed

CAUTION – Risk Of Fire Or Explosion. Dispose Of Property In Accordance With Federal Or Local Regulations. Flammable Refrigerant Used

CAUTION – Risk Of Fire Or Explosion Due To Puncture Of Refrigerant Tubing; Follow Handling Instructions Carefully. Flammable Refrigerant Used

OPERATING YOUR FREEZER

Temperature Control

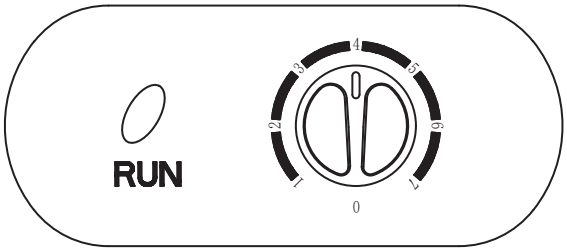

- Once your freezer is in its proper place, plug the power cord into an electrical socket to turn on the unit. The “Run” light (green) will be on if freezer compressor is in operation (if temperature control is set anywhere among 1-7).
- Your freezer will automatically maintain the temperature level you select. The temperature control dial has 7 temperature settings and a 0 setting (OFF). “1” is the cold and ”7” is the coldest.
- Turning the dial to 0 (OFF) stops cooling the freezer. The “Run” indicator (green) will turn off. Turning the temperature control to the “0” setting position stops the cooling cycle but doesn't shut off the power of the freezer.
- If turn the freezer on for the first time, set the dial to “4” and allow it at least 24 hours before adjusting the temperature to your needs. This will ensure the cabinet is thoroughly chilled before the food is put in.

- **NOTE:**
  - If the unit is unplugged or loses power, you must wait 3 to 5 minutes before restarting the unit. If you attempt to restart before this time delay, the freezer will not start successfully.
  - Large amounts of food will lower the cooling efficiency of the appliance.
  - If you choose to change the thermostat setting, adjust thermostat control by one numerical increment at a time. Allow several hours for temperature to stabilize between adjustments.

Defrosting Your Freezer

- When? For the most efficient operation and minimum energy consumption, defrost the freezer when the frost on the freezer walls is excessive or ¼ to ½ inch thick (approximately every 3 months).
- Choose a time when the stock of frozen food is less.

CAUTION

Do not use boiling water because it may damage the plastic parts. In addition, never use a sharp or metallic instrument to remove frost as it may damage the cooling coils.

- Remove the frozen food from the freezer and place it in a cooler to protect the food.
- Unplug the freezer. The “Run” light should be off (green light out).
- During defrosting, the ice melts into the cabinet.
- Unscrew and remove the drain cap on the exterior front of the freezer (lower left).
- Place a shallow pan outside drain outlet. The defrost water will drain out.
- Check the pan occasionally so the water does not overflow.

- Clean the interior of the freezer.
- Return the drain cap to position.
- Plug the unit in.
- Adjust the temperature control knob to “7”. The “Run” indicator (green) should light up.
- Allow the cabinet to cool for one hour.
- Return food to the freezer.
- Adjust the temperature control knob to set the freezer to preferred temperature.

HELPFUL HINT:

Defrosting usually takes a few hours. Leaving the door open will help speed up the process. Also, pouring warm water (not boiling) on the ice/frost will help speed up melting.

WARNING

Scraping ice from the freezer compartment can damage the unit.

The Freezer Compartment

- This compartment is designed for the long-term storage of frozen food. Storage time period is up to three months.
- The storage life of frozen foods varies and the recommended storage time should not be exceeded. The instructions regarding the care of frozen foods should be followed when defrosting the freezer.
- Pre-packed commercially frozen food should be stored in accordance with the frozen foods manufacturers’ instructions.
- Place frozen food into the freezer as quickly as possible after purchase. If there are instructions on the packet, carefully follow these instructions regarding storage times.
- The freezer lid is susceptible to breaking due to excessive ice build up. Be sure to defrost when the ice reaches ¼ to ½ inch thick.
- A storage basket is provided for the organization of odd-shaped items. To reach other packages in the freezer just slide the basket to one side or lift it out.

CARE AND MAINTENANCE

Cleaning Your Freezer

- Upon installation of your new appliance, it is recommended that it be cleaned thoroughly.
- Unplug the freezer; remove the food and storage basket.
- Wash the inside with a damp warm cloth soaked in lukewarm water and baking soda solution. The solution should be about 2 tablespoons of baking soda to a quart of water.
- Wash the storage basket with a mild detergent solution.
- Be sure to keep the door gasket (seal) clean to keep the unit running efficiently.
- The outside of the freezer should be cleaned with mild detergent and warm water.
- Dry the inner parts of the cabinet and exterior with a soft cloth.
- It is recommended that the unit be cleaned each time it is defrosted to help keep the unit odor free and running efficiently.

Vacation Time

- **Short vacations:** Leave the freezer operating during vacations of less than three weeks.
- **Long vacations:** If the appliance will not be used for several months, remove all food and unplug the power cord. Clean and dry the interior thoroughly. To prevent odor and mold growth, leave the door open slightly: blocking it open if necessary or have the door removed.

Moving Your Freezer

- Unplug the freezer.
- Remove all the food.
- Securely tape down all loose items inside your freezer.
- Tape the doors shut.
- Be sure the freezer stays in the upright position during transportation.

Energy Saving Tips

- The freezer should be located in the coolest area of the room, away from heat producing appliances or heating ducts, and out of the direct sunlight.
- Let hot foods cool down to room temperature before placing them in the freezer. Overloading the freezer forces the compressor to run longer. Foods that freeze too slowly may lose quality, or spoil.
- Be sure to wrap foods properly, and wipe containers dry before placing them in the freezer. This cuts down on frost build-up inside the freezer.
- Freezer storage bin should not be lined with aluminum foil, wax paper, or paper toweling. Liners interfere with cold air circulation, making the freezer less efficient.
- Organize and label food to reduce door openings and extended searches. Remove as many items as needed at one time, and close the door as soon as possible.

TROUBLESHOOTING GUIDE

You can solve many common freezer problems easily, saving you the cost of a possible service call. Try the suggestions below to see if you can solve the problem before calling for service.

PROBLEM	POSSIBLE CAUSE
Freezer does not operate.	Not plugged in. The circuit breaker tripped or a blown fuse.
Compressor turns on and off frequently.	The room temperature is hotter than normal. A large amount of food has been added to the freezer. The door is opened too often. The door is not closed completely. The temperature control is not set correctly. The door gasket does not seal properly. The freezer does not have the correct clearances. The freezer has recently been disconnected for a period of time. 4 hours are required for the freezer to cool down completely.
Temperature inside the freezer is too warm.	Temperature control is set too warm. Turn the control to a cooler setting and allow several hours for the temperature to stabilize. The door is kept open too long or is opened too frequently. Warm air enters the freezer every time the door is opened. Open the door less often. The door is not closed completely. The door gasket does not seal properly. A large amount of warm or hot food might have been stored recently. Wait until the freezer has had a chance to reach its selected temperature. The freezer has recently been disconnected for a period of time. 4 hours are required for the freezer to cool down completely.
Temperature inside the freezer is too cold.	Temperature control is set too cold. Turn the control to a warmer setting and allow several hours for the temperature to stabilize.
Temperature of external freezer surface is warm.	The exterior freezer walls can be as much as 30°F warmer than room temperature. This is normal while the compressor works to transfer heat from inside the freezer cabinet.
Popping or cracking sound when compressor comes on.	Metal parts undergo expansion and contraction, as in hot water pipes. This is normal. Sound will level off or disappear as freezer continues to run.
Bubbling or gurgling sound, like water boiling.	Refrigerant (used to cool freezer) is circulating throughout the system. This is normal.
Vibrations.	Check to assure that the freezer is on a level surface. Floor is uneven or weak. Freezer rocks on the floor when it is moved slightly. Be sure floor can adequately support freezer. Level the freezer by putting wood or metal shims under part of the freezer. The freezer is touching the wall. Re-level the freezer and move it from the wall.

	See “Installation Instructions”.
Moisture forms on inside freezer walls.	Weather is hot and humid, which increases internal rate of frost build-up. This is normal. Door is slightly open. Door is kept open too long, or is opened too frequently. Open the door less often. The door is not sealed properly.
Moisture forms on outside of freezer.	Door is slightly open, causing cold air from inside the freezer to meet warm moist air from outside.
The door will not close properly.	The freezer is not on a level surface. The gasket is dirty. The storage basket is out of position.

ROWAN ELECTRIC APPLIANCE LLC

8:30am-5:30pm P.S.T.
Monday to Friday

V1