Ca'Lefort

CLF-BVI15I-1.0-US
CLF-PRDVI15I-1.0-US

INSTRUCTION MANUAL

BEFORE USE, PLEASE READ AND FOLLOW ALL SAFETY RULES AND OPERATING INSTRUCTIONS.

Welcome to Ca'Lefort
Designed to Belong in the Home

At Ca'Lefort, we believe a home is not made by separate parts, but by the way everything comes together.

Why We Exist
We exist to bring ***design, fit, and trust*** back together. Every Ca'Lefort product is made to support the way people live, gather, store, prepare, and enjoy — without interrupting the space around it.

Who We Are
Ca'Lefort is a home-living appliance brand built around thoughtful design, quiet reliability, and everyday ease. We design for real homes, real routines, and the small details that make daily living feel more complete.

Our Story
The name Ca'Lefort reflects our belief in a home shaped with intention and supported by strength. "Ca'" evokes the idea of home, while "Lefort" suggests the quiet structure behind lasting comfort. Together, they represent our approach: ***refined design, dependable performance, and products made to belong.***

Stay connected with Ca'Lefort
Discover home inspiration, product care tips, and stories from real Ca'Lefort spaces.

facebook.com/calefort.official

twitter.com/calefortmarket

pinterest.com/calefort_official/

youtube.com/@calefortmarketing

instagram.com/calefort_official/

TABLE OF CONTENTS

IMPORTANT SAFETY INSTRUCTIONS 01

PARTS & TECHNICAL DATA 03

OPERATING YOUR APPLIANCE 04

INSTALLATION INSTRUCTIONS 06

Installation Notes
Before You Start
Recommended Installation Location
Grounding Instructions
CLF-BVI15I Handle Installation
CLF-PRDVI15I Custom Panel Installation

Built-In Under-Counter Installation
Before Using your Appliance
Installation Dimensions
Airflow System Overview

Reversing the Door Swing

Accessories Installation
PVC Water Inlet Hose Installation
Drain Hose Installation
Ventilation Plinth Installation

TROUBLESHOOTING GUIDE 19

LIMITED WARRANTY 20

IMPORTANT SAFETY INSTRUCTIONS

☆ WARNING

The information in this document is subject to change without prior notice.
Some models are available only in certain countries.

We provide no guarantee for this ice machine if it is used for any purpose other than its intended use. We cannot be held responsible for any errors in this manual. The warranty applies only to the ice machine and not to the contents inside the ice maker.

This appliance is not intended for use by persons (including children) with reduced physical, sensory, or mental capabilities, or lack of experience and knowledge, unless they have been given supervision or instruction concerning use of the appliance by a person responsible for their safety. Children must not play with the appliance.
Cleaning and user maintenance must not be performed by children without supervision.
Children should be supervised to ensure that they do not play with the appliance.

Do not place acidic substances, flammable materials, or explosive goods inside the ice maker.
This equipment is intended for the storage and display of non-hazardous materials.

This appliance is intended for household and similar applications such as:
• Staff kitchen areas in shops, offices, and other working environments;
• Farmhouses and use by clients in hotels, motels, and other residential-type environments;
• Bed and breakfast environments;
• Catering and similar non-retail applications.

☆ DANGER: Risk of child entrapment.

Before you dispose of your old ice maker:
• Remove the doors;
• Leave the shelves in place so that children cannot easily climb inside;
• Dispose of the appliance only at an authorized waste disposal center.

R600a WARNINGS

For your safety, follow all applicable recommendations when handling or using this appliance.
• This appliance contains a small quantity of R600a refrigerant, which is environmentally friendly but flammable.
It does not damage the ozone layer and has no contribution to the greenhouse effect.
• During transportation and installation, ensure that the refrigerant circuit tubing is not damaged.
• Do not use sharp objects near the appliance or on its surfaces, as this may damage the refrigerant system.
• Leaking refrigerant may ignite and may cause eye irritation or injury.

• In the event of any damage, avoid exposure to open flames or any devices that may generate sparks. Disconnect the appliance from the mains power immediately.

• Ensure the room is well ventilated for several minutes.

• Contact Customer Service for assistance and further instructions.

• The installation space must be at least 1 cubic meter per 8 grams of refrigerant. The refrigerant quantity is specified in grams on the rating plate of the appliance.

• WARNING: To prevent hazards caused by instability, the appliance must be installed and secured in accordance with the installation instructions.

• The warning symbol indicates that the refrigerant and insulation blowing gases are flammable. 

• WARNING: Risk of fire / flammable materials.

• WARNING: Do not store explosive substances, such as aerosol cans with flammable propellants, in this appliance.

• WARNING: When positioning the appliance, ensure the power cord is not pinched or damaged.

• WARNING: Do not place multiple portable socket-outlets or portable power supplies behind the appliance.

• WARNING: The refrigerant and insulation blowing gases are flammable. When disposing of the appliance, follow local regulations and use an authorized waste disposal facility. Do not expose the appliance to open flame during disposal.

It is hazardous for anyone other than an authorized service technician to perform servicing or repairs on this appliance.

• WARNING: Do not use electrical appliances inside the food storage compartments of the appliance unless they are of the type recommended by the manufacturer.

• WARNING: If the appliance will not be used for a long period, unplug the power cord from the socket or switch off the power supply.

• WARNING: Children must be supervised to ensure that they do not play with the appliance.

• WARNING: Do not use extension cords or ungrounded (two-prong) adapters.

• WARNING: If the power cord is damaged, it must be replaced by the manufacturer, its service agent, or a similarly qualified technician to avoid hazards.

☆ **Allow 24 hours before switching on the ice maker. During this time, it is recommended to leave the door open to eliminate any residual odors.**

PARTS & TECHNICAL DATA

PARTS & FEATURES

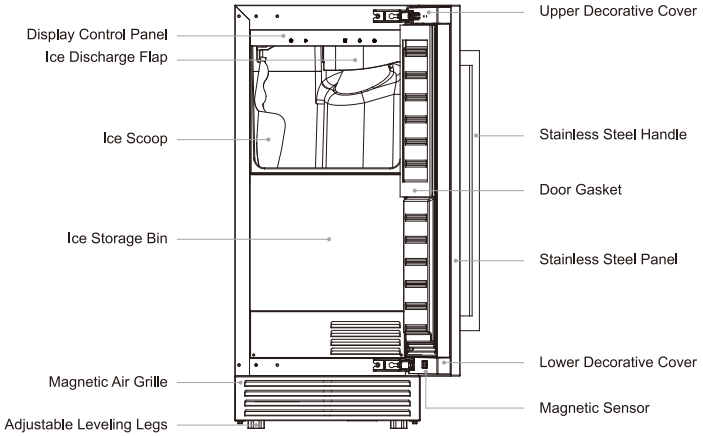

☆ **Note:** The parts and feature descriptions shown are based on the CLF-BVI15I model.
The CLF-PRDVI15I model does not include the stainless steel panel or stainless steel handle.

Technical Data	
Ice Type:	Nugget Ice
Installation Type:	Built-in or Freestanding
Daily Ice Production:	Up to 88 lb / 24 Hours
Ice Storage Capacity:	Up to 33 lb
Ice Bin Fill Time:	Approx. 7 – 8 Hours
Ice Bin Drain Capacity:	Approx. 5.5 lb
First Batch Time:	5 – 8 Minutes
Climate Class:	SN-T (Ambient temperature: 5 – 43°C / 41 – 109°F)
Water Connection:	Standard 1/4" Water Line
Drain System:	Gravity Drain with Built-in Drain Pump
Leveling Legs:	Adjustable up to 0.4"
Noise Level:	≤ 44 dBA
Estimated Energy Consumption:	4.5 kWh / 24 Hours
Electrical voltage limits:	120 / 60 Hz
Electrical voltage limits:	2.8 A
Rated Power:	170 W
Refrigerant / charge:	R600a, 35 g

☆ **Note:** When the machine is turned on, it will automatically enter cleaning mode. Please refer to the display operation instructions for details.

OPERATING YOUR APPLIANCE

Control Panel Operation

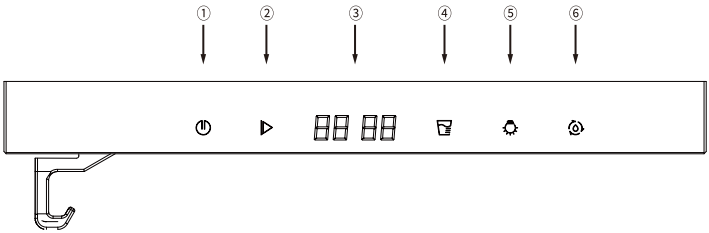

① Power Button

• Press and hold for 3 seconds to turn the unit ON/OFF.

② Ice Making Button

• Short press the " ▷ " button to start or stop ice making.

• When ice making is active, the display window (③) shows "ICE".

• When paused, the display window (③) shows "-- --".

③ Display Window:

• Displays function selection and operating status.

④ Ice Making Capacity Selection Button

• Press the " ⊟ " button to select ice production level: 50 / 75 / FULL.

⑤ Light Button

Press the " ☼ " button to cycle through lighting modes: L2 / L1 / L0.

L2 (Default Mode): LED turns ON when door is open and turns OFF when door is closed.

L1: LED remains ON continuously.

L0: LED remains OFF continuously (door open or closed).

⑥ Clean Button

The unit automatically enters cleaning mode upon power-on.

After approximately 30 minutes, it will automatically switch to ice making mode and display "ICE".

To exit cleaning mode manually, press and hold the " ⊙ " until "ICE" appears on the display.

Press and hold the “ ” button for three seconds to enter manual cleaning mode. This mode cannot be forcibly exited. The display will show “C--N”. The water reservoir will start filling automatically until it reaches the proper level, at which point the display will show “DI-C” (cleaning solution may be added at the user’s discretion; see diagram).

Press the “ ” button again to start the cleaning cycle. After approximately 13 minutes, the machine will automatically drain. The system will repeat the fill and drain cycle twice. After completion, the ice maker will automatically return to ice-making mode, and the display will show “ICE”. The total duration of the full manual cleaning process varies depending on local water pressure, typically around 40 minutes.

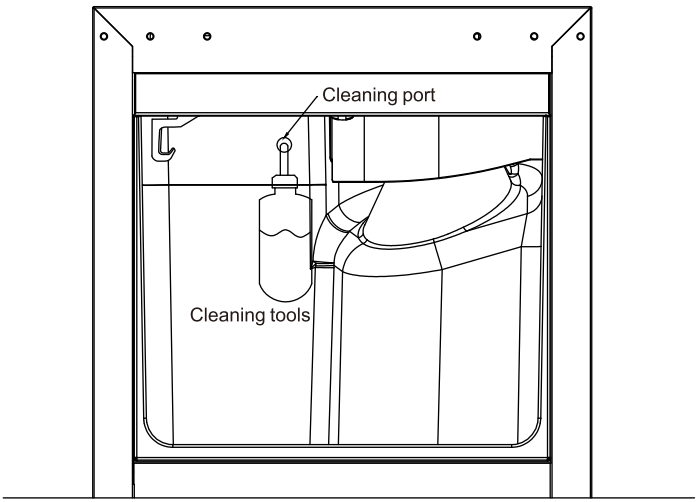

Cleaning tools must be purchased separately.

☆ Note:

Ensure the water reservoir is filled to the proper level before starting and do not attempt to interrupt the cleaning process manually. This cycle helps maintain optimal ice quality and hygienic operation. (Cleaning tools must be purchased separately.)

INSTALLATION INSTRUCTIONS

Installation Notes

Important: Models without a front ventilation grille are for freestanding installation only. This product supports both built-in and freestanding installation.

Before You Start

• Unpack and remove all protective materials and adhesive strips from the packaging, both inside and outside the ice maker.

• Ensure the power plug remains accessible after installation. Release the power cord and move the ice maker to its final position.

• Install the ice maker in a suitable location where the compressor will not be exposed to physical contact or impact.

Leveling Your Ice Machine

The ice maker must be leveled before operation.

The unit is equipped with 4 adjustable feet to facilitate easy leveling.

We recommend fully tightening the rear feet, then adjusting the front feet until the ice maker is level.

Check to Ensure You Have All Required Parts

CLF-BVI15I

• User manual ×1

• Ice scoop ×1

• Ice outlet baffle ×1

• Door handle ×1

• Screws ×6

• Water supply hose ×1 (2 m)

• Drain hose ×1 (1.5 m)

• Drain hose clamp ×1

• Magnetic ventilation grille ×1

• Upper and lower decorative door covers ×2

CLF-PRDVI15I

• User manual ×1

• Ice scoop ×1

• Ice outlet baffle ×1

• Screws ×8

• Water supply hose ×1 (2 m)

• Drain hose ×1 (1.5 m)

• Drain hose clamp ×1

• Magnetic ventilation grille ×1

• Upper and lower decorative door covers ×2

Recommended Installation Location

• Keep the installation area unencumbered and well ventilated.

• Keep the appliance away from heat sources and direct sunlight.

• Do not install in excessively humid environments (e.g., laundry rooms, pantries, bathrooms, etc.).

• Install on a flat and stable floor.

• Ensure a standard and reliable electrical supply is available (grounded outlet compliant with local standards). Do not use multi-socket adapters or extension cords.

• A surge protector is recommended for the electrical outlet.

Keep the appliance away from microwave ovens. Some microwave ovens may not have proper interference shielding. If placed within 1 meter, they may affect the operation of the ice maker.

The ice maker must be installed in an environment with an appropriate ambient temperature (refer to product specifications). Operating outside the recommended range may reduce performance.
Exposure to excessively hot or cold conditions may cause unstable operation and prevent the unit from reaching optimal performance.

Grounding Instructions

The ice maker must be properly grounded to reduce the risk of electrical shock in case of electrical leakage.
The appliance is equipped with a power cord containing a grounding wire and plug.
The plug must be inserted into a properly installed and grounded electrical outlet.
Note: In areas with frequent lightning, the use of a surge protector is strongly recommended.
Improper grounding may result in a risk of electric shock. If you are unsure about grounding requirements, consult a qualified electrician or service technician.
If the power cord is damaged, it must be replaced by the manufacturer, its service agent, or a similarly qualified professional to avoid electrical hazards.

CLF-BVI15I HANDLE INSTALLATION

(Skip this step for panel-ready models.)

Tools Required: Phillips screwdriver

Installation Steps:

1. Remove decorative parts [1] and [2] as shown in Figure 1.

Open the door first. The decorative covers are secured by two retaining clips. Firmly grasp each cover and pull it inward to remove it (Figure 2).

After removal, four pre-drilled oval mounting holes and two mounting screws will be visible. The upper and lower sections use the same mounting structure.

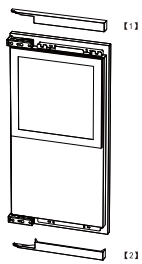

Figure 1

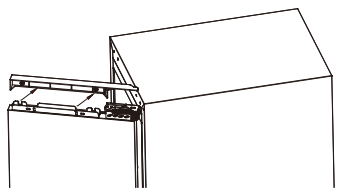
Figure 2

2. Remove the stainless steel panel.

Unscrew the retaining screws and remove the stainless steel panel from the door mounting plate.

3. Locate the pre-drilled mounting holes.

Pre-drilled handle mounting holes are provided on the door. The center-to-center spacing of the mounting holes is 540 mm (21.3 in) (Figure 3).

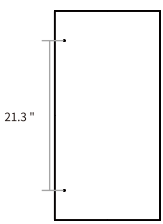

Figure 3

4. Install the handle.

Align the stainless steel handle with the mounting holes on the exterior side of the door. Ensure the handle is properly aligned before proceeding.

5. Install the screws.

Install the screws from the interior side of the door using the screws provided in the accessory kit.

6. Secure the handle.

Tighten the screws until the handle is firmly secured.

Do not overtighten. Excessive torque may damage the handle, door panel, or mounting structure.

Important Notes:

• Do not use power tools during installation. Power tools may damage the door panel or sheet metal structure.

• Before tightening the screws, ensure the handle is properly aligned with the mounting holes.

• Hand-tighten screws only. Excessive torque may cause damage or misalignment.

• Verify that the handle is secure and properly aligned before operating the appliance.

Figure 1 – Decorative cover removal

Figure 2 – Decorative cover detachment

Figure 3 – Handle mounting hole spacing: 540 mm (21.3 in.)

CLF-PRDVI15I CUSTOM PANEL INSTALLATION

This unit supports custom panel installation. The handle must be supplied by the user.

Recommended Panel Specifications

Panel Dimensions: 14.9" W × 0.7" D × 29.7" H

Panel Thickness: 0.7" – 0.8"

Panel Weight: Must not exceed the hinge load capacity (35 kg / 77 lb)

Installation Steps

1. Mark the mounting locations.

Place the custom panel on a flat, stable surface.

Using the dimensions shown in the diagram, measure and mark points A, B, and C on the rear side of the panel.

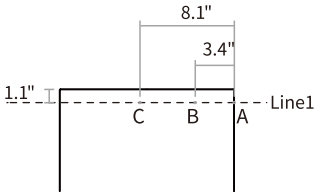

2. Install the user-supplied handle.

Install the handle according to the handle manufacturer's instructions.

Handle mounting screws must be inserted and secured from the rear side of the panel toward the front.

3. Attach the custom panel to the door.

Align the panel with the door assembly.

Match points B and C on the custom panel with points b and c on the door assembly, then secure the panel using the appropriate mounting screws.

Do not overtighten the screws.

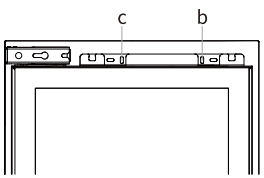

4. Complete the installation.

Adjust the panel until it is level and properly aligned.

Install the lower mounting screws to secure the panel and complete the installation.

Mounting Hole Dimensions

Custom Door Panel Dimensions (For Reference Only)

Refer to the dimensional drawings for mounting hole locations, spacing requirements, and panel dimensions.

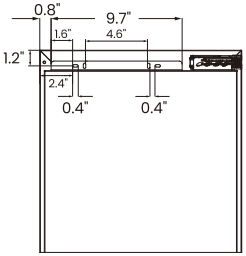

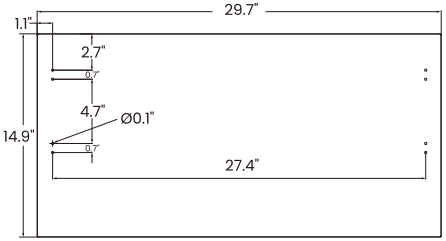

☆ **Important Note**

• The custom panel must not obstruct the ventilation grille located at the bottom of the unit.

• Adequate airflow must be maintained at all times to ensure proper ventilation and heat dissipation.

• Failure to maintain proper ventilation clearance may affect appliance performance and reliability.

BUILT-IN UNDER-COUNTER INSTALLATION

Before Using Your Appliance

1. Built-in ice maker feature front ventilation and are not designed to be fully enclosed behind a cabinet or joinery door.
2. Follow the installation diagram when installing the built-in ice maker. Minimum installation clearances must be maintained to ensure proper ventilation and performance.
3. The built-in ice maker draws air in through the right side of the ventilation grille and exhausts air through the left side beneath the front door.
4. The built-in ice maker is equipped with a power switch located on the control panel; therefore, the location of the electrical outlet is not critical, provided it remains accessible after installation.
5. The ice maker requires a dedicated 115 V / 15 A grounded electrical outlet (or equivalent specifications required by local electrical standards).
6. The power cord is approximately 2.0 m (6.6 ft) long and is located on the right-hand side at the rear of the unit when viewed from the front.
7. Like most modern appliances, the ice maker contains sensitive electronic components that may be affected by lightning strikes or power supply fluctuations. The use of a surge protector is strongly recommended.
8. When installing a custom wood panel or cabinet door, adequate ventilation openings must be provided. The ventilation grille must not be obstructed.

In hot climate regions, an air vent or grille with a minimum opening size of 200mm × 40mm (7.9" × 1.6") must be installed at the rear upper section of the cabinet partition or at the top of either side panel. This allows cool fresh air to circulate freely into the 30 mm (1.2") rear clearance space behind the cabinet.

The ventilation opening must not be positioned on the same side as heat-generating appliances, such as ovens, or in any enclosed area without access to fresh air.

Failure to comply with these installation requirements may result in reduced performance and may void the product warranty.

☆ **Note:** The appliance must be positioned so that the power plug remains accessible after installation.

Installation Dimensions

For built-in installation, the cabinet should provide adequate ventilation space and should not include a solid rear panel. Otherwise, the ice machine may not operate properly. (See installation diagrams below.)

It is recommended to maintain the following minimum clearances:

• Top clearance: 0.4"

• Rear clearance: 0.8"

• Left / Right - side clearance: 0.2"

Installation example: Model CLF BVI15I

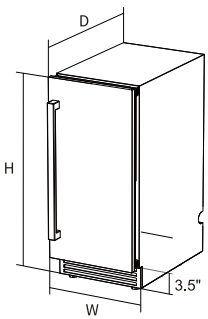

W: 14.8" D: 23.6" H: 33.9"

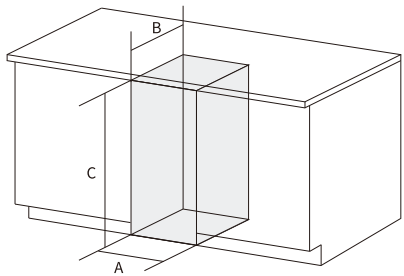

A: 15.2" B: 24.4" C: 34.3"

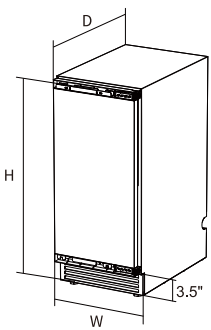

W: 14.8" D: 22.9" H: 33.9"

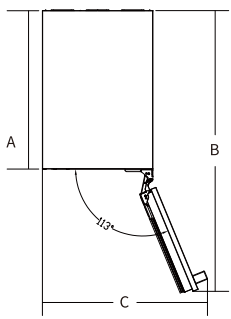

A: 21.4" B: 37.7" C: 22.2 "

Airflow System Overview

This unit features a side anti-condensation tube and an independent cooling system.

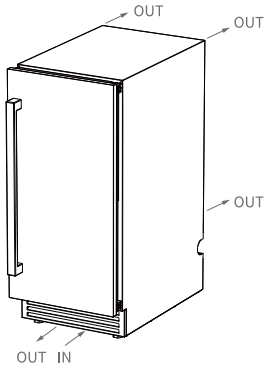

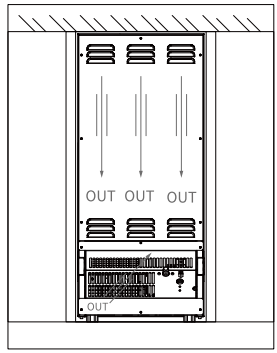

Reversing the Door Swing

☆ Warning

To reduce the risk of injury or property damage during door reversal, we recommend that this procedure be performed with the assistance of another person.

Depending on the model and handle configuration, the door may need to be rotated 180° during the reversal process.

Note: Before beginning, disconnect the appliance from the power supply. Door reversal should be performed by two people.

☆ Installation

1. Place the appliance in an open area with sufficient working space, and fully open the door.

2. Using a small flat-head screwdriver, carefully remove the decorative caps (①) from the left side of the cabinet (Figure 1).

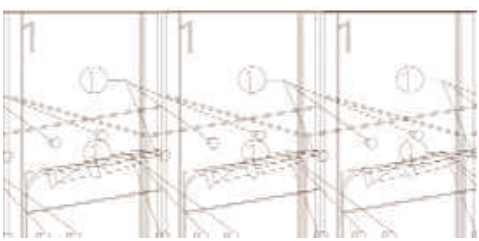

3. Using a Phillips screwdriver, remove the M5 countersunk screws (②) securing the upper and lower door Carefully lift and remove the door (Figure 2).

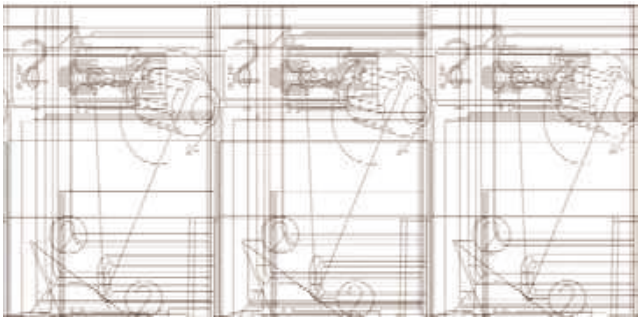

4. Follow the steps below to reverse the door swing.

Step 1：

Remove the door gasket and reinstall it on the opposite side of the door.

Step 2：

Remove the decorative cover. Then use a screwdriver to remove the magnetic sensor from the lower decorative cover and install it onto the upper decorative cover.

For detailed instructions on removing the decorative cover, refer to the **Handle Installation** section.

Step 3：

Rotate the entire door and hinge assembly 180° as shown in Figure 3.

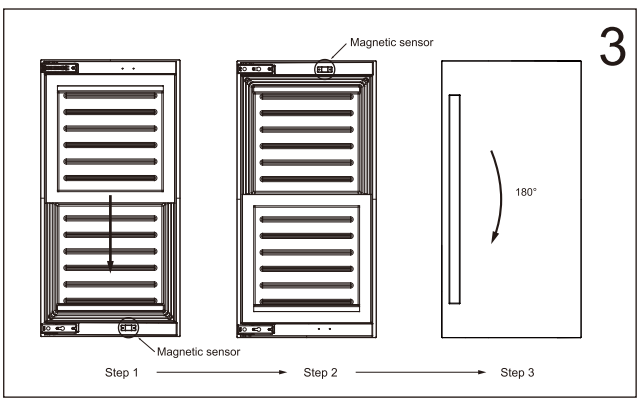

5. Using a Phillips screwdriver, secure the upper and lower door hinges on the opposite side of the cabinet with the M5 countersunk screws (②) removed earlier (Figure 4).

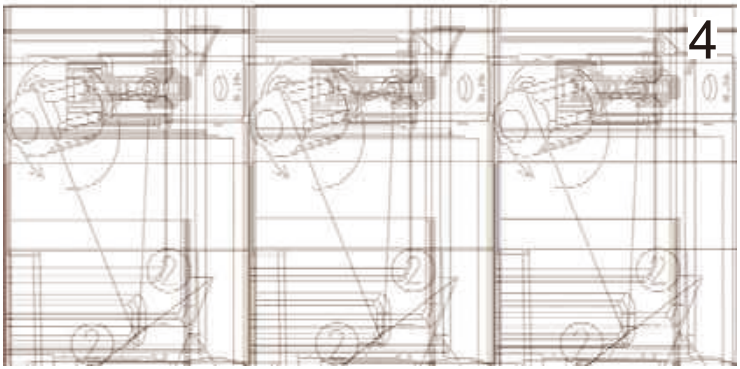

6. Reinstall the decorative caps (①) into the unused mounting holes on the opposite side of the cabinet to complete the door swing reversal (Figure 5).

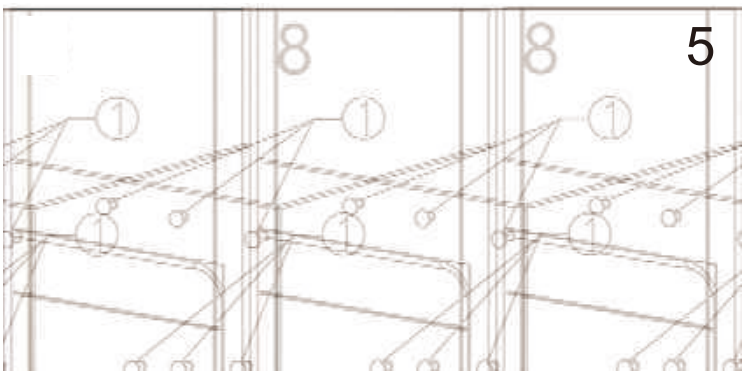

Accessories Installation

PVC Water Inlet Hose Installation

Insert one end of the PVC water inlet hose into the ice maker water inlet connection. Pull gently by hand to ensure the hose is fully seated and securely connected.Connect the other end to a water purifier or potable water supply line, as shown in Figure①.

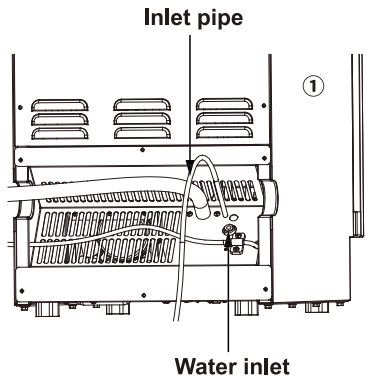

Drain Hose Installation

1. Connect the drain hose to the drain outlet and push it firmly into place, as shown in Figure ① .
2. Route the other end of the drain hose to a suitable floor drain or drainage system. Ensure the hose is positioned to allow unobstructed water flow, as shown in Figure②.

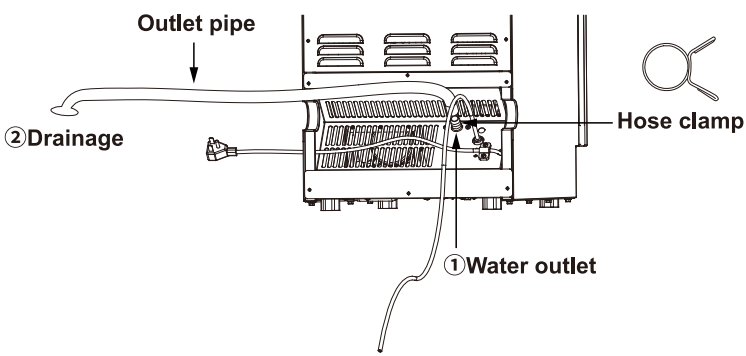

Ventilation Plinth Installation

Open the door and align the ventilation plinth with the mounting position at the bottom of the mounting position at the bottom of the cabinet. Push the plinth into place until it is securely attached.

Note: Magnets located at the bottom of the cabinet hold the ventilation plinth in position.

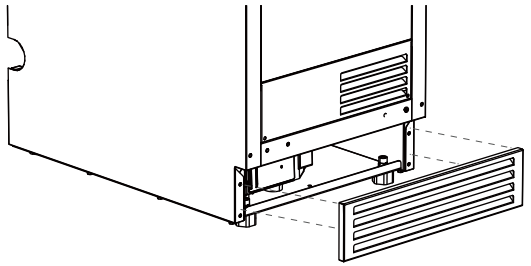

TROUBLESHOOTING GUIDE

To help reduce maintenance costs, please refer to the troubleshooting guidance below for common issues. Read the relevant sections of the user manual carefully before taking any action.

Error Code	Description
0000	Door Open Alarm. The door has remained open for more than 3.5 minutes. The buzzer sounds, the LED indicator flashes, and the display shows "00 00". The alarm automatically clears after 3.5 minutes or when the door is closed. Cooling operation continues normally.
CL	Cleaning Reminder. Indicates that the interior water reservoir and ice bucket should be cleaned.
E1	Ice Sensor A Fault. The internal ice sensor is malfunctioning.
E2	Evaporator Temperature Sensor B Fault. The sensor is malfunctioning or disconnected.
E3	Condenser Temperature Sensor C Fault. The sensor is malfunctioning or disconnected.
E4	Water Supply Fault. Water is not entering the appliance properly, or the water inlet valve may be malfunctioning.
E5	Drain Pump Fault. The drain pump is malfunctioning.
LL	Ice-Making Motor Fault.
HH	Refrigeration System Fault.

Before Disposing of the Appliance

1. Unplug the appliance from the electrical outlet.

2. Cut off the power cord and dispose of it safely.

	Proper Disposal of This Appliance
	This appliance contains recyclable materials and should be disposed of in accordance with local, state, and federal regulations. Do not dispose of this appliance with regular household waste. Please contact your local waste management authority or recycling center for environmentally responsible disposal options. If the appliance contains refrigerant, disposal must be carried out by qualified personnel in compliance with applicable regulations.

LIMITED WARRANTY

1-YEAR LIMITED WARRANTY

For one (1) year from the original order date, Ca' Lefort will provide replacement parts for any component found to be defective in materials or workmanship under normal residential use.

This warranty applies only when the appliance has been installed, operated, and maintained in accordance with the instructions provided in this manual.

Technical support, installation guidance, and troubleshooting assistance are available through our Customer Support team.

3-YEAR LIMITED WARRANTY ON WEAR PARTS

For three (3) years from the original order date, Ca' Lefort will provide replacement wear parts that fail due to defects in materials or workmanship under normal residential use.

For purposes of this warranty, wear parts include:
• Decorative Cover
• Ice Discharge Flap
• Ice Scoop
• Door Gasket
• Magnetic Air Grille
• Other designated wear components specified by Ca' Lefort

This warranty does not cover normal cosmetic wear, discoloration, accidental damage, misuse, abuse, improper installation, or failure resulting from improper maintenance.

5-YEAR LIMITED WARRANTY ON COMPRESSOR

For five (5) years from the original order date, Ca' Lefort will provide a replacement compressor if the original compressor fails due to defects in materials or workmanship under normal residential use.

Beginning in the second year of ownership, labor charges, transportation costs, shipping expenses, and service-related fees associated with compressor replacement are the responsibility of the owner unless otherwise prohibited by applicable law.

WHAT IS NOT COVERED

This warranty does not cover:
• Damage resulting from accident, misuse, abuse, neglect, improper installation, improper maintenance, or unauthorized modification.
• Damage caused by fire, flood, lightning, earthquakes, storms, or other events beyond Ca' Lefort's reasonable control.
• Damage resulting from improper electrical supply, voltage fluctuations, power surges, or improper grounding.
• Cosmetic damage, including scratches, dents, discoloration, or normal wear and tear that does not affect product performance.
• Service calls intended to correct installation issues, provide product instruction, reverse door swing configuration, or address non-defect-related concerns.

• Repairs performed by unauthorized service providers.
• Damage caused by use of the appliance for purposes other than its intended residential application.
• Consumable items requiring routine replacement, except where specifically covered under the applicable warranty period.
• Shipping, handling, transportation, or travel expenses associated with warranty service, unless otherwise required by law.

LIMITATION OF LIABILITY

To the maximum extent permitted by law, Ca' Lefort shall not be liable for incidental, indirect, special, or consequential damages arising from the use of this appliance, including but not limited to loss of contents, loss of use, inconvenience, property damage, or economic loss.
Some states do not allow limitations on incidental or consequential damages, so the above limitation may not apply to you.

WARRANTY SERVICE

To obtain warranty service, please contact Ca' Lefort Customer Support and provide:
• Proof of purchase
• Model number
• Serial number
• A clear and detailed description of the issue, including when the problem began, any error messages or abnormal conditions observed, and any troubleshooting steps already performed. To help expedite warranty evaluation, please provide photos, videos, or other supporting documentation when available.
Warranty coverage begins on the original order date and applies only to products purchased through authorized Ca' Lefort sales channels.

ICE AND STORAGE CONTENTS DISCLAIMER

This appliance is a 15-inch built-in ice maker designed for ice production and temporary ice storage.
Ca' Lefort is not responsible for ice melting, clumping, odor, contamination, deterioration, failure to produce ice, or reduced ice quality resulting from power outages, temperature fluctuations, water quality issues, abnormal water pressure, improper drainage, improper installation, misuse, lack of maintenance, improper cleaning, acts of nature, or other conditions beyond the manufacturer's reasonable control.
The owner assumes responsibility for monitoring the operating condition of the appliance, ensuring that water supply, drainage, ventilation, and installation conditions comply with the instructions provided in this manual, and performing regular cleaning, maintenance, and care to maintain proper operating conditions.

CONTACT US

If you have questions about your appliance, installation, operation, maintenance, warranty service, or replacement parts, our Customer Support team is here to assist you.

For faster service, please include your model number, serial number, proof of purchase, and a detailed description of the issue when contacting us.

Customer Support Email
service@calefort.com

Website
www.calefort.com

Address	
Phone	
Fax	
Email	
Online	

Activate Warranty & Join Us

VISIT: https://calefort.vip/
or scan the QR code

Email: **service@calefort.com**

*Activate Product Warranty

*VIP Exclusive Service

*Personalized product care & records

Just let us know if you have any questions about our products!