SEACHROME

Seachrome Corporation
1906 East Dominguez Street
Long Beach, California 90810
Phone: (800) 955-2476
Fax: (800) 444-3380

Description:

SSBB-480240-PTS

48" x 24" Stationary Bench Seat
with Removable Backrest
(Solid Teak Phenolic Seat & Backrest)

Customer:

Customer Part #

09-30-2016

This drawing and the information contained herein is proprietary to Seachrome Corp. and shall not be reproduced, copied or disclosed in whole, or part, or used for manufacturing or for any other purpose without the written permission of Seachrome Corporation.

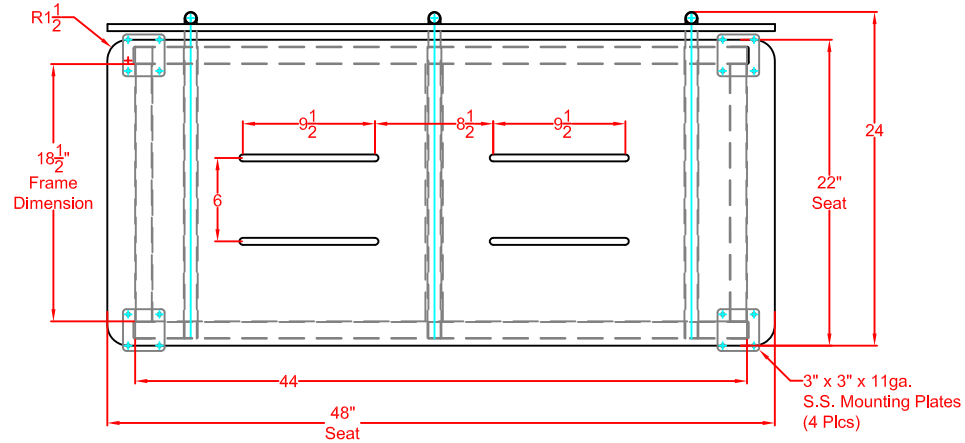

Materials:

Main Seat Frame, One Piece Heliarc Welded:
1-1/4" Square, 18 gage (0.049) Stainless Steel.

Back Rest:

1" Round, 18 gage (0.049) Stainless Steel.

Seat and Back Rest:

Choice of:
2" White Padded Naugahyde or
1/2" White or Teak Phenolic

Weight Capacity:
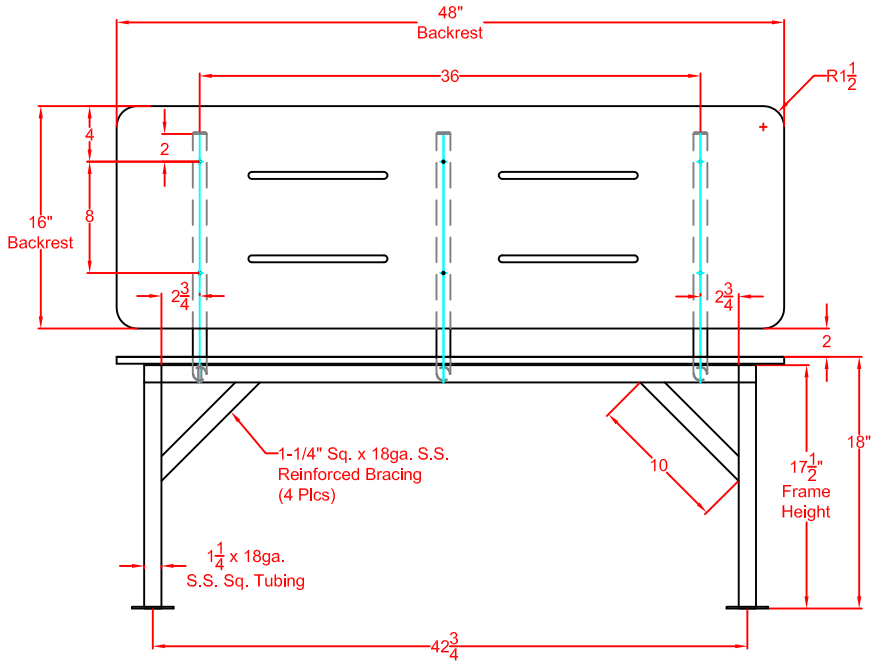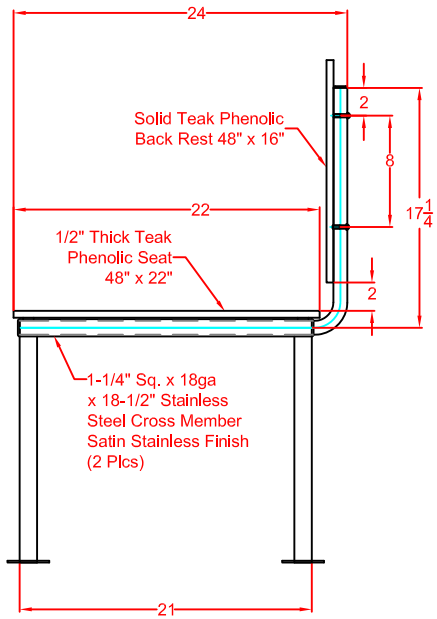
500 Lbs.