USER MANUAL

Package contents

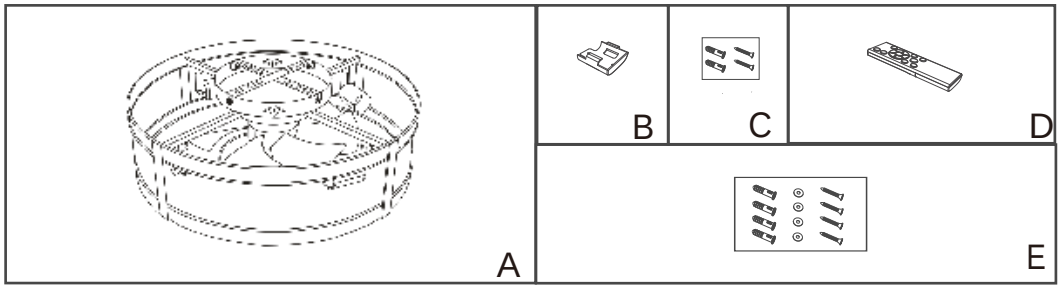

A. Ceiling fan light x 1
B. Remote control wall bracket x 1
C. Accessory pack for bracket x 1
D. Remote control x 1
E. Accessory pack x 1

Attention

1. To avoid potential slectric shock, the home main power supply must be shut off before installation.
2. Please pay attention to check whether the wires were in good condition before installation.
3. All wiring must be carried out under national and specifications,please hire or consult a licensed electrician to ensure that the live, neutral, and ground wires are connected correctly.
4. Please don't refit this ceiling fan light fixture,which may damage it.
5. All screws must be checked and re-tightended if necessary before operating the ceiling fan light fixture.

Installation Steps

Step1. Loosen the screws which connected the hanging plate and light fixture, but don't take them off, then take the hanging plate from the ceiling fan light fixture.

Step2. Install bulbs.

Step3. Marking/locating the hole position on the ceiling by borrowing the hole positon of the hanging plate.

Step4. If you have a wooden ciling, use type 1 screws; if you have a concrete ceiling, use type 2 screws, then according to the size of the screws type, punch suitabel size holes at the hole marks, then install the hanging plate.

Step5. Connect wires:Connect the black live wire marked "L" on the receiver to the live wire (typically black) on the socket box.Connect the white neutral wire marked "N" on the receiver to the neutral wire (typically white) on the socket box. Connect the ground wire (bare wire) from the base of the ceiling fan base with the ground wire (bare wire) of the socket box.(**Hang the lamp on the hanging plate with S-hook then connect wires. Take off the S-hook after connect wires and proceed to the next step.**)

Step6. Assemble the ceiling fan light fixture to the hanging plate, tighten the screws. Adjust the swivel screw on the lamp holder to keep the bulb in place and complete the installation.

USER MANUAL

Tips: Before installation, the lamp should be tested for electricity. The lampcan be installed to the ceiling only in normal operation.

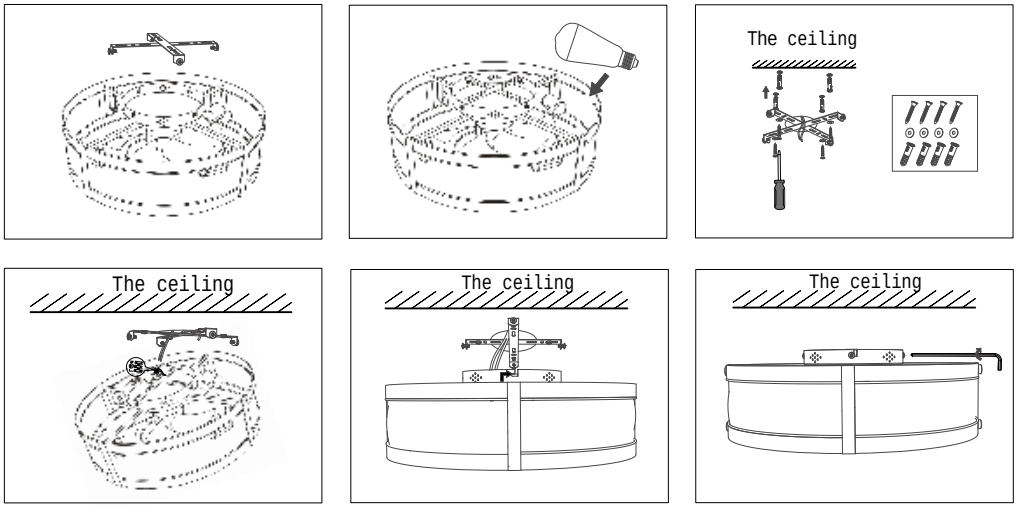

Remote control

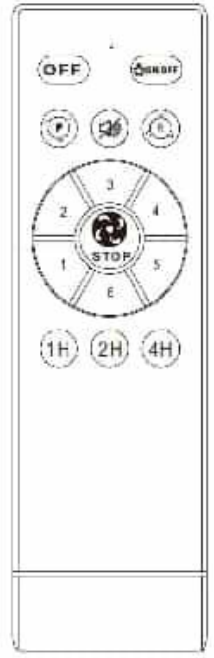

OFF Total Key
Stop Fan off
Fan rotates reverse
Lignt on/off
Fan speeds
Fan rotates forward
Natural flow
Timing for 4 hour
Timing for 1 hour
Timing for 2 hour & **pair key**
Battery type: AAA(not include)

Warm Tips:

If your remote control does not control the fan and lights, please follow the steps below to undo the fault.

Step 1: Replace the battery of the the remote control.

Step 2: 433 Code pairing: Turn on the power switch, hear a beep, and press and hold the "2nd gear and 2 hours" button for 3 secondsThe re ceiveremits a beep, indicating successful code pairing. If the code is n ot successfully matched, please turn off the powerand wait for 1 minut e to repeat the above operation..5