Shark CarpetXpert

HairPro® Pet

with StainStriker™

EX300 Series

OWNER'S GUIDE



IMPORTANT SAFETY INSTRUCTIONS

FOR HOUSEHOLD USE ONLY READ ALL INSTRUCTIONS BEFORE USING THIS CARPET CLEANER

⚠ WARNING

To reduce the risk of fire, electric shock, injury, or property damage:

1. If the power cord plug does not fit fully into the outlet, contact a qualified electrician. **DO NOT** force into outlet or try to modify to fit.
2. To reduce the risk of shock and unintended operation, unplug before servicing.
3. This carpet cleaner consists of a motorized nozzle, main body, pole, handle, hose, and hand tools. These components contain electrical connections, electrical wiring, and moving parts that potentially present risk to the user.
4. Before each use, carefully inspect all parts for any damage. If a part is damaged, discontinue use.
5. Use only identical Shark replacement parts.
6. **DO NOT** use the carpet cleaner for any purpose other than those described in this Guide.
7. **DO NOT** immerse or spray water on the body of the carpet cleaner.
8. To clean the surface, wipe with a dry cloth.
9. Keep the carpet cleaner's cord out of reach of children.
10. **DO NOT** allow the appliance to be used by children. **DO NOT** allow to be used as a toy. Close supervision is necessary when used near children.
11. This appliance can be used by persons with reduced physical, sensory, or mental capabilities or lack of experience or knowledge if they have been given supervision or instruction concerning use of the appliance in a safe way and understand the hazards involved. Cleaning and user maintenance shall not be done by children.
12. **DO NOT** handle plug or carpet cleaner with wet hands.
13. **DO NOT** use without the dirty water tank, clean solution tank, filter, brushroll, diverter valve, and brushroll cover in place.
14. Use only identical replacement parts. Only use Shark® branded filters and accessories.
15. **DO NOT** put any objects into nozzle opening. **DO NOT** use with any opening blocked; keep free of dust, lint, hair, and anything that may reduce airflow.
16. **DO NOT** use if nozzle airflow is restricted. If the air paths or the motorized floor nozzle become blocked, turn the carpet cleaner off. Remove all obstructions before you turn on the unit again. Keep nozzle and all carpet cleaner openings away from hair, face, fingers, uncovered feet, or loose clothing.
17. **DO NOT** use if carpet cleaner is not working as it should, or has been dropped, damaged, left outdoors, or dropped into water.
18. Use extra care when cleaning on stairs.
19. **DO NOT** leave the carpet cleaner unattended while plugged in.
20. When using on any surface, always keep the carpet cleaner moving to avoid damaging the surface (e.g., carpet fibers).
21. **DO NOT** place carpet cleaner on unstable surfaces such as chairs or tables. The surrounding area may be slippery and present a risk of injury.
22. **DO NOT** use to pick up:
    - **a)** Large objects.
    - **b)** Hard or sharp objects (glass, nails, screws, or coins).
    - **c)** Large quantities of dust (e.g., drywall dust).
    - **d)** Smoking or burning objects (hot coals, cigarette butts, or matches).
    - **e)** Flammable or combustible materials (lighter fluid, gasoline, or kerosene).
    - **f)** Toxic materials (chlorine bleach, ammonia, or drain cleaner).
23. **DO NOT** use in the following areas:
    - **a)** Poorly lit areas.
    - **b)** Outdoor areas.
    - **c)** Spaces that are enclosed and may contain explosive or toxic fumes or vapors (lighter fluid, gasoline, kerosene, paint, paint thinners, mothproofing substances, or flammable dust).
24. Turn off the carpet cleaner before any adjustment, cleaning, maintenance, or troubleshooting.
25. During cleaning or routine maintenance, **DO NOT** cut anything other than hair, fibers, or string wrapped around the brushroll.
26. **DO NOT** modify or attempt to repair the carpet cleaner yourself. **DO NOT** use the carpet cleaner if it has been modified or damaged.
27. Turn off all controls before unplugging.
28. To reduce the risk of fire or electric shock due to internal component damage, use only Shark® cleaning fluid. See the Cleaning Fluid section of this Instruction Book.
29. **DO NOT** pull or carry by cord, use cord as a handle, close a door on cord, or pull cord around sharp edges or corners. **DO NOT** run appliance over cord. Keep cord away from heated surfaces.
30. **DO NOT** unplug by pulling on cord. To unplug, grasp the plug, not the cord.
31. Use indoors only.
32. **DO NOT** use carpet cleaner on hard floors as it may damage your floor. To avoid damage to flooring and to avoid potential slip hazard, after use:
    - **a)** move to a hard sealed surface (avoid unsealed, wood and laminate) and
    - **b)** place unit on absorbent material like a towel to soak up any liquid.
33. **DO NOT** fill solution tanks while installed on the appliance. Remove before filling.
34. The areas around where you are cleaning may become wet, use care to avoid slipping and falling.
35. Use care when removing and reattaching the hand tool to avoid accidental activation of the cleaning solution. **DO NOT** spray solution on your skin or in your eyes.
36. **GROUNDING INSTRUCTIONS:** This appliance must be grounded. If it should malfunction or break down, grounding provides a path of least resistance for electric current to reduce the risk of electric shock. This appliance's cord has an equipment-grounding conductor and a grounding plug. The plug must be inserted into an appropriate outlet that is properly installed and grounded in accordance with all local codes and ordinances.
37. **WARNING**: Improper connection of the equipment grounding conductor can result in a risk of electric shock. Check with a qualified electrician or service person if you are in doubt as to whether the outlet is properly grounded. **DO NOT** modify the plug provided with the appliance. If the plug will not fit the outlet, have a proper outlet installed by a qualified electrician.

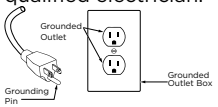

38. This appliance is for use on a nominal V circuit and has a grounding attachment plug that looks like the plug illustrated above. Make sure that the appliance is connected to an outlet having the same configuration as the plug. No adaptor should be used with this appliance.
39. **DO NOT** immerse. To reduce risk of electric shock, use only on carpet moistened by cleaning.
40. **DO NOT** use vinegar in any tanks.
41. **DO NOT** run over edges of area rugs.
42. Stalling the brush roll may result in premature failure.
43. Avoid repeated strokes over the same area to help prevent damage to Berber carpets.
44. Check manufacturer's tag prior to cleaning area rugs for any specific cleaning guidelines. We **DO NOT** recommend deep cleaning delicate rugs (including wool, cotton, silk, antique, or area rugs that **DO NOT** have a manufacturer's tag).
45. **DO NOT** store unit where temperatures reach freezing levels to avoid damaging internal parts.
46. **FIRST AID** Keep out of reach of children. Causes skin and serious eye irritation. **IF IN EYES**, rinse continuously with water for minutes. Remove contact lenses if present and easy to do so. Continue rinsing. **IF ON SKIN**, wash with soap and water. If skin and eye irritation persists, seek medical attention.
47. Please recycle container. Dispose of contents/container with a licensed waste disposal site in accordance with the requirements of the local waste disposal authority.
48. **DO NOT** dispose in drains or watercourses in concentrate form.

SAVE THESE INSTRUCTIONS

sharkclean.com

WHAT'S INCLUDED

Shark® CarpetXpert, 12 oz. Shark Deep Clean Pet Solution, 16 oz. Shark OXY Multiplier, 3.5" Stain Eliminator, 3.5" Reversible Bristles, Pet Hair Extractor

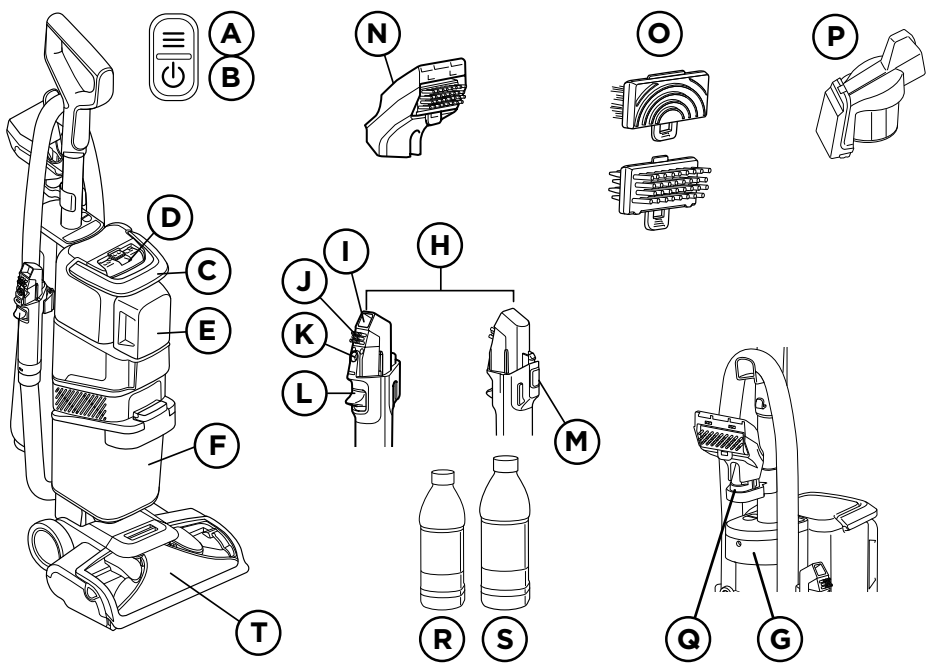

The 7" XL Stain Eliminator tool, Pet Mess Extractor Tool, and Tray are included with select models, and available for purchase at sharkclean.com.

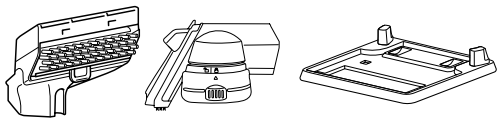

- **A** Mode Button
- **B** Power Button
- **C** CarpetXpert™ Tank
- **D** Rinse & Go Self-Wash Cycle
- **E** StainStriker™ Tank
- **F** Dirty Water Tank
- **G** Carry Handle
- **H** Mini Stain Eliminator
- **I** Suction Inlet
- **J** Removable Bristles
- **K** Spray Outlet
- **L** Hand Tool Trigger
- **M** Hand Tool Release Button
- **N** 3.5" Stain Eliminator
- **O** 3.5" Reversible Bristles
- **P** Pet Hair Extractor
- **Q** Hand Tool Mount
- **R** 12 oz. Deep Clean Pet
- **S** 16 oz. OXY StainStriker
- **T** Floor Nozzle

ASSEMBLY

Note: When assembling your CarpetXpert, there may be a little water in or around the water tanks. This is because we test all units before shipping to ensure the highest quality.

1. Insert the pole into the top of the unit until it clicks into place **(fig. 1)**. Make sure the pole is properly installed to prevent it from falling out during use.
2. Attach the 3.5" Stain Eliminator hand tool onto the Mini Stain Eliminator on the unit, or store it on the tool-holder that snaps onto the wand. Some models may also come with an accessory storage tray **(fig. 2, 3)**.
3. Be sure the rubber seal is seated in place under the dirty water tank.
4. Make sure that the Dirty Water Tank is fully inserted. Remove the tank and reinstall by placing the bottom of the tank on the bottom edge of the main unit **(fig. 4)** and tilting the tank back until it clicks into place.

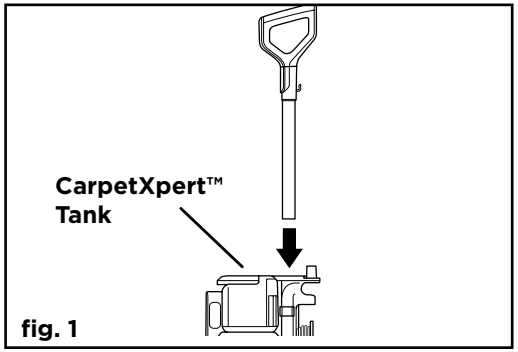

fig. 1

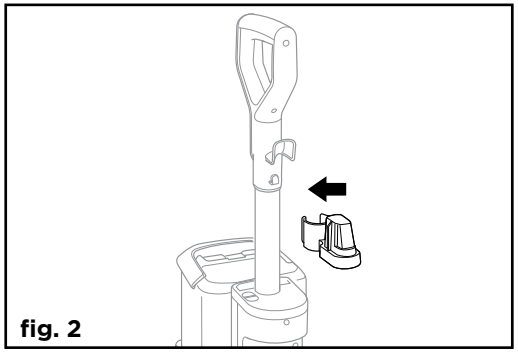

fig. 2

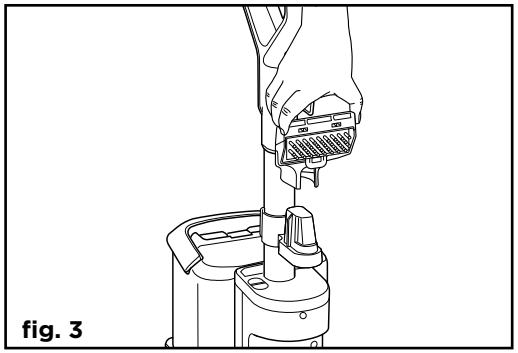

fig. 3

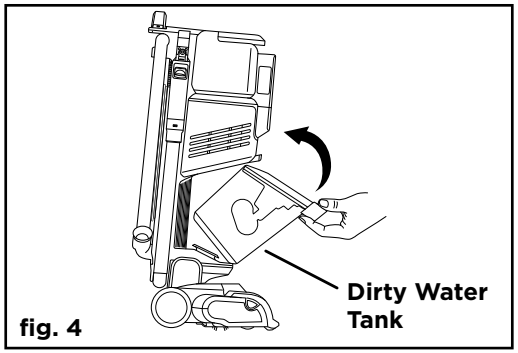

fig. 4

HOSE ASSEMBLY

TIP: Wrap hose tightly, leaving no slack

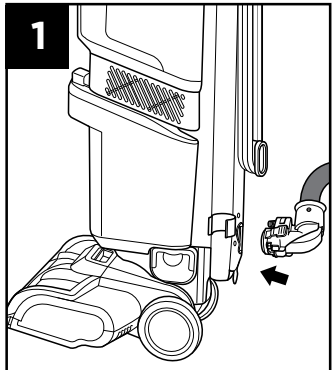

1 Insert hose **tightly** into back of unit until it **clicks twice** to avoid leaks.

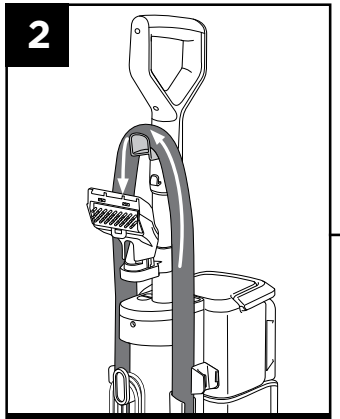

2 Loop hose **tightly** over the top tab.

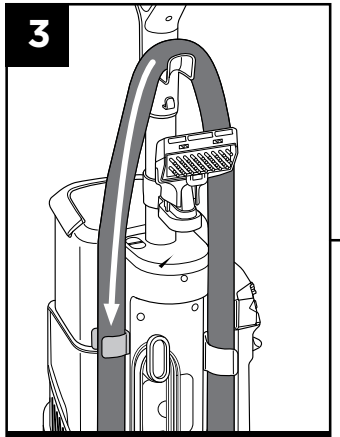

3 Press hose into second clip.

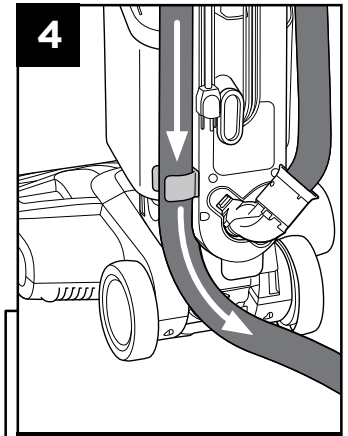

4 Press hose into third clip.

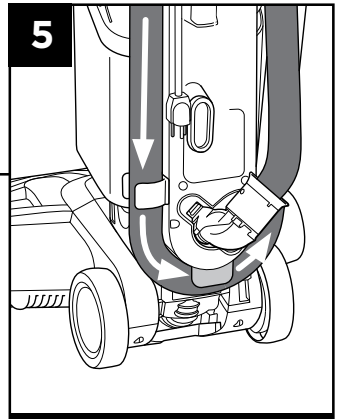

5 Loop hose **tightly** under the bottom tab

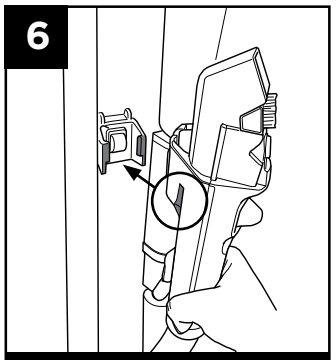

6 Align the grooves in the hand tool with the grooves in the holder, then slide the tool down to attach.

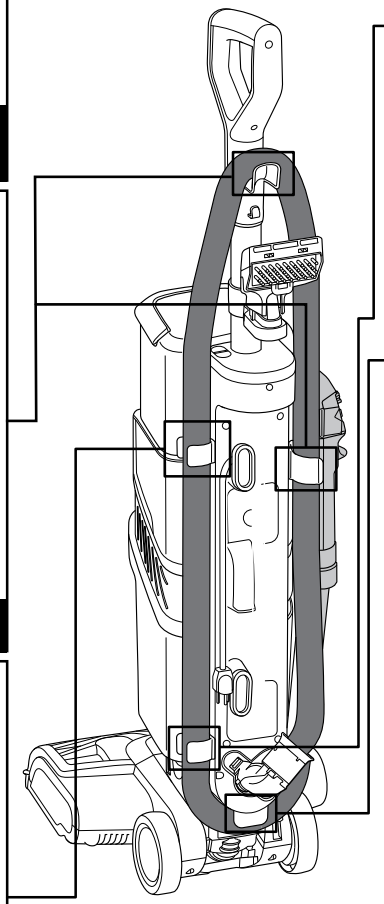

SHARK® CLEANING SOLUTIONS AND TANKS

Shark Cleaning Solutions
The cleaning solution tanks are designed to work with Shark cleaning solutions ONLY. To order refills, scan the QR code located on the bottom of the CarpetXpert Tank or at the bottom of this page. **Do not** use third party or homemade cleaners.



Shark Deep Clean Pet™
Dispensed from the CarpetXpert tank. Used for deep-cleaning carpets with the floor nozzle.



Shark OXY Multiplier™
Dispensed from the StainStriker™ tank. Combines with Deep Clean Pet from the CarpetXpert Tank to be used at the hand tool for stain cleaning.

1. Filling the CarpetXpert Tank (top tank). ①
- Lift the CarpetXpert Tank by the handle to detach it, then remove cap by unscrewing it.
- Add warm water to the tank up to the WATER fill line. Do not use water hotter than 140°F (60°C).
- Add Shark Deep Clean Pet up to the CONCENTRATE fill line.
- Reattach the cap, then reinstall the CarpetXpert tank, making sure it securely clicks into place.

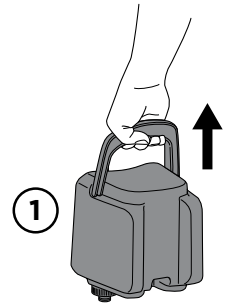

Note: When cleaning on the floor, solution is only dispensing from the CarpetXpert Tank.

2. Filling the StainStriker Tank (smaller, blue tank). ②
- Lift the StainStriker Tank by its sides to detach it, then remove the cap.
- Add Shark OXY Multiplier up to the MAX FILL line.
- Reattach the cap, then reinstall the tank, making sure it securely clicks into place.

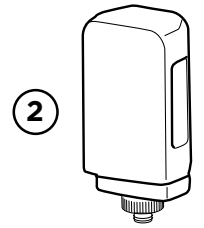

Note: When cleaning with the hand tool above floor, both CarpetXpert tank and StainStriker tank are being used. The StainStriker tank dispenses at a slower rate than the CarpetXpert Tank.

Tip: Use carry handle on the back of unit **(G)** for easy transport on stairs. To reduce carry weight, fill tanks after moving unit to the area you are cleaning.

To order cleaning solutions, scan the QR code or go to sharkclean.com

DEEP CLEANING WITH CARPETXPERT

DEEP CLEANING with the brushroll: ***Uses Deep Clean Pet Formula and water.***

Important: *CarpetXpert is not a vacuum cleaner and is not designed for dry vacuuming. Before using CarpetXpert, first remove pet hair and other debris with a traditional vacuum cleaner.*

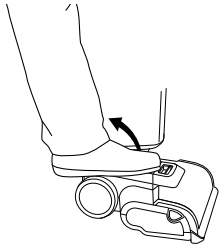

1. Gently step on the floor nozzle and tilt the handle back.
2. Press power button; unit will enter Deep Clean Mode.
3. Move unit forward; it will automatically dispense water and Deep Clean Pet formula.
4. Move unit back to dry with suction only (does not dispense fluid on back stroke).
5. Repeat steps 3 and 4 on the same area once.

Tip: Carpet cleaners are designed to move slower than a traditional vacuum. For best results, push and pull CarpetXpert at intervals of a few feet in a slower pace than you would a vacuum.

WARNING: Moving too slowly will oversaturate carpets. Be sure to not stay in place while the unit is reclined in Deep Clean Mode.

WHILE IN DEEP CLEAN MODE

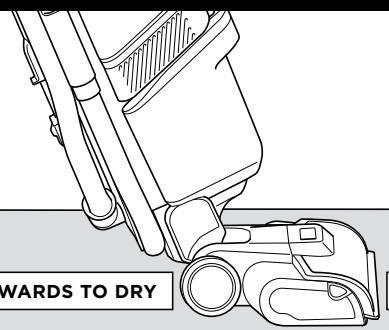

Tip: No clumps left behind! To pick up clumps, move forward slowly.



Rinsing: Some users may want to rinse their carpet after cleaning. To do this, fill CarpetXpert Tank with only water, and repeat cleaning steps.

Dry Only Mode

After deep cleaning is complete, it may take a few hours for the carpet to dry. For quicker dry times, use Dry Only Mode. This mode will turn off liquid and will dry while moving forward and backward.

Note: Dry Only Mode should ONLY be used after Deep Cleaning Mode. You do not need to switch back and forth between the two modes while cleaning. Using Dry Only Mode once Deep Cleaning is complete will help reduce dry times.

Area Rugs
Check manufacturer's tag prior to cleaning and follow all guidelines. We **DO NOT** recommend cleaning delicate rugs (including wool, cotton, silk, antique, or rugs that **DO NOT** have a manufacturer's tag).
We recommend first testing a small, discrete area of the rug to make sure it is okay to clean.
Tip: Be mindful of edges when cleaning area rugs. If your area rug has decorative or loose fibers, do not run CarpetXpert near edges.

CLEANING WITH HAND TOOLS

SPRAY

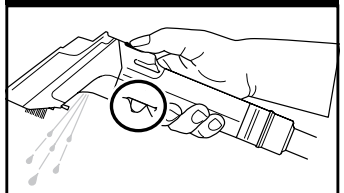

fig. 7

SCRUB

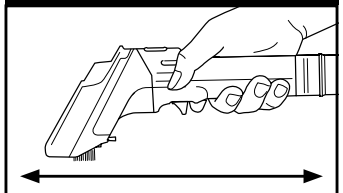

fig. 8

EXTRACT

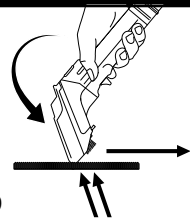

fig. 9

STAIN CLEANING with a hand tool:
Uses Deep Clean Pet Formula + OXY Multiplier.

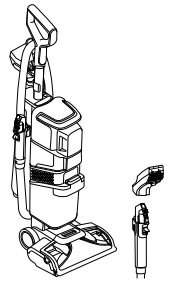

1. To clean with a hand tool, make sure the unit is in the upright position, then unwrap the hose and attach a hand tool to the end of it.
2. When the Mini Stain Eliminator is removed from the holder on the side of the unit, StainStriker mode is automatically activated.
3. For wet stains, use a stain eliminator hand tool to suction up the mess **(fig. 9)**, then spray the stained area **(fig. 7)**. Scrub the stain with the bristles on the tool, **(fig. 8)** then tilt the tool up **(fig. 9)** and drag it across the stained area to extract the mess. Repeat if needed.
   For dry stains, first scrub with the bristles to break up the stain, then follow the steps shown in figures 7-9 to remove the stain.
4. When finished, return the hand tool to its holder or use Rinse & Go to clean hose.

Tip: For improved suction, tilt the angle of the tool forward **(fig. 9)**. More extracted liquid will appear in the window on the tool as suction increases.

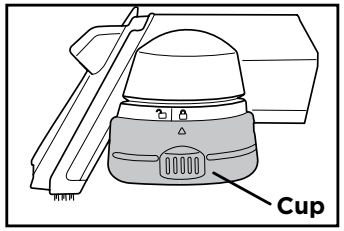

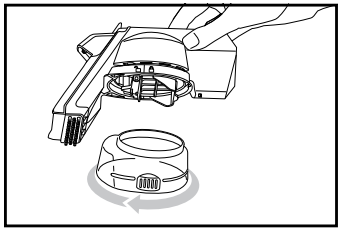

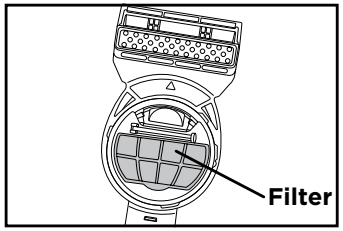

The **Pet Mess Extractor Tool** is included with select models. The tool extracts wet pet messes, while preventing them from reaching the interior of the hose or unit. Use on wet pet messes only. **DO NOT** use to remove pet hair. To use, first spray the wet mess, then extract it with the tool. Do not overspray or oversaturate the mess. Make sure that the extracted mess does **NOT** exceed the **MAX FILL** line on the tool cup. Keep the tool level, without tipping, to prevent spills and leakage. After use, turn off the CarpetXpert power and empty the waste from the tool cup into a toilet. Wash the cup, filter, and the rest of the tool thoroughly with soap and water after every use.

See following pages for Hand Tool Accessory guides, tips, and maintenance. →

MINI STAIN ELIMINATOR (INTEGRATED)

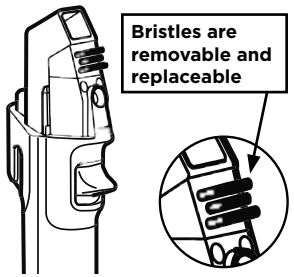

✓ **Difficult Stains** ✓ **Tight Corners**
✓ **Light Hair Pickup** ✓ **Use with Solution (wet)**
✓ **Rinse & Go**

TIPS:

- Use the rubber nubs on the Mini Stain Eliminator rather than the bristles when cleaning softer fabrics and to avoid hair tangling in the bristles. Replaceable bristles and nubs are available for sale at sharkclean.com.
- Bristles are intended for deeper stain cleaning.

Maintenance: Wash the bristles before storing if needed. To clean, follow the Using Rinse & Go With Hand Tools instructions in the Maintenance section.

3.5” STAIN ELIMINATOR

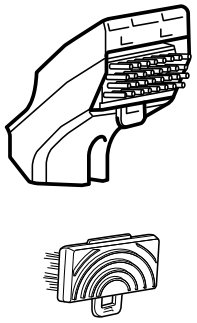

✓ **Difficult Stains** ✓ **Use with Solution (wet)**
✓ **Light Hair Pickup** ✓ **Rinse & Go**

TIPS:

- When cleaning softer fabrics, avoid hair tangles by using the rubber nubs on the tool rather than the bristles.
- Bristles are intended for deeper stain cleaning.
- When removing hair, use shorter strokes to avoid clumps. Remove hair as soon as it appears. Do not let it accumulate.
- Make sure to clean the hose regularly using Rinse & Go.
- To remove large amounts of hair, use the Pet Hair Extractor tool.

Maintenance: Remove the window and reversible bristles from the stain eliminator and wash them before storing. Clean the hose after each use. See the Using Rinse & Go With Hand Tools instructions in the Maintenance section.

7” XL STAIN ELIMINATOR (SELECT MODELS)

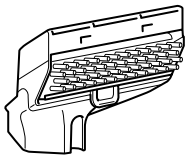

✓ **Larger Area Stains** ✓ **Use with Solution (wet)**
✓ **Light Hair Pickup** × **Rinse & Go**

TIPS:

- This tool is similar to the 3.5” Stain Eliminator but its cleaning path is twice as wide.
- Intended for larger jobs including sofas, stairs, and large stains.

Maintenance: Refer to the 3.5” Stain Eliminator maintenance section above.

HAND TOOLS: USAGE, TIPS, AND MAINTENANCE

PET HAIR EXTRACTOR

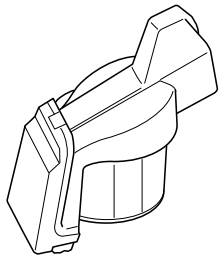

✓ **Surface Stains** ✓ **Use Dry or with Solution (wet)**
✓ **Heavy Hair Pickup** × **Rinse & Go**

TIPS:

- Use a back-and-forth scrubbing motion in short strokes to pull up hair or break down a stain.
- When removing a large amount of hair, use shorter strokes to avoid clumps. Remove hair as soon as it appears. Do not let it accumulate.
- To maintain suction power, make sure to regularly dispose of the liquid from the cup.
- Make sure to clean the hose regularly by removing the Pet Hair Extractor tool and using Rinse & Go with the Mini Stain Eliminator tool.
- Do not empty the cup into toilets or drains, as that may cause clogs.

Maintenance: Regularly remove the cup and filter from the tool and empty debris into the trash to maintain strong suction. Remove the window on the tool and wash it before storing.

PET MESS EXTRACTOR (SELECT MODELS)

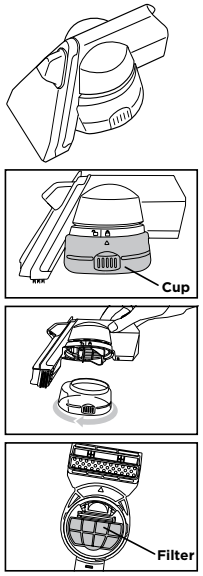

✓ **Liquid Pet Messes** ✓ **Use with Solution (wet)**
× **Spot Cleaning** × **Rinse & Go**

TIPS:

- Not intended for solid messes or for picking up hair.
- Before cleaning liquid messes, first use a paper towel to pick up any solids and dispose of them in the trash.
- Spray the mess with solution, and use short back-and-forth strokes with the tool to scrub the mess and suction-up the solution.
- Make sure to keep the tool level, without tipping, to prevent dirty liquid from entering the hose and unit interior.
- Periodically dump out the dirty liquid from the cup in the tool to maintain suction power.
- **DO NOT** exceed the **MAX FILL LINE** on the Pet Mess Extractor cup to keep messes from entering the interior of the hose or unit.

Maintenance: Remove the window from the tool and wash it before storing. To clean the hose, see the Using a Rinse & Go With Hand Tools instructions in the Maintenance section on the next 2 pages.

Tip: Clean unit after every use to avoid odors, bacteria, and mold.

Note: When turning off the power, it will take 2 to 3 seconds for the unit to clear the lines and power down completely.

DIRTY WATER TANK

Note: When the dirty water tank is full, there will be a change in motor noise or airflow, and the indicator light will flash blue. The CarpetXpert unit will also turn off.

1. Press the release button and remove the tank **(fig. 1)**.
2. Lift out lid with float **(fig. 2)**. **DO NOT** pour out dirty water until float is fully removed.
3. Pour dirty water from the tank down a drain.
4. Empty dirty water from tank **(fig. 3)**. Dump hair and debris out of the non-removeable hair cage into the trash **(fig. 4)**. Rinse the dirty water tank and the hair cage inside.
5. Remove the filter cover, then lift out the filter. Wash the filter with soap and water, then allow it to air-dry completely before reinstalling.
6. Be sure to return the filter to the dirty water tank before reinstalling it. For long-term storage, allow tank to air-dry completely before reinstalling it.

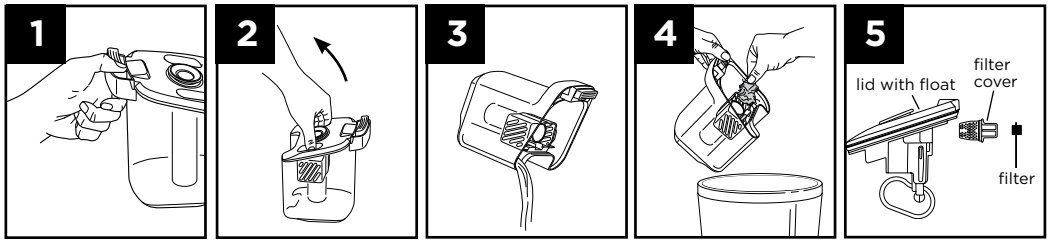

BRUSHROLL

1. Pull the latch to remove nozzle cover **(fig. 1)**.
2. Open the inner cover by lifting it by the tabs marked **PULL (fig. 2)**.
3. Remove the brushroll by pulling up on the side tab **(fig. 3)**. If hair is wrapped, cut it away by running scissors along the groove in the brushroll. Rinse brushroll, cover, and doors and allow them to air-dry before reinstalling.
4. To reinstall the outer cover, connect the 2 hooks at the bottom, then push forward until it clicks into place **(fig. 4)**.

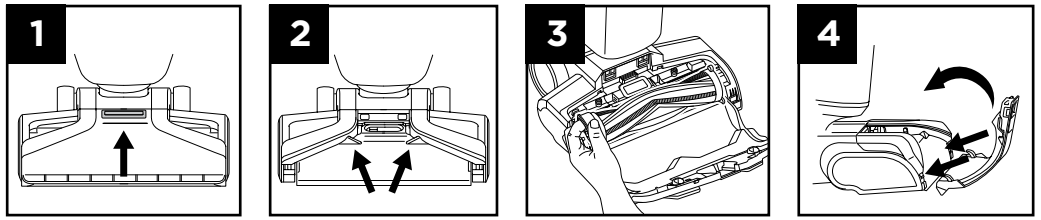

Note: Use a paper towel to wipe away any debris on interior of the inner cover.

USING RINSE & GO WITH HAND TOOLS

Rinse & Go can be used with the Mini Stain Eliminator and the 3.5" Stain Eliminator. To clean the interior of these tools and the hose:

1. Turn on power to the unit.
2. Insert the tip of the hand tool into the Rinse & Go groove on top of the CarpetXpert tank. Press the tool down onto the button to suction up cleaning solution **(fig.1, fig.2)**.
3. Tilt tool back and forth for optimal liquid flow **(fig. 3)**.
4. After cleaning is complete, hold the tool high and let unit run for 3 seconds.
5. Turn off power.

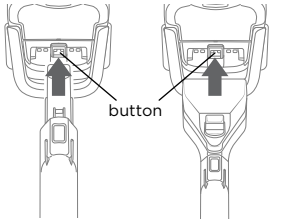

fig. 1 **fig. 2** **fig. 3**

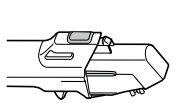

Mini Stain Eliminator

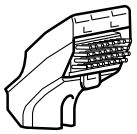

3.5" Stain Eliminator

Tip: If hose is not fully clean, shake it gently back-and-forth while using Rinse & Go.

CHECKING FOR DEBRIS

To check airpath for clogs, hair, or debris:

1. Unplug unit.
2. Remove dirty water tank.
3. Remove seal **(fig. 10)**.
4. Detach the hose by squeezing the clips on the hose attachment. **(fig. 11)**.
5. Remove any clogs by pulling the change-over valve while the unit is in the upright position **(fig. 12).**
6. Remove any debris and rinse the change-over valve if needed.
7. Reattach all parts. Make sure the change-over valve clicks securely into place **(fig. 13)**.
8. Check the connection where the hose attaches to the bottom of the unit and clean out any debris **(fig. 14)**.

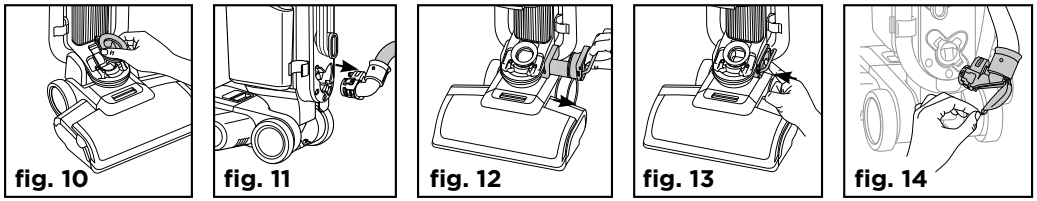

CLEANING THE DIVERTER VALVE

Clean the diverter valve behind the brushroll if you are doing a deep clean of the CarpetXpert unit.

1. Remove the brushroll **(fig. 1)**.
2. Press the release button at the top of the diverter valve **(fig. 2)**, then pull out the valve **(fig. 3)**.
3. Use a damp cloth or paper towel to wipe away any debris on the valve or in the opening.
4. Rinse the valve and wipe with paper towel before reinserting to unit.
5. Reinsert the valve and secure it by pushing firmly until it clicks into place **(fig. 5)**.

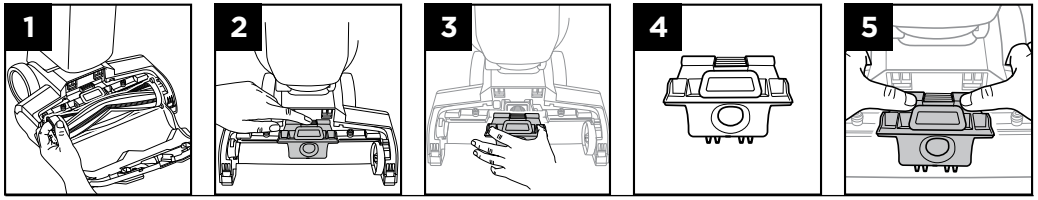

INDICATOR LIGHTS

LED Warnings

Door Open	Dirty Water Tank Full	Valve Error	Brushroll Jam
			
Both blinking red	**Both blinking blue**	**Top blinking red, bottom blinking blue**	**Steady red**

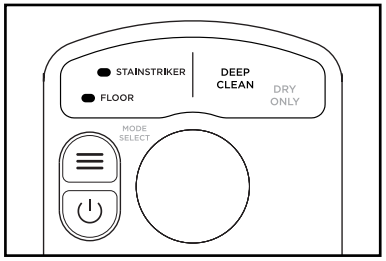

TROUBLESHOOTING

Purple Indicator Lights: High temperature alarm. Unit shut down due to overheating. Unplug and allow to cool for 10 minutes.

Valve Error Occurred: Reset unit by turning off. This Valve Error will trigger if you are moving forward only or backward only for an extended period of time. Use CarpetXpert in shorter back and forth motions. Follow steps in CHECKING FOR DEBRIS section under maintenance to check for clogs.

Leaking: Be sure the hose is inserted all the way, hearing 2 clicks when connected properly and the caps on the tanks are tightened.

Poor suction: Make sure all parts are connected securely and the hose clicks twice when attaching it to the back of the unit. See CHECKING FOR DEBRIS section above for more information. If issue is not resolved, remove parts and put them back in to make sure they are fully inserted.

Hand tool not spraying: Be sure valves and hose are properly inserted. See CHECKING FOR DEBRIS and CLEANING THE DIVERTER VALVE sections under maintenance for removal and insertion tips. Both solution tanks should be full and fully inserted. Unit needs to be in upright position to use hand tool.

Floor nozzle not dispensing solution: Be sure the solution tanks are full. Make sure the change-over valve is properly installed and clicks securely into place. Make sure unit is fully reclined and in Deep Clean Mode.

Oxy Multiplier is not being dispensed: Be sure tanks are attached securely. OXY Multiplier is only dispensed when using hand tools for above-floor cleaning.

The Dirty Water Tank Full indicator lights are on, but the tank is not full: Make sure the change-over valve is installed properly. See CHECKING FOR DEBRIS section for more information. Remove the tank, empty the water and non-removable hair cage, reinstall it, then restart the unit. Error could be due to a full hair cage.

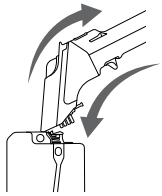

Rinse & Go is not working with a hand tool: Be sure that the tip of the clear window is fully inserted into the Rinse & Go groove. If Rinse & Go is still not working, rock the hand tool back and forth to improve liquid flow.

No Clumps left behind: To pick up clumps, move forward slowly over remaining hair.

Debris is stuck in the hose: While using Rinse & Go, tap or shake the hose to help clear debris.

Oversaturated Carpets: Passing over cleaned areas in Dry Only Mode will help reduce dry times. Dry times will vary based on cleaning speed, carpet type and humidity. See DEEP CLEANING WITH CARPETXPERT section for cleaning tips.

Note: To buy cleaning solution, accessories, or replacement parts, visit sharkclean.com.

Note: The StainStriker tank dispenses at a slower rate than the CarpetXpert Tank and only when using hand tools.

Shark | NINJA

FIVE (5) YEAR LIMITED WARRANTY

FIVE (5) YEAR LIMITED WARRANTY

The Five (5) Year Limited Warranty applies to purchases made from authorized retailers of SharkNinja Operating LLC. Warranty coverage applies to the original owner and to the original product only and is not transferable.

SharkNinja warrants that the unit shall be free from defects in material and workmanship for a period of Five (5) years from the date of purchase when it is used under normal household conditions and maintained according to the requirements outlined in the Owner's Guide, subject to the following conditions and exclusions:

What is covered by this warranty?

1. The original unit and/or non-wearable parts deemed defective, in SharkNinja's sole discretion, will be repaired or replaced up to Five (5) years from the original purchase date.
2. In the event a replacement unit is issued, the warranty coverage ends six (6) months following the receipt date of the replacement unit or the remainder of the existing warranty, whichever is later. SharkNinja reserves the right to replace the unit with one of equal or greater value.

What is not covered by this warranty?

1. Normal wear and tear of wearable parts (such as Shark Cleaner, Pad, etc.), which require regular maintenance and/or replacement to ensure the proper functioning of your unit, are not covered by this warranty. Replacement parts are available for purchase at **sharkaccessories.com**.
2. Any unit that has been tampered with or used for commercial purposes.
3. Damage caused by misuse, abuse, negligent handling, failure to perform required maintenance, or damage due to mishandling in transit.
4. Consequential and incidental damages.
5. Defects caused by repair persons not authorized by SharkNinja. These defects include damages caused in the process of shipping, altering, or repairing the SharkNinja product (or any of its parts) when the repair is performed by a repair person not authorized by SharkNinja.
6. Products purchased, used, or operated outside North America.

How to get service

If your appliance fails to operate properly while in use under normal household conditions within the warranty period, visit sharkclean.com/support for product care and maintenance self-help. Our Customer Service Specialists are also available at **1-800-798-7398** to assist with product support and warranty service options, including the possibility of upgrading to our VIP warranty service options for select product categories. So we may better assist you, please register your product online at registeryourshark.com and have the product on hand when you call. SharkNinja will cover the cost for the customer to send in the unit to us for repair or replacement. A fee of $25.95 (subject to change) will be charged when SharkNinja ships the repaired or replacement unit.

How to initiate a warranty claim

You must call **1-800-798-7398** to initiate a warranty claim. You will need the receipt as proof of purchase. We also ask that you register your product online at **registeryourshark.com** and have the product on hand when you call, so we may better assist you. A Customer Service Specialist will provide you with return and packing instruction information.

How state law applies

This warranty gives you specific legal rights, and you also may have other rights that vary from state to state. Some states do not permit the exclusion or limitation of incidental or consequential so the above might not apply to you.

PLEASE READ CAREFULLY AND KEEP FOR FUTURE REFERENCE.

This Owner's Guide is designed to help you get a complete understanding of your new Shark® CarpetXpert™ HairPro® Pet.

SharkNinja Operating LLC
US: Needham, MA 02494
CAN: Ville St-Laurent, QC H4S 1A7

1-800-798-7398
sharkclean.com

Illustrations may differ from actual product. We are constantly striving to improve our products, therefore the specifications contained herein are subject to change without notice.

This product may be covered by one or more U.S. patents. See sharkninja.com/patents for more information.

© 2024 SharkNinja Operating LLC. HAIRPRO and SHARK are registered trademarks of SharkNinja Operating LLC. CARPETXPERT and STAINSTRIKER are trademarks of SharkNinja Operating LLC.

EX300Series_IB_MP_Mv39

@sharkcleaning