Step 2

Model Width - Finished Opening(Width) = Cut Off Length

Finished Opening (Width)			46"	47"	48"
Finished Opening (Width)	50"	51"	52"	53"	54"
Finished Opening (Width)	56"	57"	58"	59"	60"
Cut Off Length	4"	3"	2"	1"	

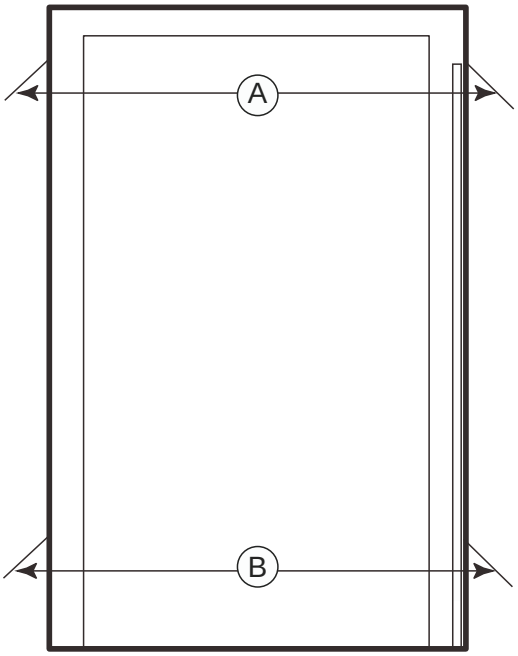

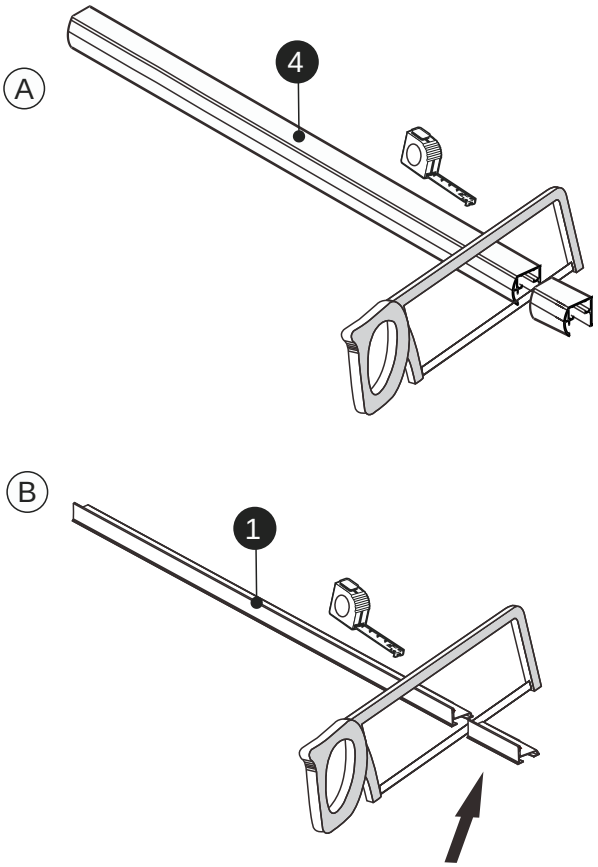

Measure the drip rail with a tape measure. Cut the length according to installer's recommendation.

Step 3

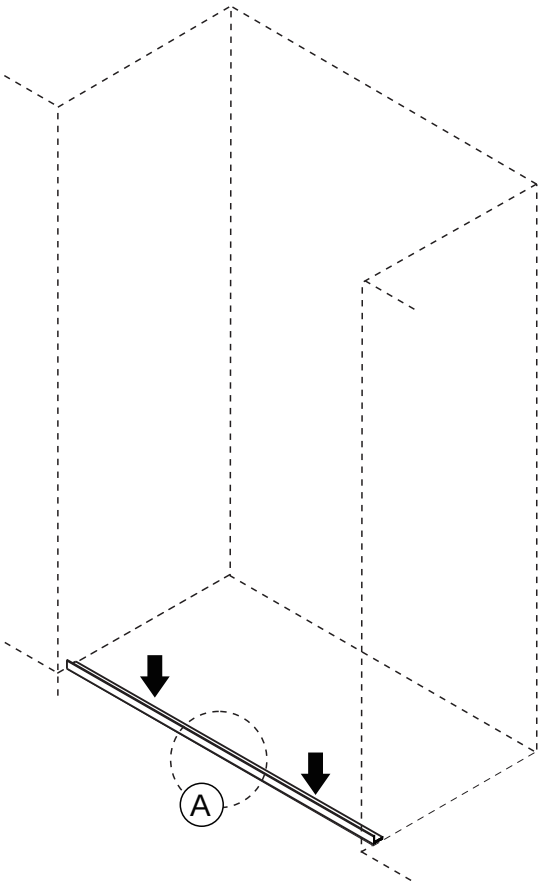

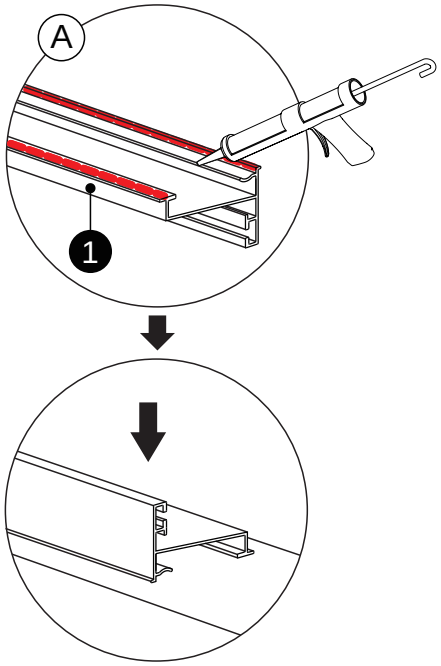

Step 4

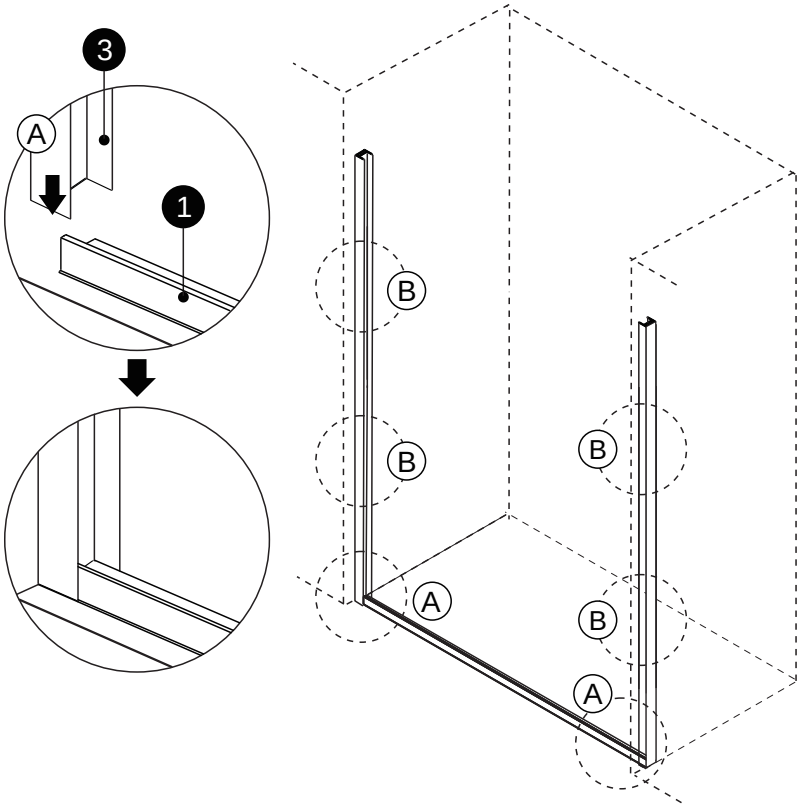

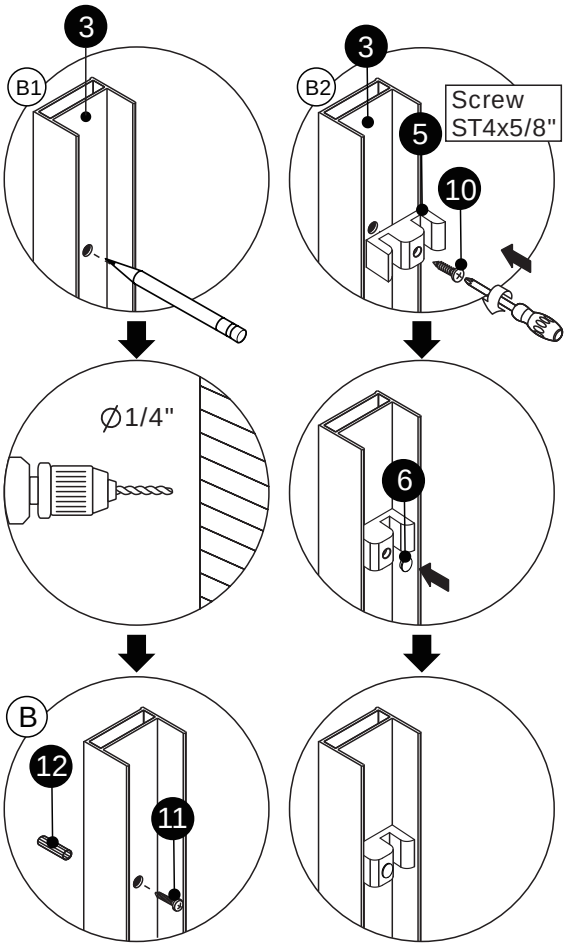

Step 5

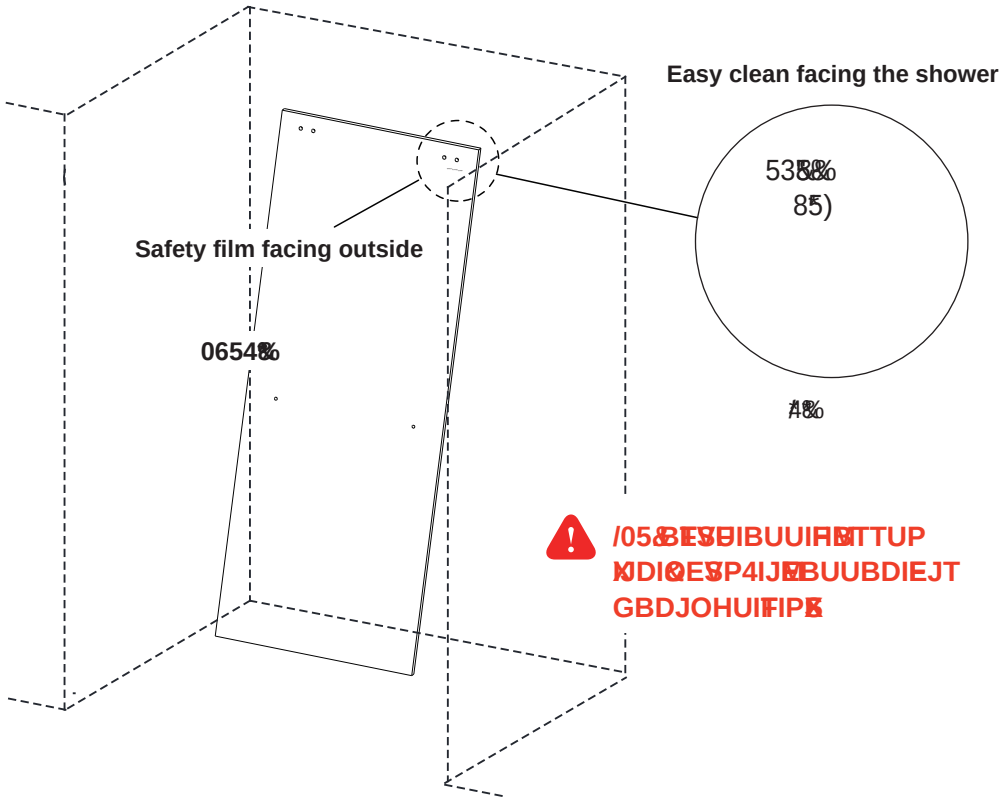

Step 6

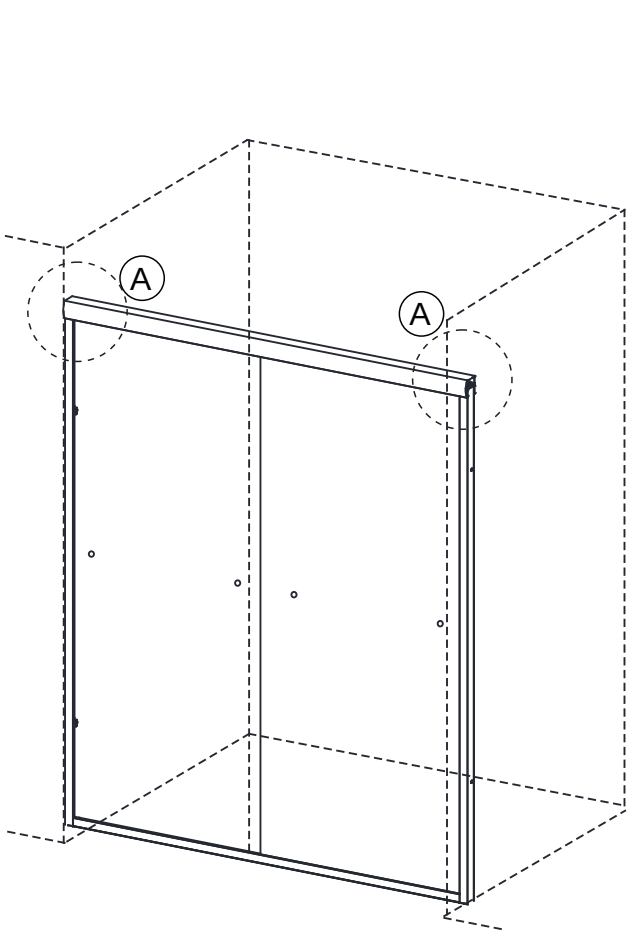

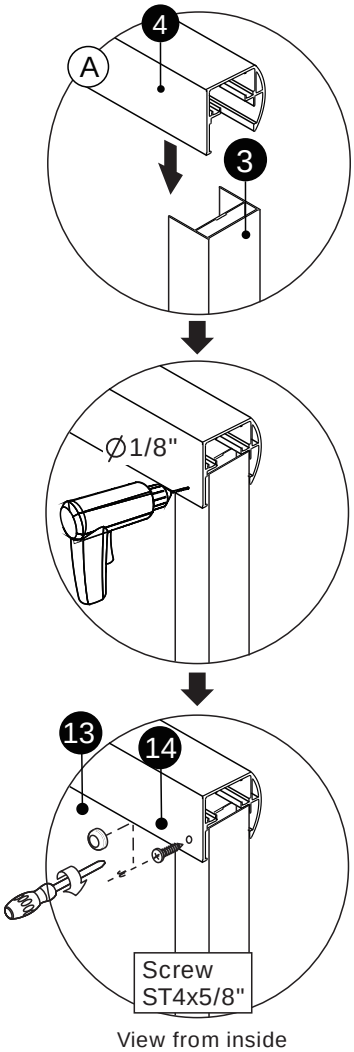

View from inside

Step 7

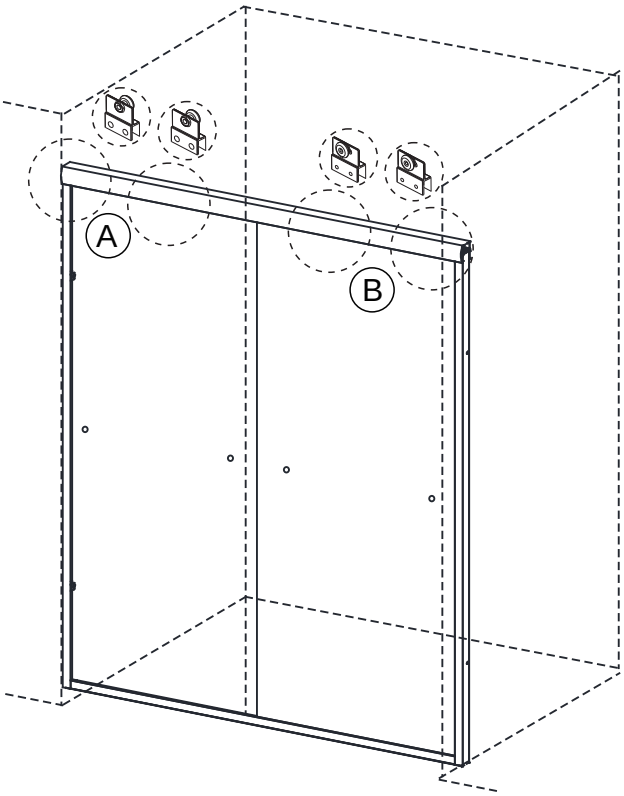

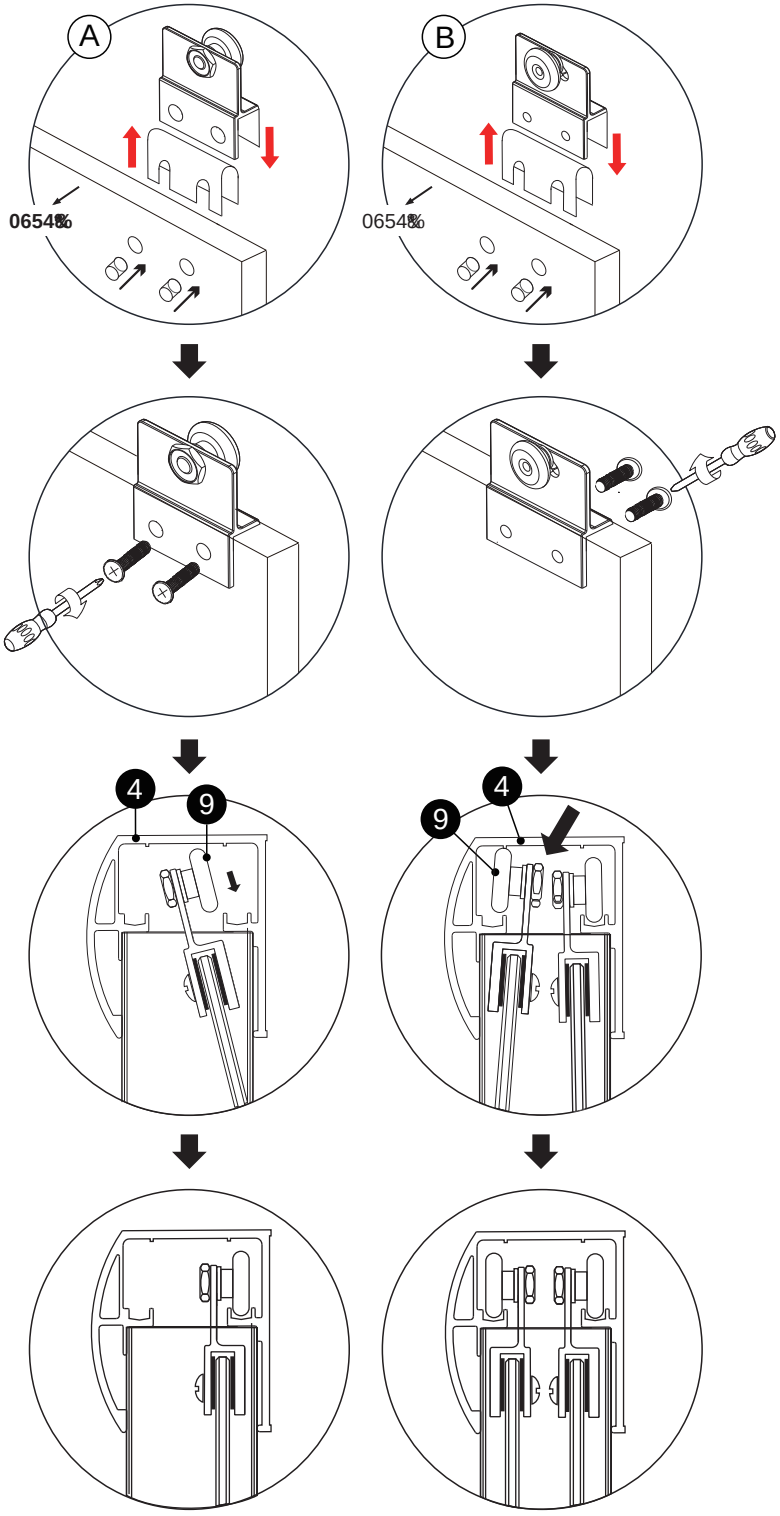

Step 8

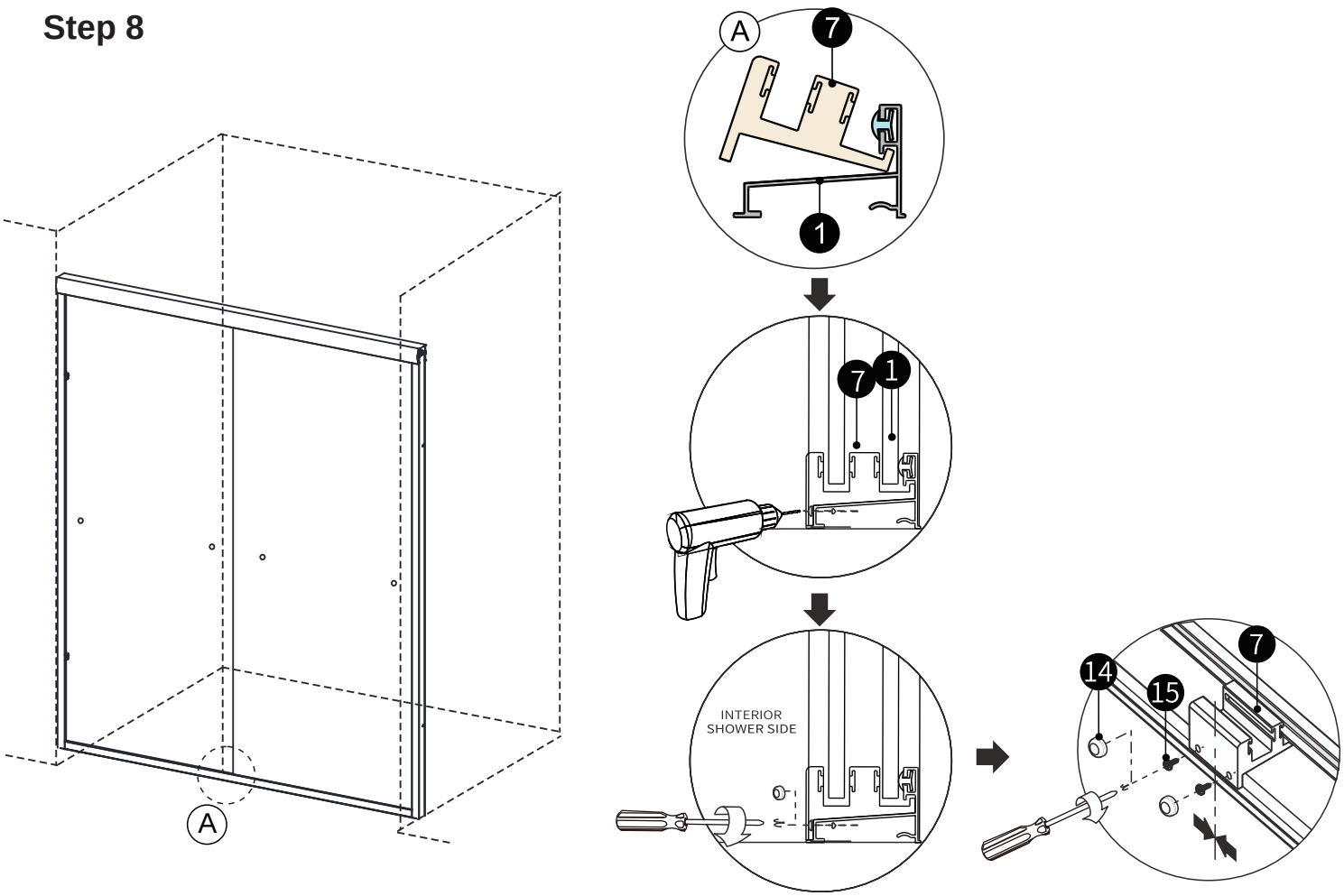

Step 9

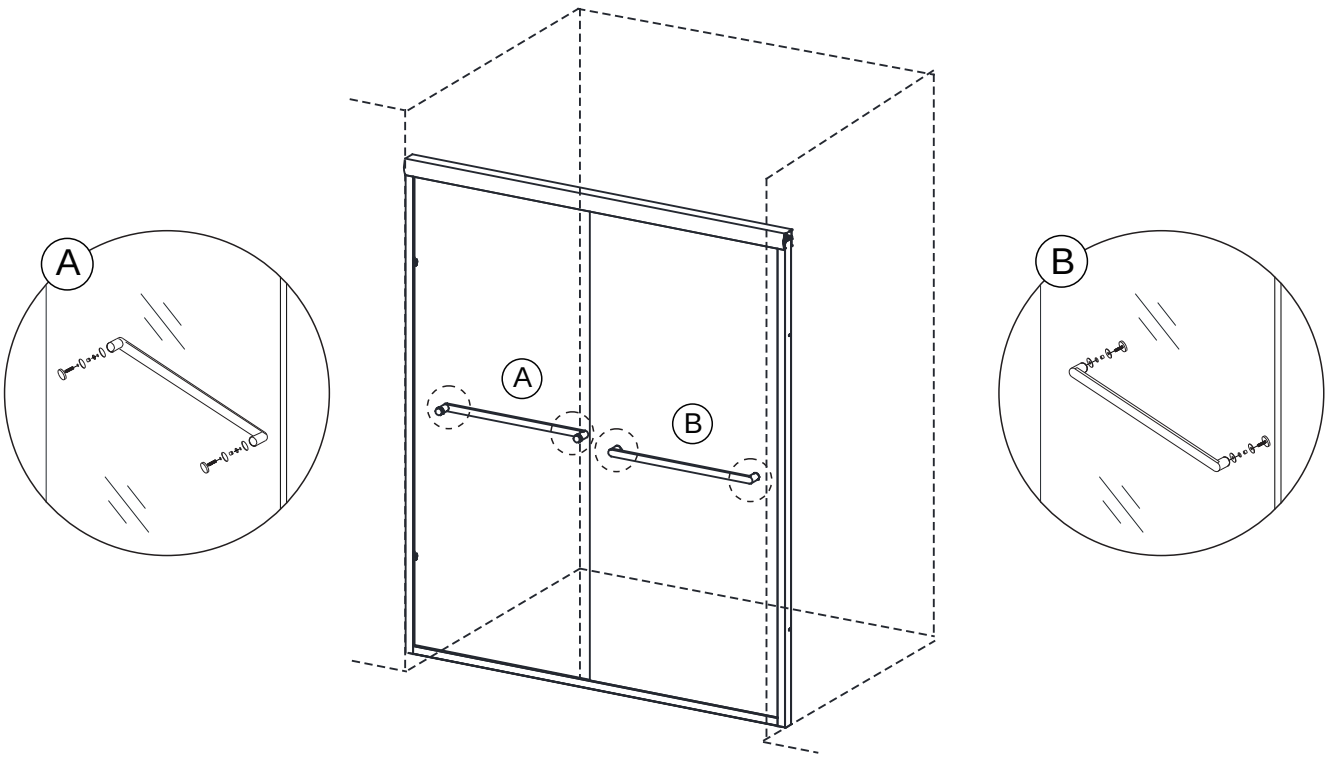

Step 10



24 HOURS

Allow 24 hours for silicone to dry before use.

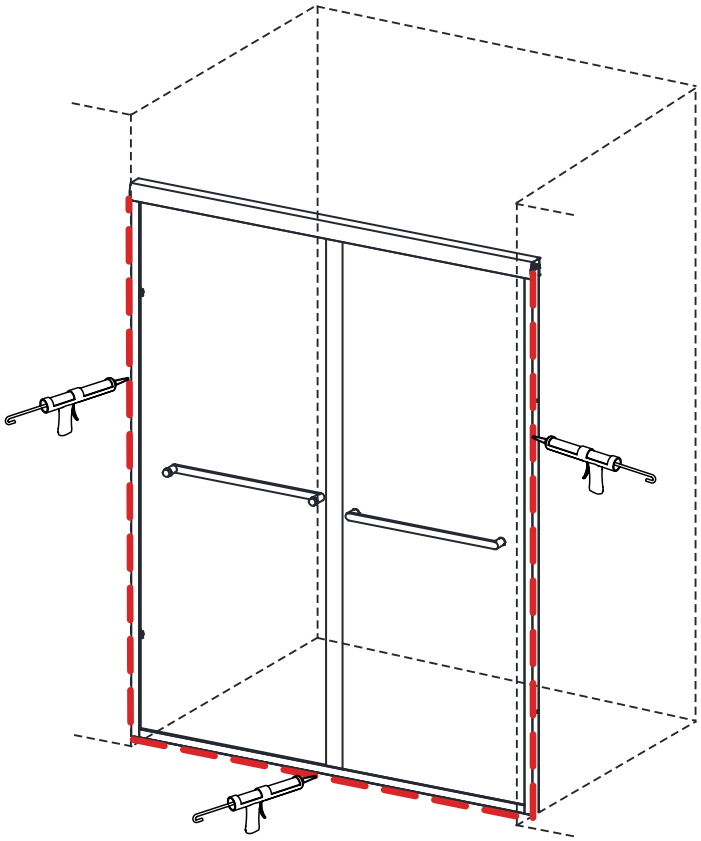



24 HOURS

Allow 24 hours for silicone to dry before use.

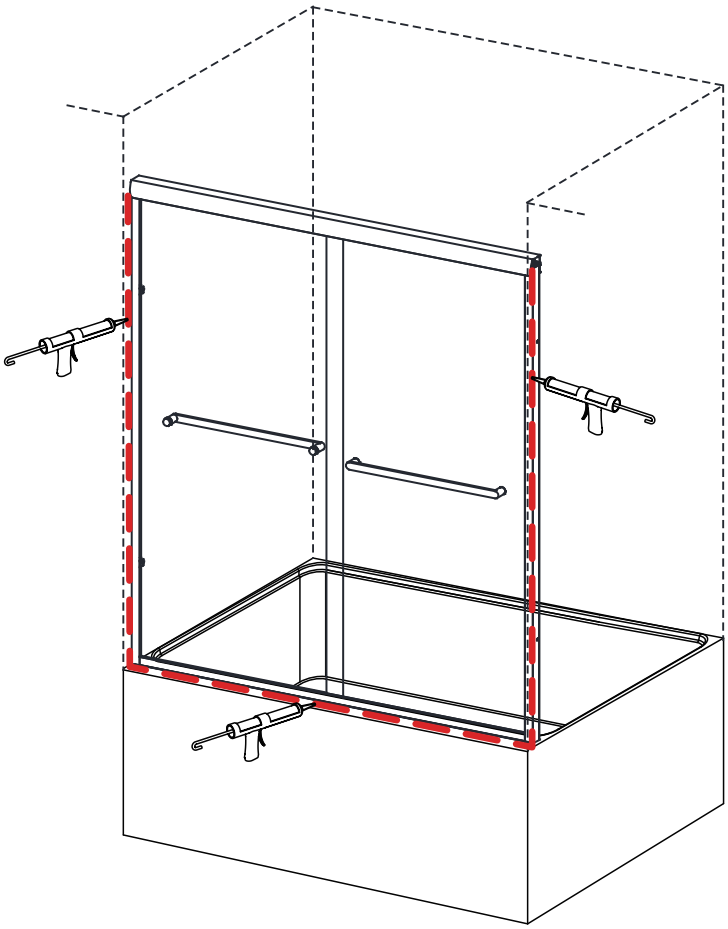

◆Product Maintenance

BASES and BACKWALLS: To ensure long lasting life for your acrylic back walls: wipe them off after each use with a soft cloth. To clean the acrylic back walls use non-abrasive sprays or cream based cleaners. Avoid the use of aerosol spray cleaners. Never use abrasive cleansers, metal brushes or scrapers that could scratch or dull the surface.

GLASS: To ensure long lasting life for your glass shower products: wipe them off after each use with a soft cloth. Rinse and wipe off the glass using either a soft cloth or a squeegee to prevent soap buildup and water spots (Hard water can etch the surface of the glass over time if left to dry). To prevent scratching the surface: never use abrasive cleaners or cleaning products that contain scouring agents. Never use bristle brushes or abrasive sponges that may scratch the surface.

HARDWARE: To ensure a long lasting finish: wipe off the metal parts after each use with a soft cloth. Do not use abrasive cleaners or cleaning products containing ammonia, bleach or acid. If accidentally used, rinse the surface as soon as possible to prevent damage to the finish (peeling or corrosion). After cleaning the polished finishes, rinse thoroughly and wipe dry with soft cloth. Clean stainless steel surfaces at least once a week. When applying stainless steel cleaner or polish to stainless steel hardware, work with (not across) the grain. Never use an abrasive sponge or cloth, steel wool or wired brush as these may permanently scratch the surfaces.

NOTE: To maximize the life of your door, it is important to regularly inspect the glass and other hardware for misalignment, proper attachment, and/or damage. Contact us with any questions or concerns.

Please provide the belowing information if you have any qaustions.

1. order number:
2. description of the issue:
3. who install it? installer or yourself?
4. some photos or video of the issue:
5. If you need replacement parts, please circle the part you need on the page 2, then send the photo to us.
6. your address and phone number (if you need something re-shiped) :

We will give you a solution as soon as possible.

Customer service

For more information about our products, please contact us below:

+1 (909)999-0175

sales@onwithhome.com

Do not return product to the store.Contact us directly with any questions.