BEFORE FIRST USE:

IMPORTANT

Before first use, allow the dehumidifier to stand upright for 24 hours.

During transit, the dehumidifier may have been tilted or laid on its side, which can cause internal fluids like compressor oil to move around. Letting it stand upright gives everything time to settle, ensuring the dehumidifier works properly from the start.

This is a normal precaution and does not indicate any issue with the dehumidifier.

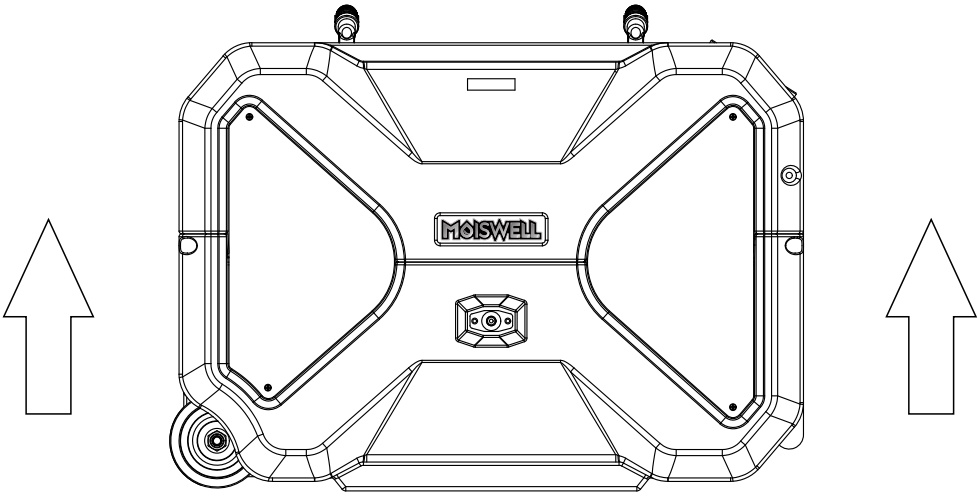

Parts Identification

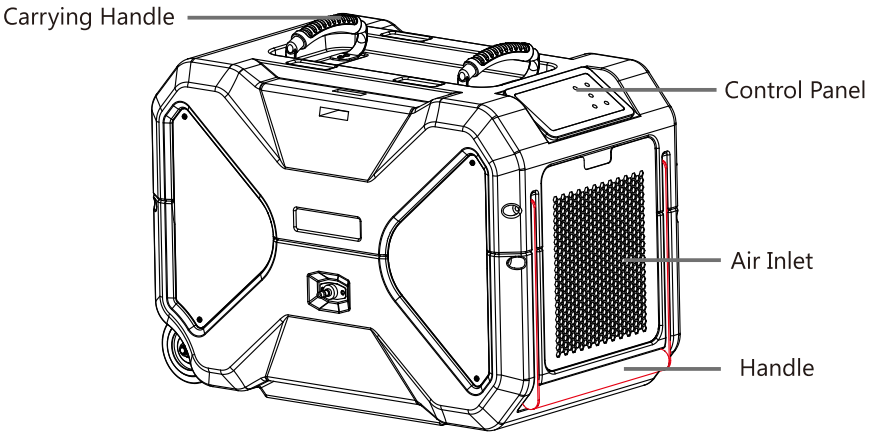

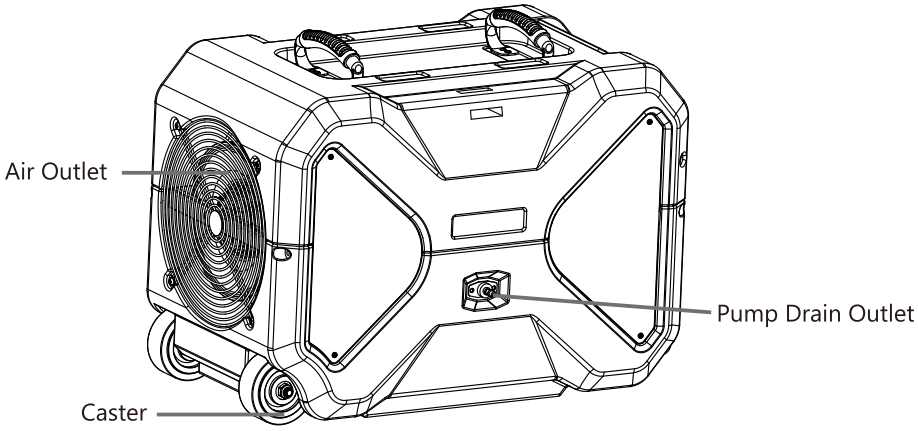

Note: Do not obstruct the air inlet and/or outlet.

Operation Instructions

1. Move the Dehumidifier

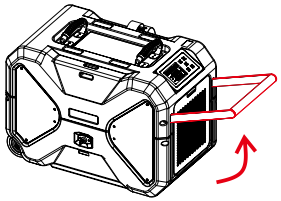

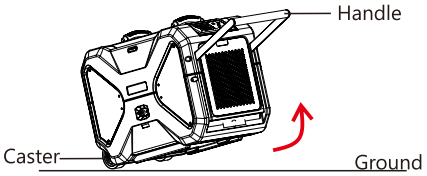

(1) Lift the handle.
(2) While holding the handle, gently raise the dehumidifier off the ground.
(3) Pull the dehumidifier forward and move it to the desired location.
Note: Avoid tilting the dehumidifier more than 45° while moving. If the dehumidifier is tilted beyond 45° during movement, allow it to stand upright for at least 30 minutes before powering it on to ensure proper refrigerant settling.

2. Position Your Dehumidifier

(1) Place the dehumidifier on a flat, stable surface to reduce vibration and noise.
(2) Maintain at least 6 ft of clearance around the dehumidifier. Ensure nothing blocks the air inlet or outlet.
(3) For best performance, operate the dehumidifier in a closed space. Keep all doors and windows shut during operation.

3. Set the Drain Hose

The dehumidifier features a built-in pump designed for upward drainage and comes with a 16.4 ft drain hose for convenient water removal.

To set up the drain hose:

- Securely attach the provided drain hose to the pump drain outlet. If using an alternative hose (inner diameter 0.2 in / 5 mm), ensure it fits tightly to prevent leaks.
- Position the other end of the hose in a sink, floor drain, sump pit, or outside a window—any location where water can drain safely.
- Make sure the hose is free from kinks, twists, or blockages to allow smooth water flow.

Note:

- The pump automatically activates when the internal water level reaches a certain point.
- Use the Purge function by holding the Power button for at least 5 seconds to manually activate the pump—useful before moving or storing the dehumidifier to prevent spills or mould.
- If the dehumidifier fails to drain automatically, contact service@moiswell.com for support.
- The pump can drain water vertically up to 16.4 ft. Exceeding this height may cause water backup or leakage.

• Avoid using an excessively long hose, as it may lead to incomplete drainage and mould growth.
• If draining into a bucket or container, check it regularly to prevent overflow.

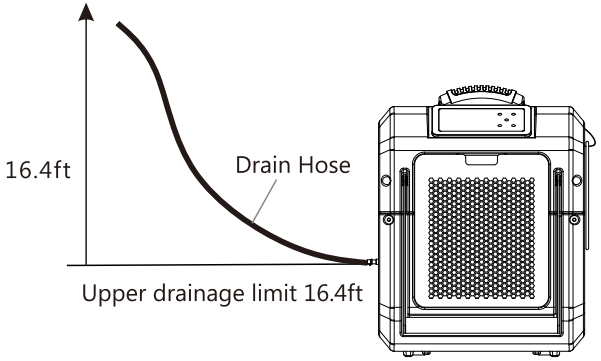

4. Plug in Electrical Cord

IMPORTANT

Please let the dehumidifier stand upright for **24 hours** before plugging in for the first time. During the shipping process, the dehumidifier may have been subjected to tilting or even placed upside down, which can cause the oil in the compressor to become unsettled. Hence, kindly make sure to follow this crucial step before using the dehumidifier.

To properly operate the dehumidifier, please plug it into a GFCI-protected 120-volt outlet with a rating of at least 14 amps. Uncoil the power cord and securely connect it to an appropriate outlet.

Note: When the dehumidifier is first plugged into AC power, the control panel display will light up for a second, which is part of the dehumidifier's self-diagnosis procedure and no action is required. This indicates that the dehumidifier is functioning correctly and ready to operate effectively. You will still need to press the POWER button to turn the dehumidifier on.