© COPYRIGHT 2025 - TAVERNS-TO-GO.COM

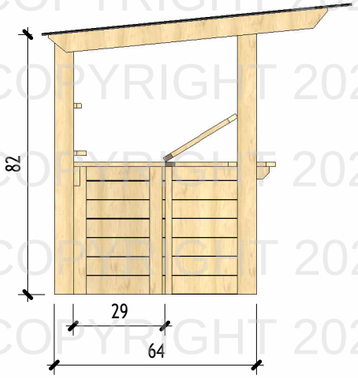

1 END VIEW - OPEN
1/4" = 1'-0"

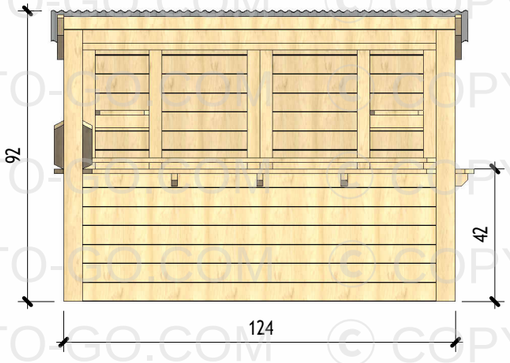

2 FRONT ELEVATION
1/4" = 1'-0"

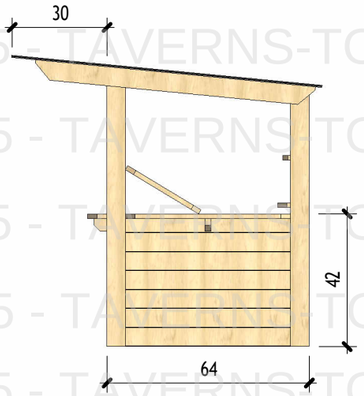

3 END VIEW - CLOSED
1/4" = 1'-0"

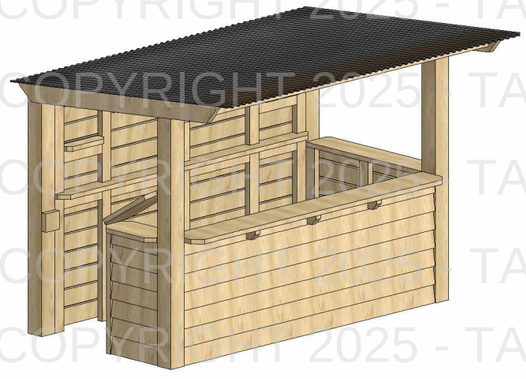

4 FRONT ISOMETRIC VIEW



5 REAR ISOMETRIC VIEW

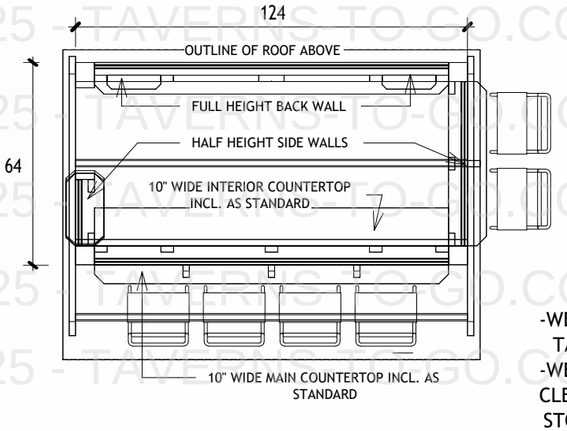

NOTES:
-WE RECOMMEND 30" TALL BAR STOOLS
-WE RECOMMEND 36" CLEARANCE FOR BAR STOOLS IF POSSIBLE

6 PLAN VIEW
1/4" = 1'-0"

Taverns To Go

TEL:
(929) 405-9918

EMAIL:
SALES@TAVERNS-TO-GO.COM

NOTE:
-FOOTPRINT MEASURES 10'-4" W X 5'-4" D
-DOOR CAN BE ADDED ON LEFT OR RIGHT SIDE OF BAR
-ALL DIMENSIONS ARE IN INCHES

DUNBAR (11' X 6') DELUXE

Project number	:	FB100.00
Date	: 6.16.25	
Drawn by	: GFINN	
Checked by	:	Scale 1/4" = 1'-0"

6/16/2025 9:39:13 PM