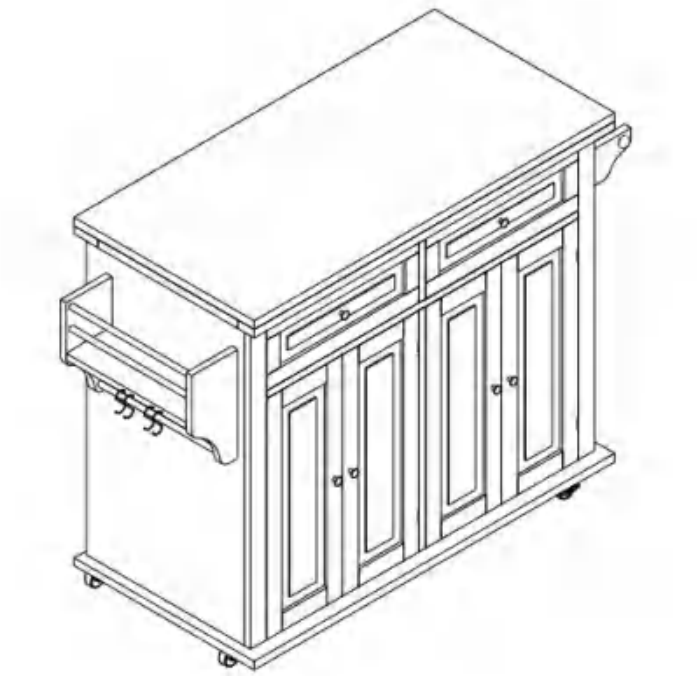

SAFETY INSTRUCTIONS

**WARNING:** Please read this manual carefully before using the product. Failure to do so may result in serious injury.

WARNING :

1. This kitchen island is intended for indoor household use only.
Not for commercial or outdoor use.
2. To prevent tipping, ensure the island is placed on a level, stable, flat surface.
3. Do not climb, stand, sit, or allow children to play on top, shelves, drawers, or doors.
4. Do not overload drawers, shelves, or cabinetry. Distribute weight evenly.
5. Keep fingers, hands, and children clear when closing drawers and doors to avoid pinching or injury.
5. Do not place hot items, flammable materials, or heavy objects near edges or on unstable surfaces.
6. Ensure all drawers and doors are securely closed before moving or cleaning.
7. Do not use if damaged, cracked, or unstable.
8. Use only in dry, indoor environments.
9. Do not expose to moisture or water.
10. Keep small parts and packaging away from children to avoid choking hazard. This product is not a toy.
11. Children should be supervised at all times.

CAUTION :

1. Follow assembly instructions carefully. Improper assembly may cause instability or injury.
2. Do not drag or push forcefully. Move with care to prevent damage or injury. Clean with a soft, dry cloth.
3. Do not use abrasive, flammable, or corrosive cleaners.
4. Do not expose to direct sunlight or extreme temperatures for prolonged periods. Regularly check and tighten all fasteners to maintain stability.

COMPLIANCE STATEMENT

This product is manufactured in compliance with applicable safety standards and regulations for the European Union, United Kingdom, United States and Canada.This product is for adult use only and is not a toy.

ASSEMBLY PRECAUTIONS

1. Assemble only according to these instructions. Improper assembly can create hazards.
2. Wear ANSI-approved safety goggles and heavy-duty work gloves during assembly.
3. Keep the assembly area clean and well-lit.
4. Keep bystanders out of the area during assembly.
5. Do not assemble when tired or when under the influence of alcohol, drugs or medication.
6. The product capabilities apply to properly and completely assembled products only.

SAVE THESE INSTRUCTIONS

TECHNICAL SPECIFICATIONS

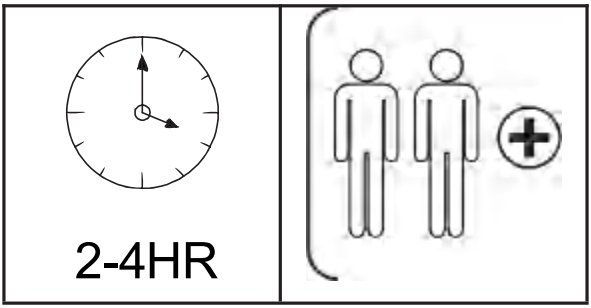

TIPS: Assembling thiscart will take approximately 2-4 hours,it is recommended that 2 people operate it.

***Products such as specifications,appearance,and design are subject to modification without prior notice.**

SPECIAL TIPS FOR FITTING CAM-LOCKS AND QUICKFIT

CAM-LOCK



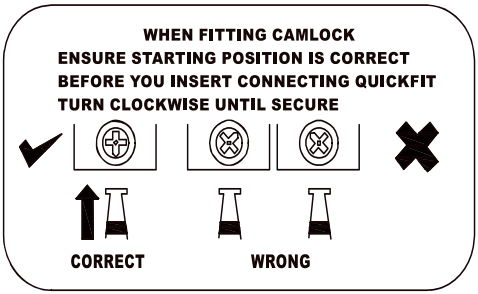

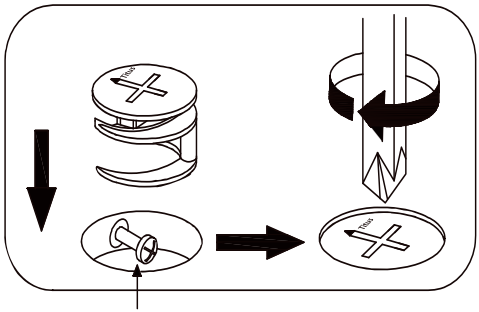

Quickfit head needs to be in centre

QUICKFIT

Tighten until shoulder is flush with panel.DO not overtighten or undertighten (see example below

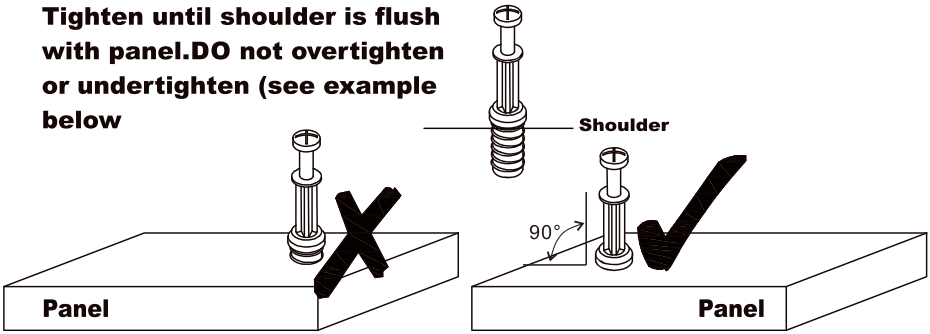

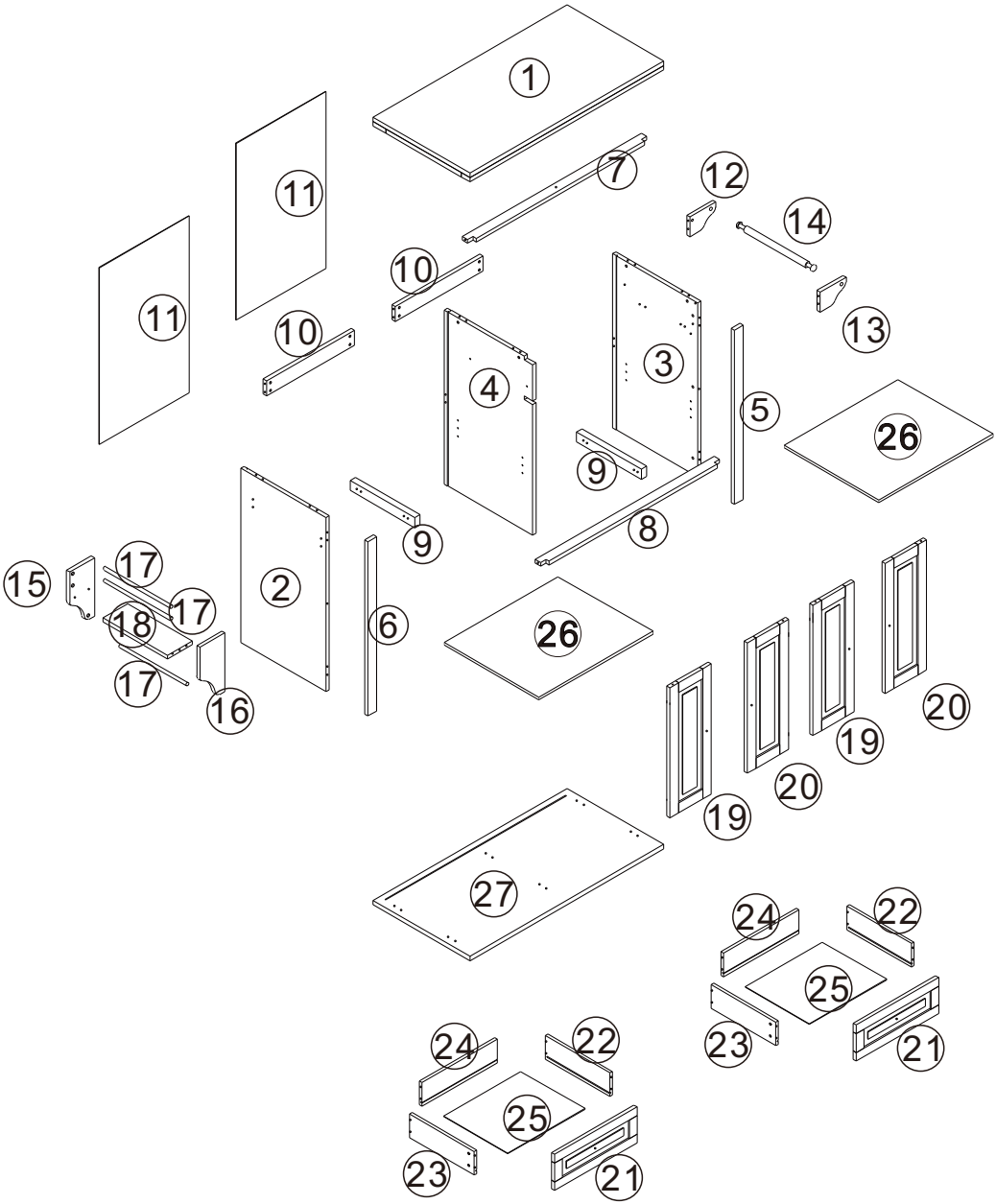
1
11
11
10
10
7
12
14
13
10
4
3
5
26
9
8
9
2
6
26
15
17
17
18
17
16
19
20
19
20
27
24
22
25
23
21
24
22
25
23
21

PARTS LIST

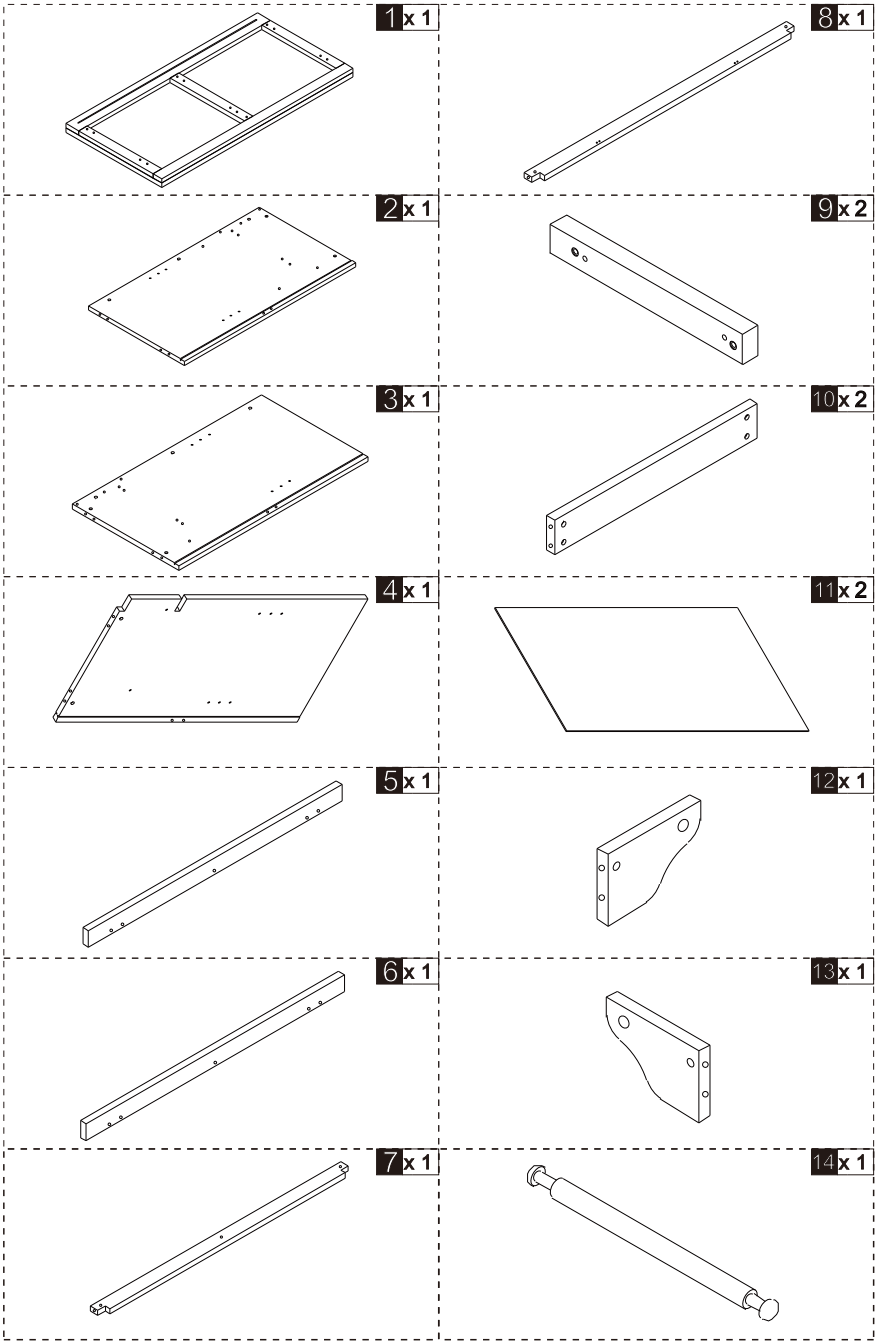

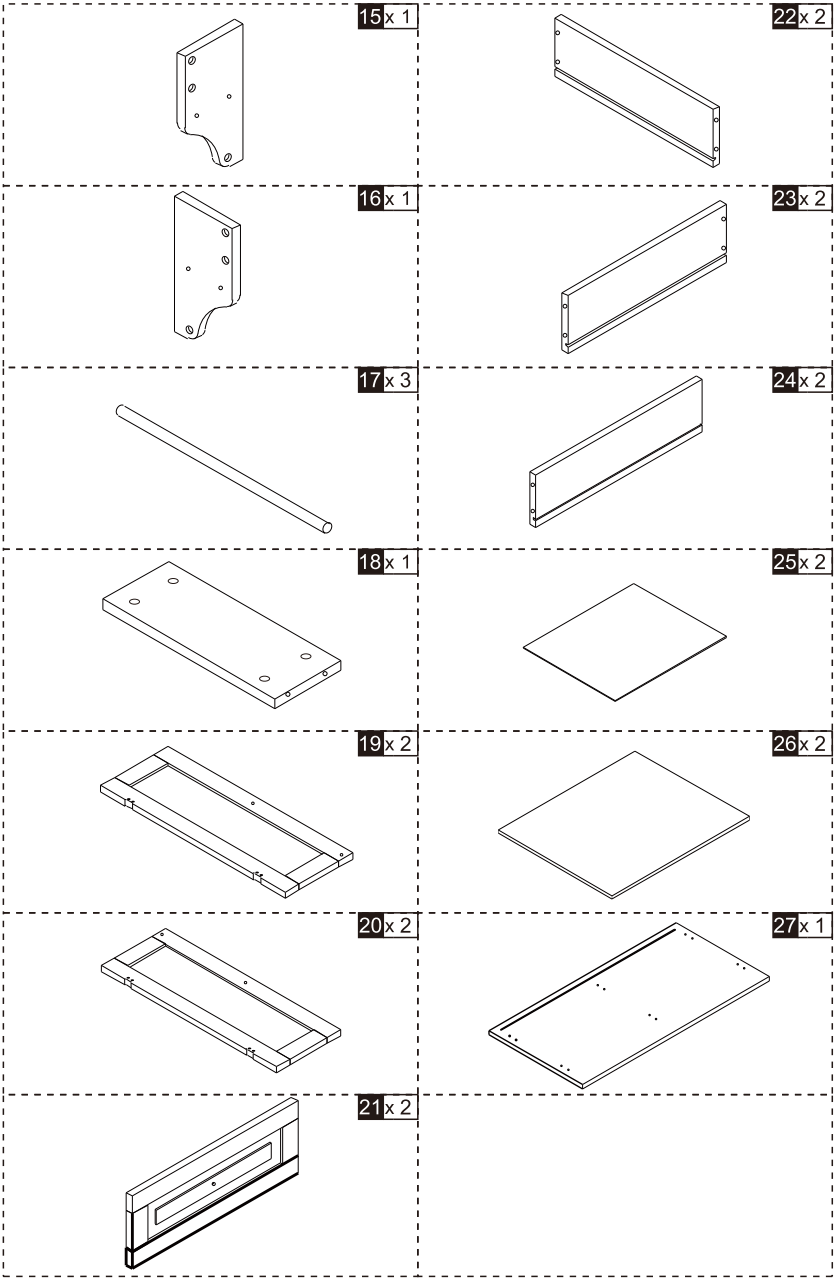
15 x 1
22 x 2
16 x 1
23 x 2
17 x 3
24 x 2
18 x 1
25 x 2
19 x 2
26 x 2
20 x 2
27 x 1
21 x 2

A x36 M6*35 +1(spare) 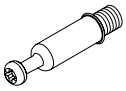	**H** x 2 M6*50 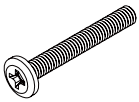	0 x4 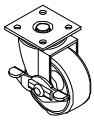	**CR** x 2 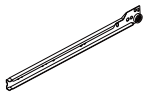
B x36 ∅15*10 +1(spare) 	**I** x 4 M4* 20 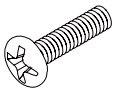	P x4 	**DL** x 2 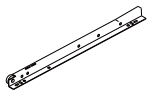
C x30 ∅6*30 +1(spare) 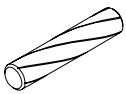	**J** x 4 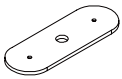	Q x8 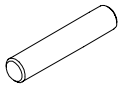	**DR** x 2 
D x 2 ∅10*10 	**K** x 8 +4(spare) 	R x 2 M4*10 	
E x20 M3*12 +1(spare) 	**L** x 2 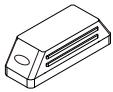	**S** x 6 	
F x23 M4*35 +1(spare) 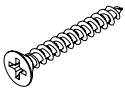	M x4 M3*14 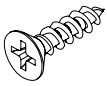	**T** x1 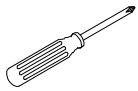	
G x16 M5*12 +1(spare) 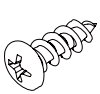	**N** x16 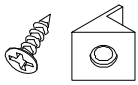	**CL** x 2 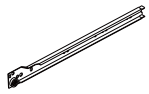	

ASSEMBLY STEPS

1

A x 6

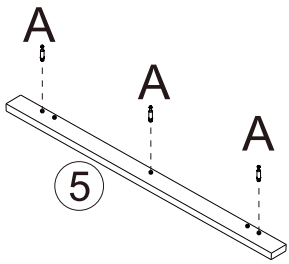

x2

2

C x 2

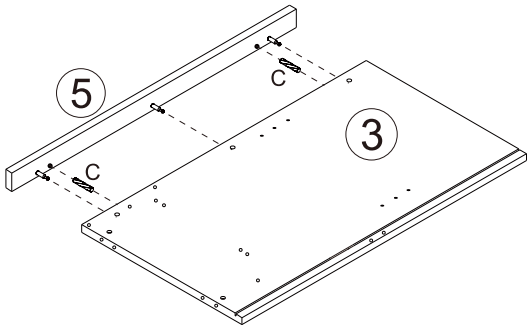

ASSEMBLY STEPS

3

	A x 4
	B x 3

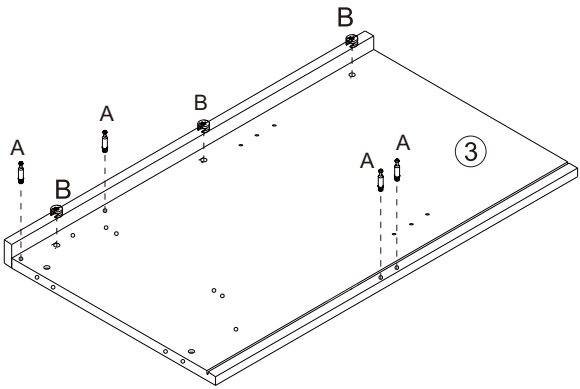

4

	C x 2
	Fx 2

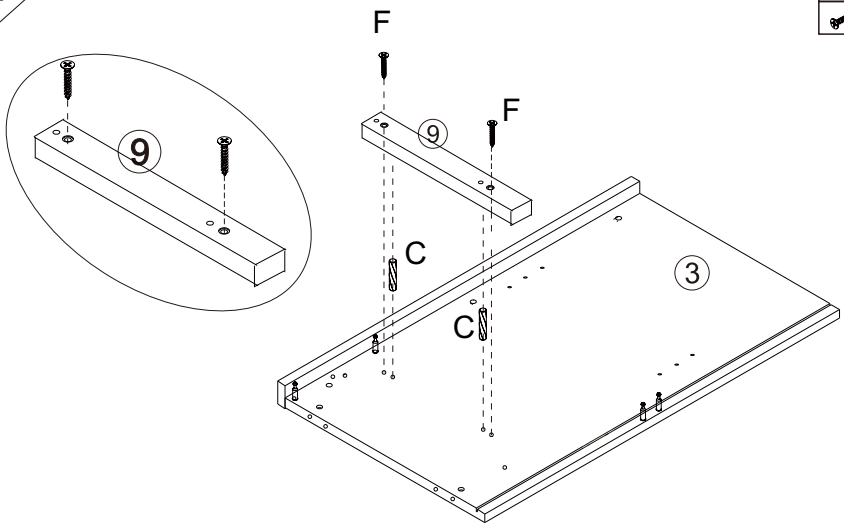

ASSEMBLY STEPS

5

C x 2

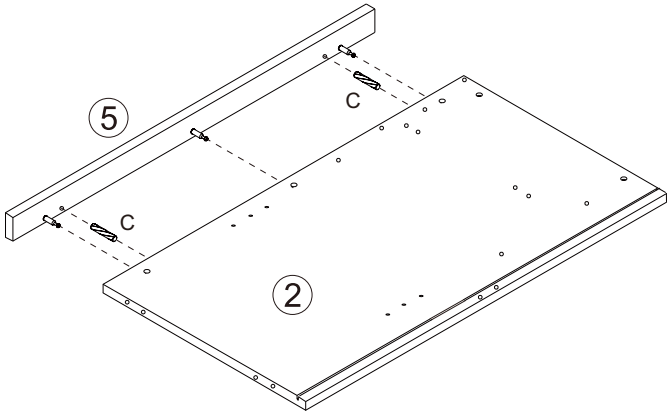

6

A x 4

B x 3

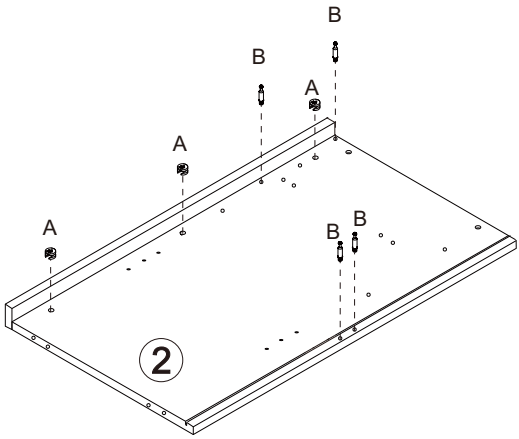

ASSEMBLY STEPS

7

	C x 2
	Fx 2

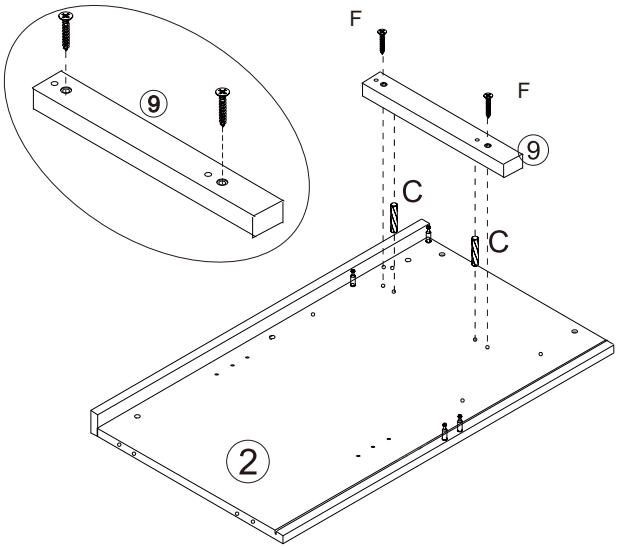

8

	E x 4
	CL x 1
	CR x 1

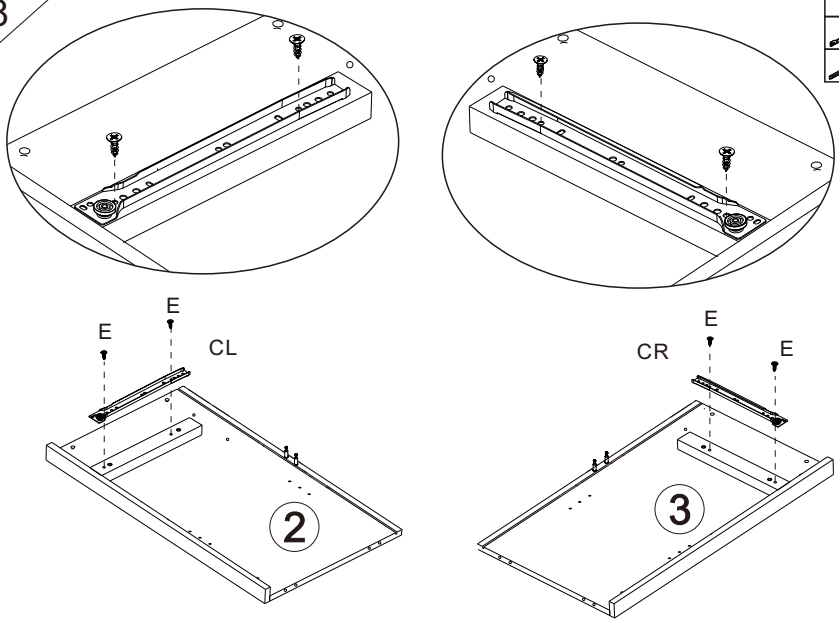

9

	A x 4
	E x 4
	CL x 1
	CR x 1

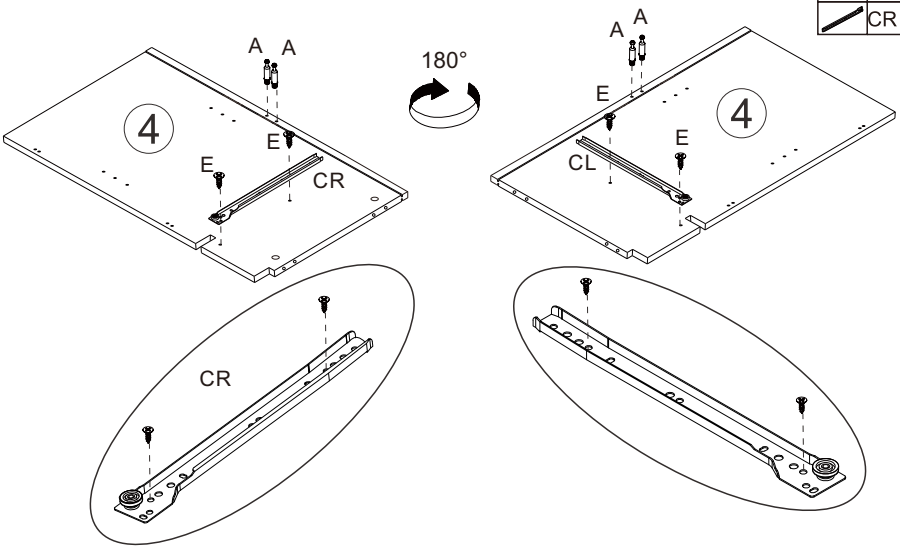

10

	B x 4

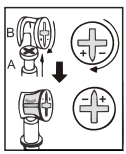

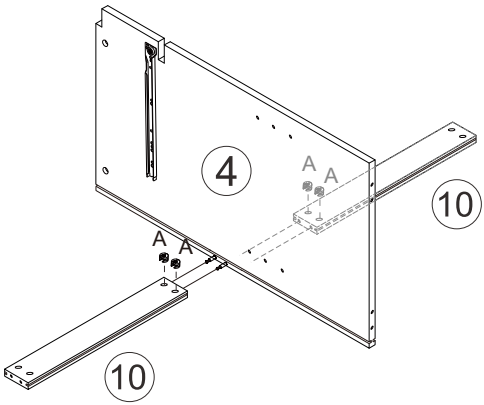

11

B x 4

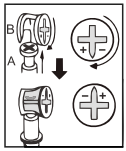

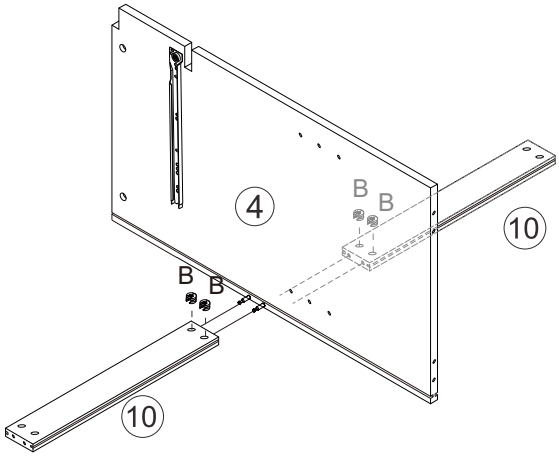

12

F x 1

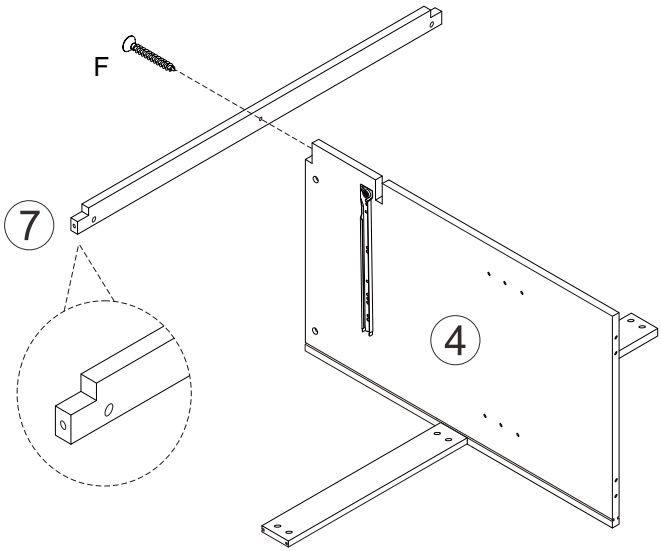

13

M x 4
L x 2

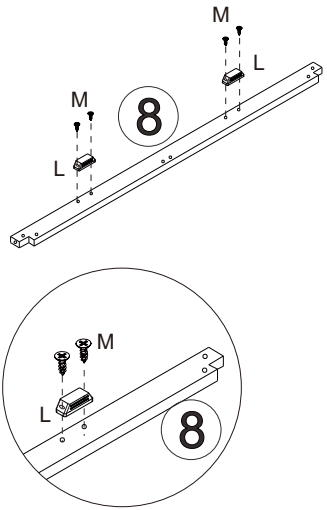
M
L
M
L
8
M
L
8

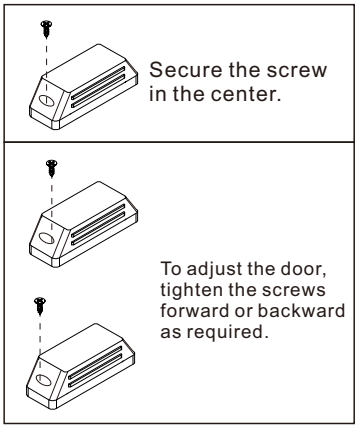
Secure the screw in the center.
To adjust the door, tighten the screws forward or backward as required.

14

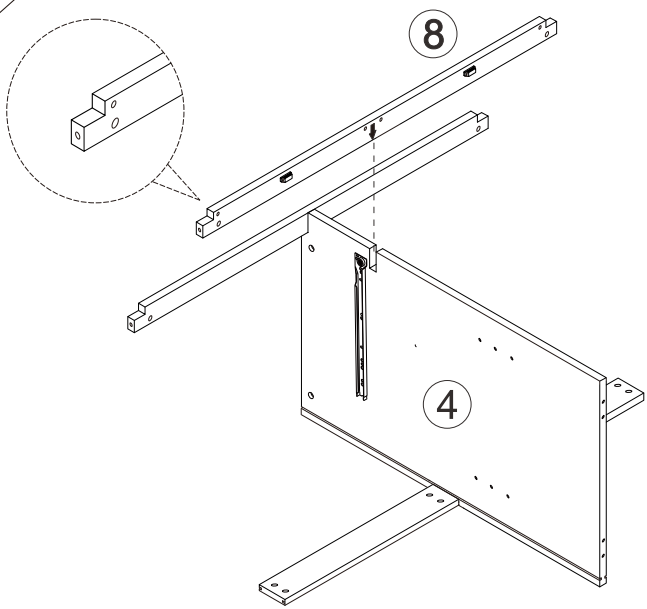
8
4

15

B x 4

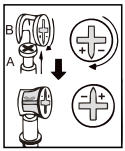

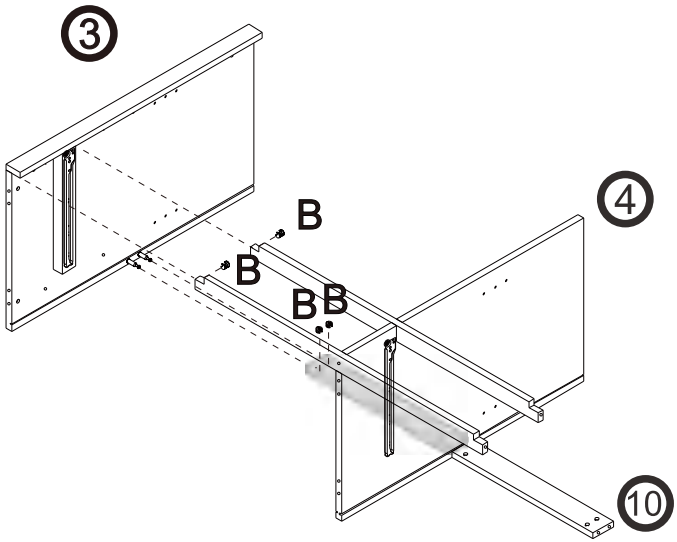

16

B x 4

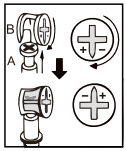

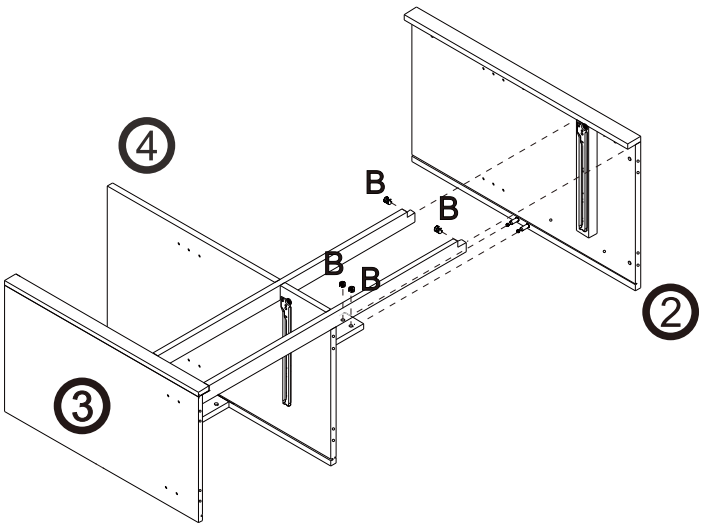

17

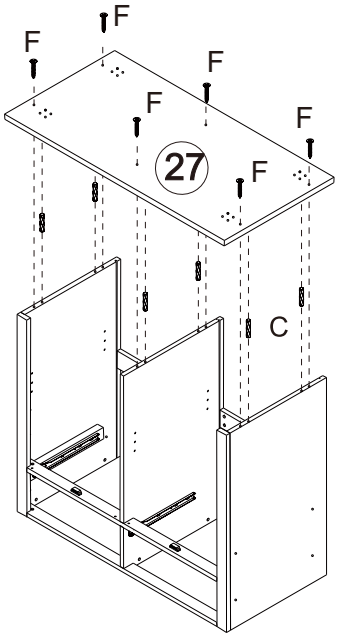

	C x 6
	F x6

18

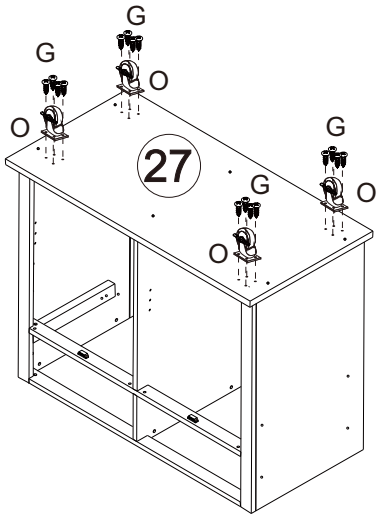

	Ox4
	Gx16

19

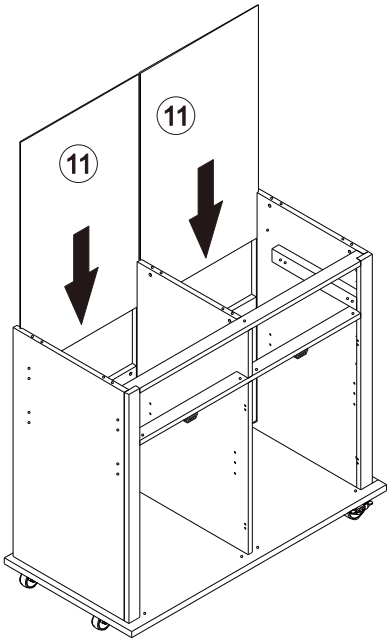

20

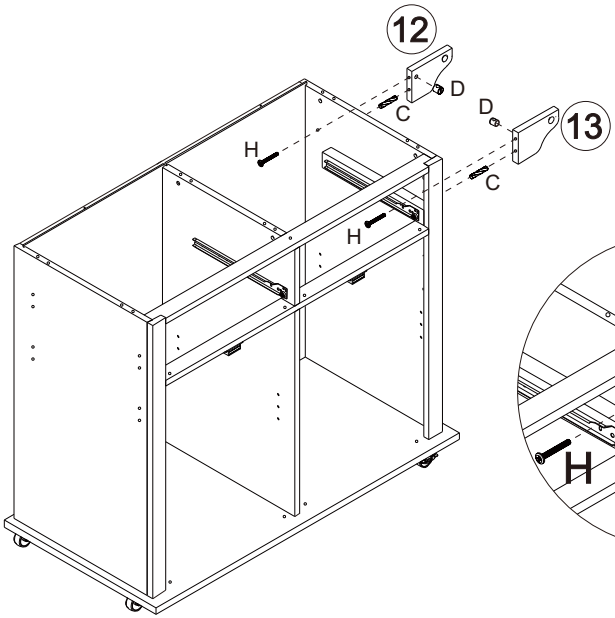

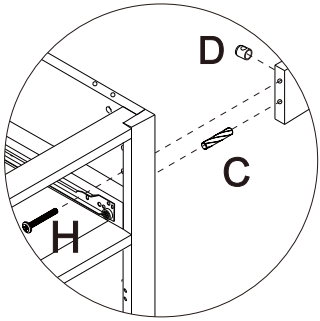

	D x 2
	H x 2
	C x 2

21

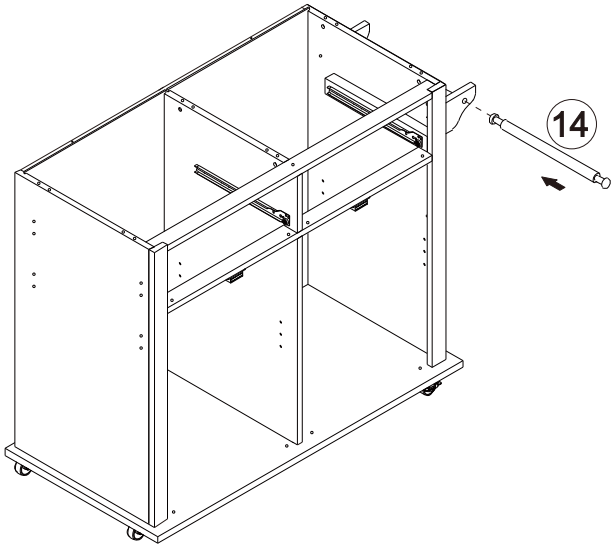

22

Ax4

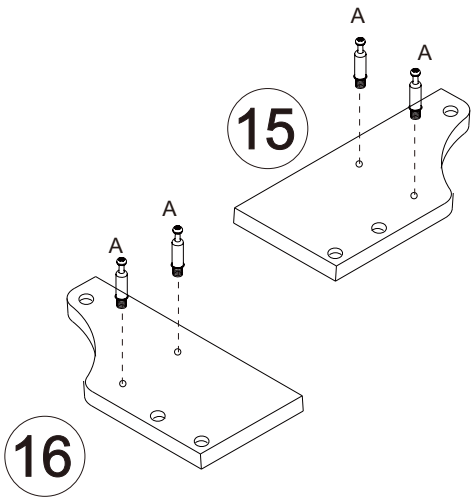

23

Bx4

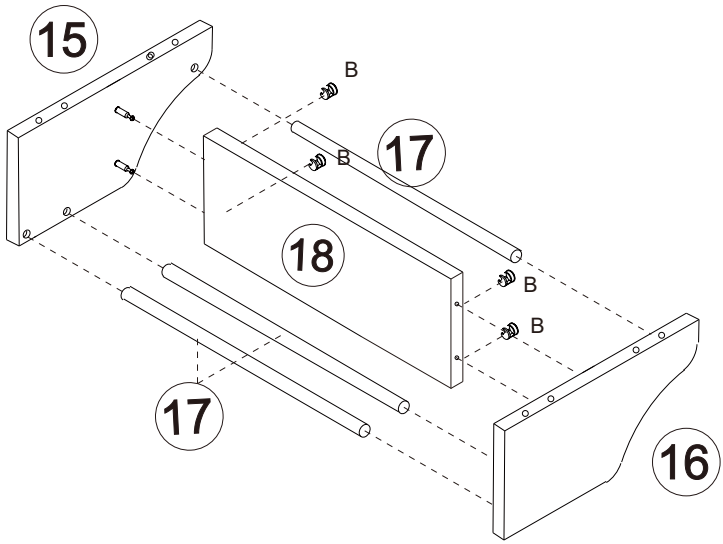

24

C x 4

F x 4

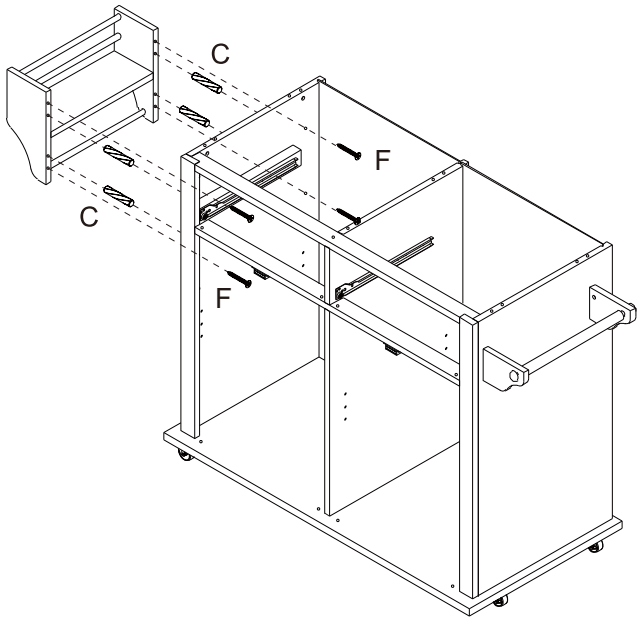

25

A x 6

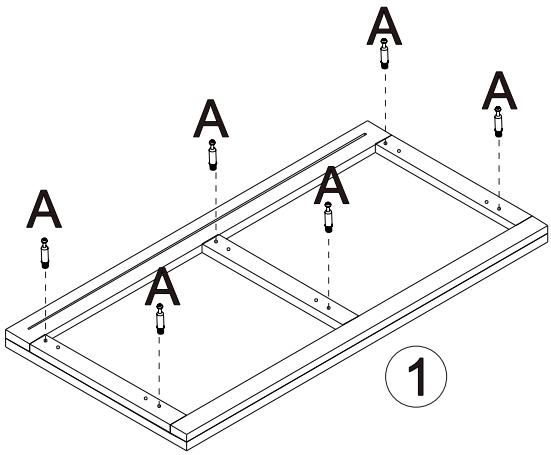

26

C x 6

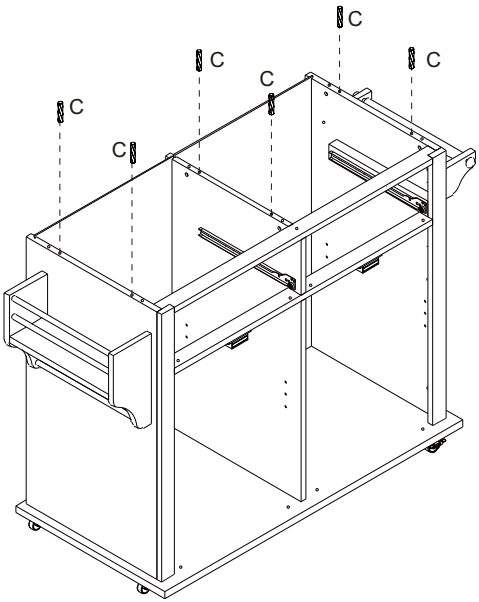

27

B x 6

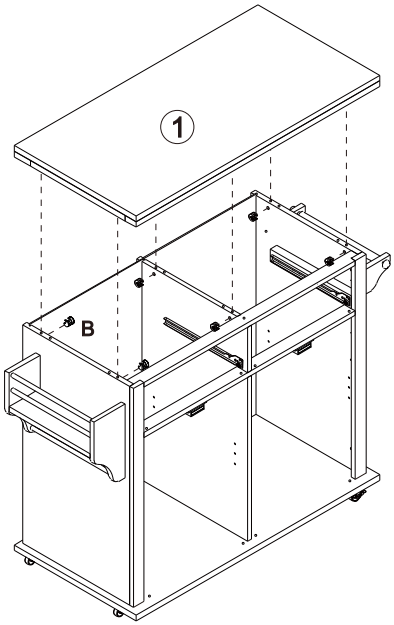

28

F x 8

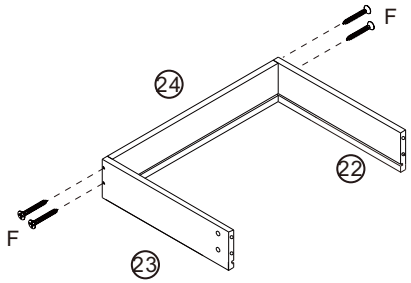

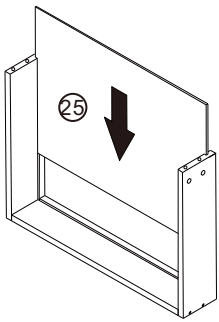

x2

29

	A x 8
	B x 8
	R x 2
	S x 2

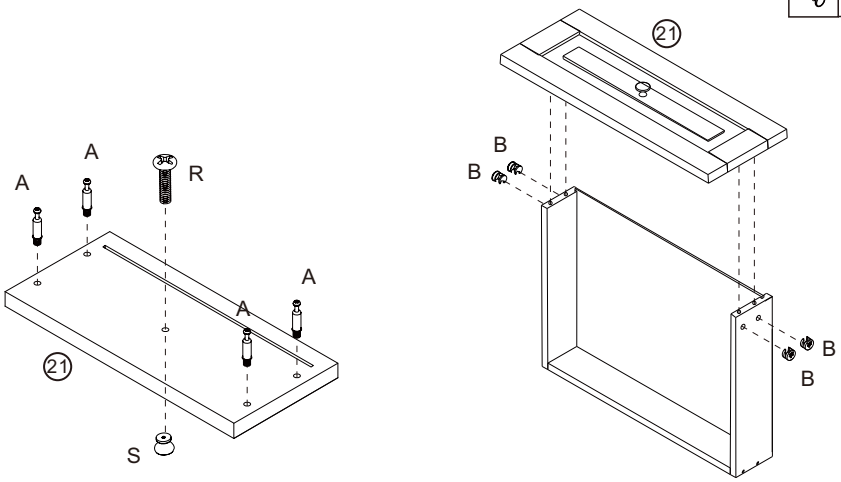

x2

30

	DL x 2
	DR x 2
	E x 8

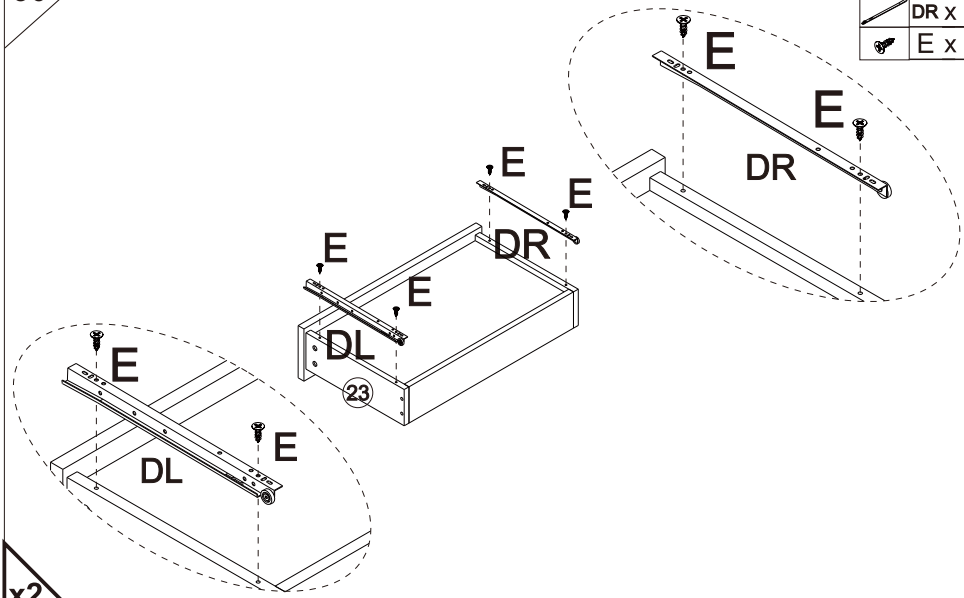

x2

31

Q x 8

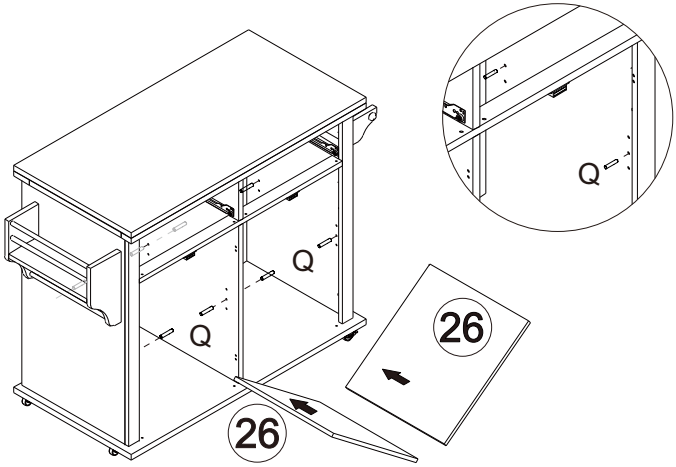

32

E x 4
J x 4
K x 8

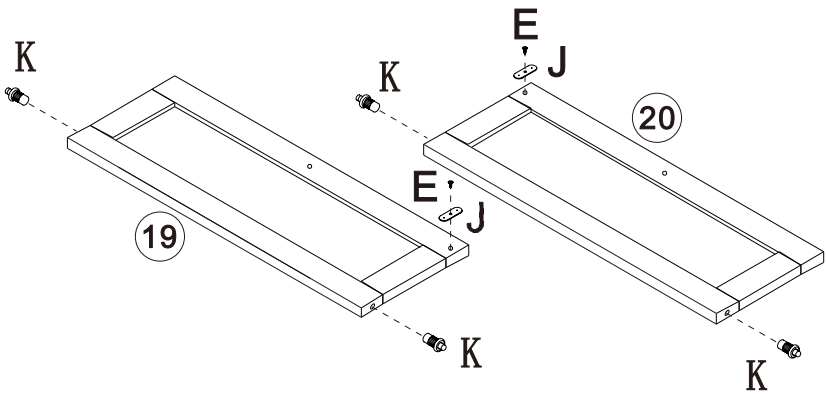

x2

33

S x 2
I x 2

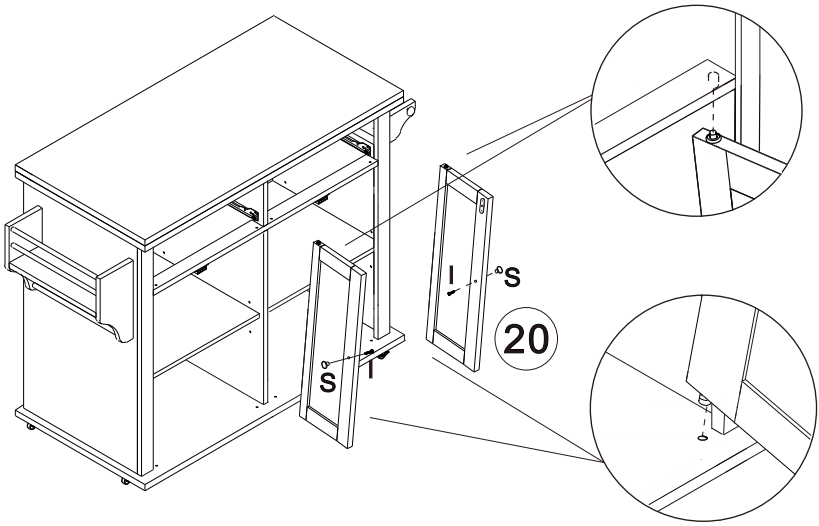

34

S x 2
I x 2

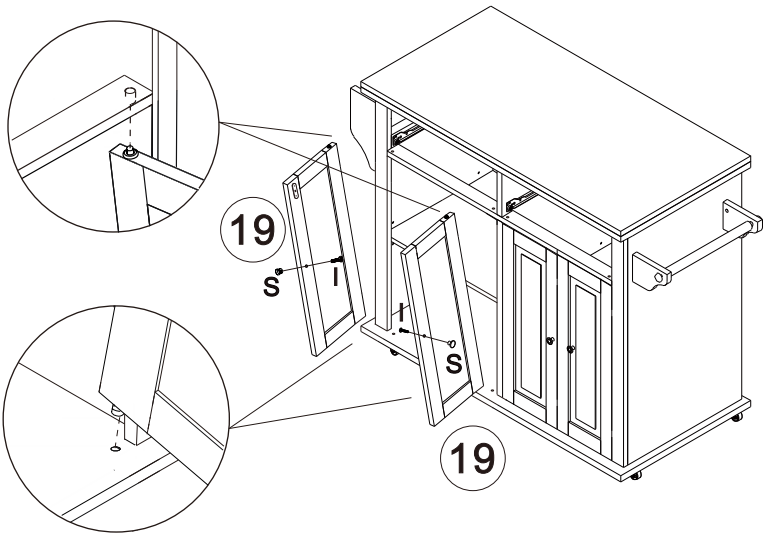

35

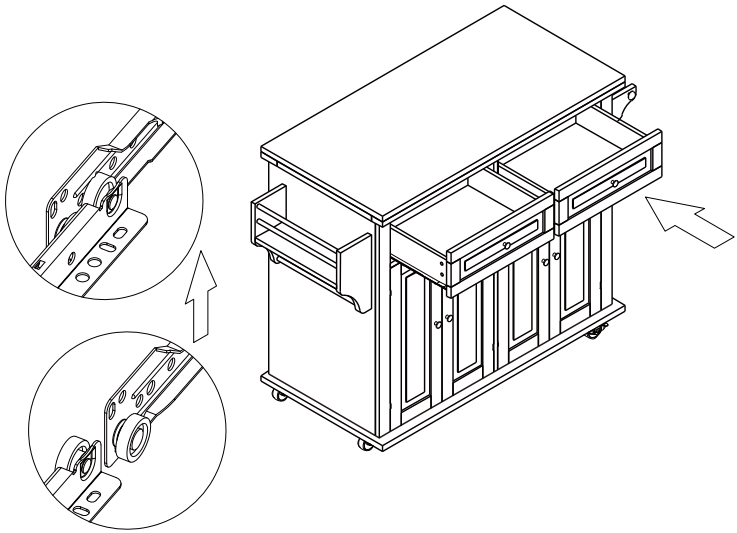

36

S | P x4

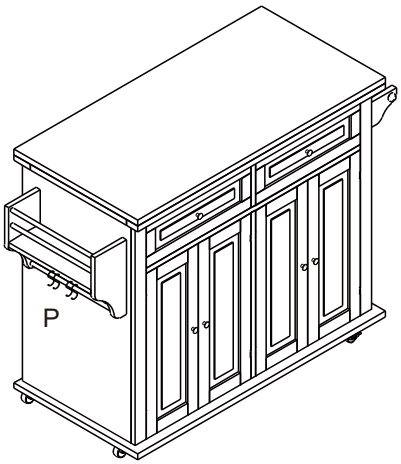

37

N x16

