ICE MAKER

Instruction Manual

SKU:IM013-NSI-USZX
MODEL:IM-15S

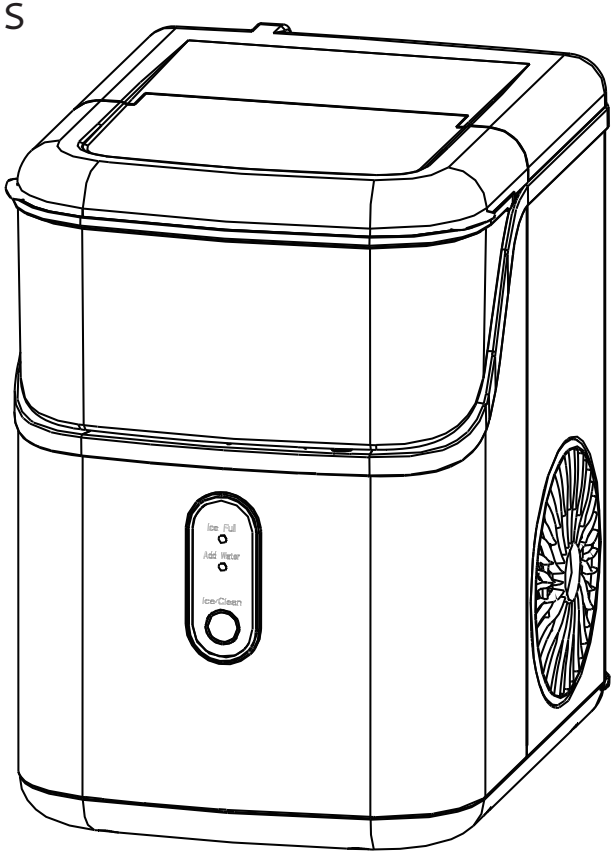

Congratulations

Dear Customer:

Welcome to family. Thank you for purchasing one of our products.

Our goal is to provide you with superior service. If there is anything missing from or wrong with your order, or if you have any questions about using our ice maker, PLEASE contact us.

Email: support@homyd.com

Team is available 24/7 to address your questions, comments, and concerns.
Your satisfaction is our ultimate goal. We want to make everything right so you'll share your positive experience with other shoppers.

If you experience any problems, please send an email to support@homyd.com.

Our mission:
* To be the most trusted appliance brand.
* To create practical, compact appliances that better your life.

If you can not identify / remedy the problem,
please email at **support@homyd.com**

Q&A

1.How often do I need to clean my ice maker?

Depending on how frequently you use it, it is recommended that you clean it at least once a week. Failure to clean the machine will cause scale accumulation, which will eventually block the pump and cause the product to stop working properly.

2.How should I clean the machine?

It is recommended to use lemon water or weak acid vinegar for cleaning. Drain immediately after cleaning, and then clean it with pure water.
It is recommended to drain the water at least once every three days (pulling out the small hose on the right side of the water tank). Draining will not only ensure that the hardness of the water is not too high, but also ensure that impurities can be discharged well, and it is not easy to produce scale in the water tank.
We do not recommend washing vour ice baskets and scoops in the dishwasher as that may damage them.

3.Why is my ice cube cloudy?

It means that the water quality is turbid. It is recommended to use drinking water and distilled water. If your water quality problem is serious, it is recommended that you install a water filter kit.

4.Can I put milk and juice into the water tank to make ice cubes?

We recommend that you do not do that. Our research has found that the high concentration of milk and beverages can easily block the pump and reduce the life span of the pump. At the same time, the protein in milk is prone to calcification, which chemically reacts with the PU water pipe inside the machine, which easily breaks it, making the product unable to continue working.

5.Why does my ice cube melt easily?

Since the ice maker is not a refrigerator, it does not have a heat preservation function. The high ambient temperature in summer will accelerate the melting of ice cubes. You can close the lid of the machine to keep the internal temperature. Some customers also put electric fans on the side of the machine to blow away the hot air surrounding the device, thus solving the problem. Feel free to try it yourself. However, if you are not using ice cubes for a long time, we recommend removing them from the ice basket and storing them in the refrigerator.

6.Why is my ice so thick and difficult to fall from the ice tray? What should I do?

It may be that your ice making time is set for too long, or it may be that the temperature of your environment is very low. You can reduce the time to 0 or -6 by pressing the minus key on the touch panel.

7.Why does the ice cubes have a plastic smell?

The ice cube itself has no taste. If you feel there is a plastic smell, try to clean the inside of the machine with lemon water, then run a few cycles, and finally rinse with distilled water.

8.Why is there noise in the operation of my machine?

There is a faint sound when the machine is running. Closing the lid can reduce the noise. If the water pump makes a noise during use, it is recommended to turn off the machine first, and then turn on the machine after cleaning the filter in the water tank to observe whether or not the noise disappears.

9.Why is water leaking from my machine?

It may be that the PUA tube inside the machine fell off during transportation. You can remove the back cover of the machine and connect it by yourself. If you don't know how to operate, please contact team. We will give you a professional video to help you solve the problem.

10.Why is there water flowing but not making ice?

Please provide a video or picture and send it to us. Team will assist you.

Contents

SAFETY INSTRUCTIONS	02
PREPARING YOUR ICE MAKER FOR USE	03-04
GETTING TO KNOW YOUR UNIT	05
OPERATING PROCEDURES & MAINTENANCE	06
USING YOUR ICE MAKER	07-12
TROUBLESHOOTING	13
TECHNICAL PARAMETERS & CIRCUIT DIAGRAM	15

SAFETY INSTRUCTIONS

Your safety, as well as the safety of others, is of utmost importance to us.

- We have incorporated many important safety messages in the manual of your appliance.
- Always read and follow all the safety instructions.
- Below is the safety alert symbol.

- AII Safety messages will follow the safety alert symbol and the word " DANGER" or "WARNING " .

These words mean:

Death or severe injury will occur if you don't follow the instructions properly.

All safety messages provide information on potential hazards, way to reduce the risk of injury, and consequences of not following the instructions.

PREPARING YOUR ICE MAKER FOR USE

SAFETY TIPS

When using electric appliances, it's vital to follow basic safety steps to lower the risk of fires, electric shocks, or harm to people and property. Make sure to read all the instructions before you start using any appliance.

- Do not use this product or any other appliance if the cord is damaged.
- If the power cord's is damaged, replace it with a new one from the manufacturer, their service agent, or an expert to avoid potential risk.
- Make sure you place this ice-maker in a location where the plug is easily accessible. It is important to only connect it to properly grounded outlets, and avoid plugging anything else into the same outlet.
- Double-check that the plug fully inserted into the socket. Ensure that the power cord is not running over carpeting or other heat insulators.
- Do not cover the cord. Keep the cord out of traffic areas, and away from water.
- It is not recommended to use an extension cord as it can cause overheating and potentially lead to a fire. However, if it is absolutely necessary to use one, make sure it's rated at least 14AWG and can handle a minimum of 1875 watts.
- Remember to unplug the ice maker before performing any cleaning, repairs or service.
- Be cautious and vigilant when children are present near this appliance.
- Don't use your ice maker outside. Set it up in a location that is away from direct sunlight and make sure there is a gap of at least a 6-inch between the back of your unit and the wall. Also, keep a minimum distance of 6 inches free on each side of your unit to ensure proper ventilation.
- Do not use any other liquid. Only use water to make the ice-cube.
- Do not use flammable fluids to clean your ice maker as the fumes may cause a fire or explosion.
- Please make sure to keep the ice maker steady and avoid causing it to fall over.
- If the ice maker is brought in from outside in wintertime, give it a few hours to warm up to room temperature before plugging it in.

PREPARING YOUR ICE MAKER FOR USE

WARNING: This appliance must be grounded.

DANGER: Risk Of Fire or Explosion.

Flammable Refrigerant Used.

Do Not Use Mechanical Devices To Defrost Ice Maker.

Do Not Puncture Refrigerant Tubing.

To Be Repaired Only By Trained Service Personnel.

CAUTION: Consult Repair Manual/Owner's Guide Before Attempting To Install or Service This Product

All Safety Precautions Must be Followed.

Dispose Of Property In Accordance With Federal Or Local Regulations. Flammable Refrigerant Used .

Follow Handling Instructions Carefully. Flammable Refrigerant Used.

The ice maker must be installed in accordance with the safety standard of Refrigeration Systems, ASHRAE15. Do not install the ice maker in public building corridors or hallways .

If the unit is malfunctioning and requires maintenance, it should be serviced by factory authorized personnel. Replacement of any components should be done with similar parts to minimize the risk of ignition caused by incorrect parts or improper service.

Attention:

The wires in this power cord are colored based on the following code:

Green or Green with a strip yellow:	Grounding
White:	Neutral
Black:	Live

To avoid a hazard due to instability of the appliance, it must be placed at a even or flat surface.

GETTING TO KNOW YOUR UNIT

1. Float Switch;

2. Secondary Water Reservoir (It connects directly with the evaporator);

3. Water Reservoir;

4. Maximum Water Level;

5. Filter;

6. Control Panel:
   A.Ice making and cleaning buttons;
   B.Ring indicator light;
   C.Water lack indicator light;
   D.Ice full indicator light;

7. Top Cover,(removable from the top)

8. Hot Air Outlet;

9. Ice Basket;

10. Water Drain Cap (at the front bottom side of the unit);

11. Ice Scoop;

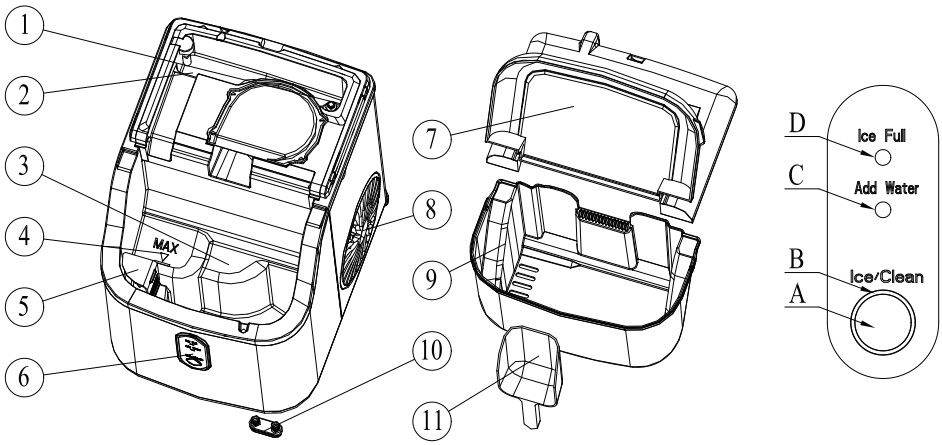

OPERATING PROCEDURES & MAINTENANCE

1. Remove both the exterior and interior packaging, and then check to ensure that all the accessories are included. If any of the parts are missing, please contact our customer service for assistance.

2. Remove all the tapes from the unit and take out the accessory parts inside.

3. Clean the interior with lukewarm water and a soft cloth.

4. Place your ice maker on a level counter or table, away from direct sunlight and other sources of heat (i.e., stove, furnace, and radiator). Make sure that at least 6 inches are between the back and sides of your ice maker and the wall.

5. Allow one hour for the refrigerant fluid to settle before plugging your ice maker in.

6. Ensure that the power plug is easily accessible.

WARNING: Fill with potable water only. Only use drinking water.

DANGER

***Improper use of the grounded plug can result in electrical shock. If the power cord is damaged, please contact our customer service.**

1. To ensure your safety, it's important to ground this unit properly. The power cord comes with a grounding plug that fits standard grounding wall outlets, which helps reduce the risk of electric shock.

2. Always plug your appliance into dedicated, well-installed grounding wall outlet. Do not damage the plug's grounding means under any circumstances. If you have any questions concerning power and grounding, seeking advice from a certified electrician.

3.This appliance requires a standard 110-120Volt, 60Hz electrical outlet with proper grounding means.

USING YOUR ICE MAKER

Before using your ice maker, it is strongly recommended to clean it thoroughly.
Unplug the unit before cleaning or making any maintenance.

1.Take out the ice basket.

2.Clean the interior with diluted detergent, warm water, and a soft cloth.

3.Rinse the inside parts with water and drain out the water by unplugging the drain cap located on the bottom front side.

4.Use a mild detergent solution and warm water to clean the exterior of the ice maker regularly.

5.Dry the interior and exterior with a clean, soft cloth.

6.If the machine is not going to be used for a long time, drain the water entirely & dry the interior.

How to start the unit

1.Remove the top back cover and the power cord. Then, back the top cover.

2.Take out the ice basket and pour potable water in to the water reservoir. Ensure that you don't exceed 0.3-gallon water.

3.Put the ice basket back in place.

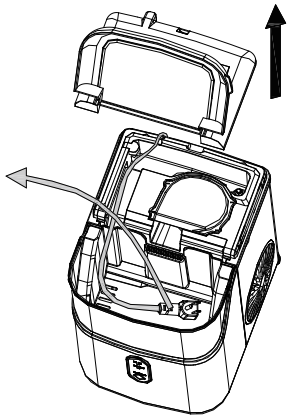

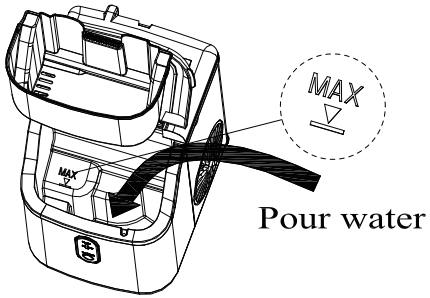

4.Plug in the unit. The ring indicator will turn red. To start making ice, press the "ice /clean" button.
If you want to do automatic cleaning, press the "Ice/Clean" button.

USING YOUR ICE MAKER

CLEAN

We recommend running the initial cleaning,procedure before using the appliance for the first time or if the device has not been cleaned in a long time. Here are the steps to follow:

1.Before cleaning, make sure to insert the water drain cap into the appliance to ensure it works properly

2.Press and hold the "ICE/CLEAN" button for 5 seconds. The cleaning procedure will be activated when the Ring indicator light flashes white. After running for 15 minutes, the process will automatically exit To interrupt the process, simply press the "ICE/CLEAN" button again ,and it will exit immediately.

3.After the cleaning procedure, remove the top cover and ice basket Rinse the main water reservoir and the secondary water reservoir. Then, move the appliance to the edge of the desktop and ensure it is placed steadily.

4.Place a water container under the appliance and remove the drain cap from the bottom to collect dirty water. When the process is done, reinsert the drain cap..

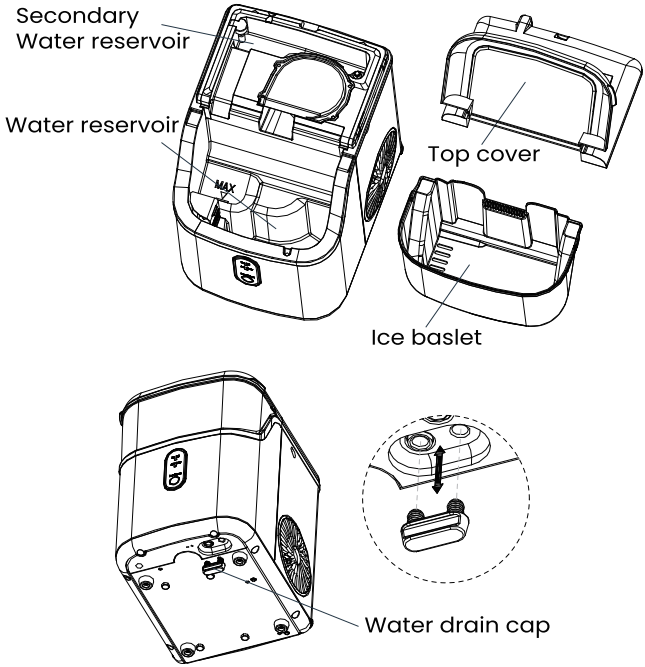

USING YOUR ICE MAKER

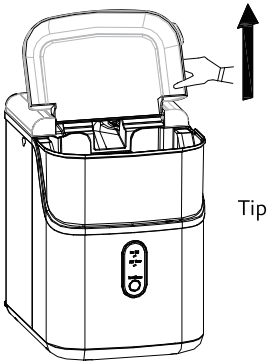

Tips: remove the top back cover by pulling up the front clear cover gently.

Change the water in the reservoir every 24 hours to ensure a reasonable hygiene level. If the unit is not in use, drain and dry the water reservoir.

System Cleaning/Sanitizing Procedure

1. Unplug the ice maker.

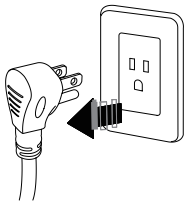

2. Take off the bottom drain cap and drain out the water to a sink.

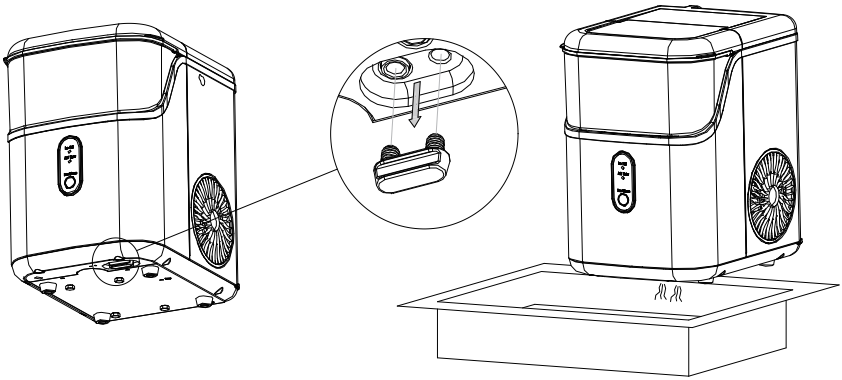

3. For daily cleaning, dilute one teaspoon of household bleach in five cups of water.

4.For monthly cleaning of removing mineral deposits, use the white vinegar instead of the water solution mentioned above(and then plug in to turn on the “cleaning function” for about 5 minutes. After that, unplug it again to leave the white vinegar in the unit for at least 12hours).

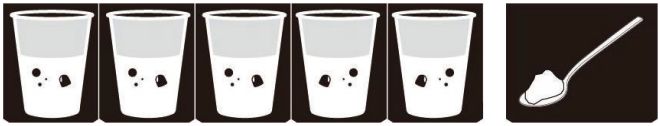

5. Pour the solution into the water reservoir up to the “MAX” water level.

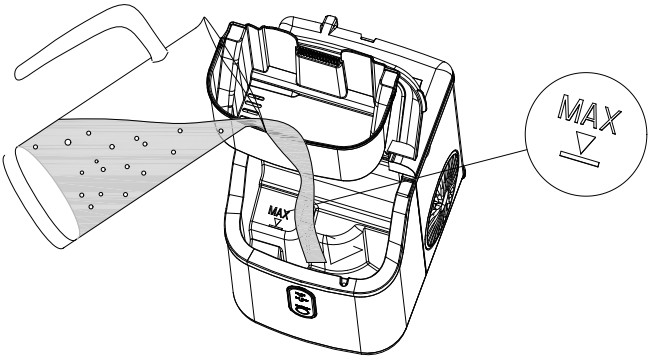

6. Plug in the ice maker, press and hold the "Ice/Clean" button for 5 seconds to initiate the cleaning process(15mins)

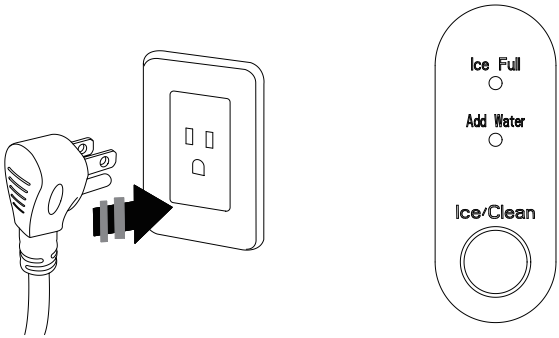

7.When the "Ice/Clean" indicator turns off, remove the drain cap and drain the water into a sink.

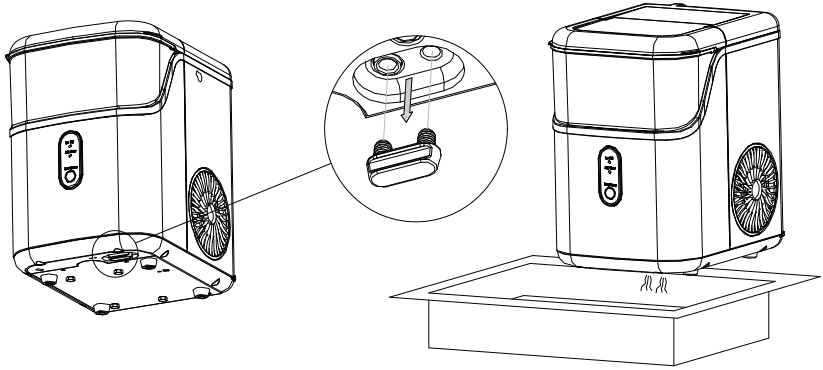

8. Repeat steps 4 to 6 with fresh water for two more cycles to rinse the inside.

9. Replace the drain cap on the bottom.

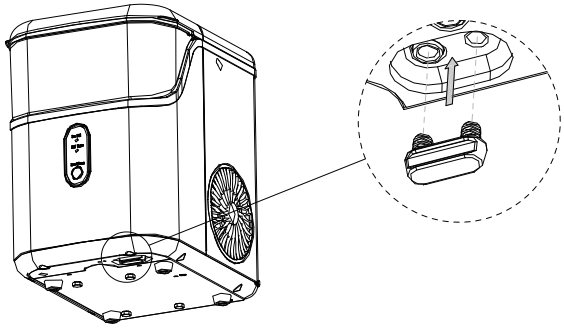

9. After completing the cleaning process, fill the reservoir with fresh water and press the "Ice/Clean" button to start making ice cubes.

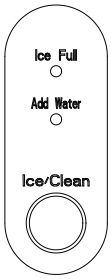

USING YOUR ICE MAKER

How to obtain the ice cube

1. Before making ice, make sure to insert the water drain cap into the appliance to ensure it works properly

2. Press and hold the “ICE/CLEAN” button for 5 seconds. The ice making procedure will be activated when the Ring indicator light flashes white. To interrupt the process, simply press the “ICE/CLEAN” button again ,and it will stop immediately.

3. We recommend running the initial cleaning procedure before using the appliance for the first time or if the device has not been cleaned in a long time.

4. If the "Add water" light is on and the ice machine stops working, add water and restart it. Otherwise, it will take a long time to start automatically. After restarting, the compressor will have a 3-minute waiting time before making ice again.

5. When the ice bin is full, the machine stops and the "ice full" light turns on. It resumes automatically once the ice is removed.

ice scoop position

Put the scoop on the top back cover

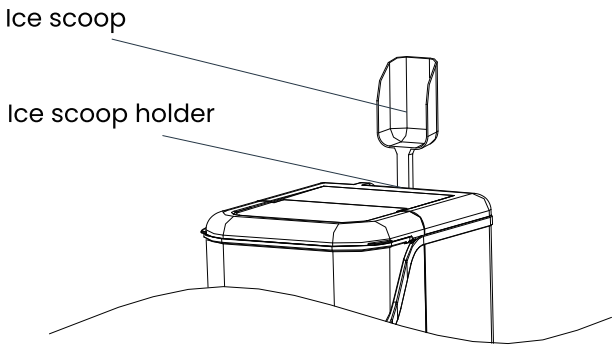

TROUBLESHOOTING

Problem	Possible Cause	Solution
"Add Water" indicator turns on	Lack of Water.	Stop the ice maker, fill water, and press "ICE/CLEAN" button again to restart the unit.
"ICE FULL" indicator turns on	The amount of ice is excessive	Time to grab some ice cubes out.
	No ice cube inside.	Remove any obstacles inside or clean the inside wall of the ice storage bin.
Ring indicator light flashes red	Ambient temperature or water temperature in inner tank is too high.	Run the ice maker below 90 Fahrenheit and use colder water.
	Refrigerant liquid leakage.	Press the ICE button twice, restart the ice-making program. If the problem persists, get a qualified technician or contact us.
	Cover motor is broken	
	Pipe in the cooling system is blocked.	
Making Ice too slowly	Hot Air outlet has been blocked by something.	Make sure the ventilation distance for the hot air outlet.
	Water temperature in inner tank is too high.	The water needs to be within the temperature range of 7℃ to 32℃.
	Refrigeration system malfunctions.	Verify by a qualified technician or contact us.
Water leakage	Drain plug not in place.	Put the drain plug in place.
	Pipe Joint in the appliance may Loose	Verify by a qualified technician or contact with us.
	The seal has reached service life	Verify by a qualified technician or contact with us.

TECHNICAL PARAMETERS & CIRCUIT DIAGRAM

TECHNICAL PARAMETERS

Model	IM-15S
Protection Type	I
Power	115V/60Hz
Ice Making Current	2.7A
Refrigerant	R600a.0.57Oz / 16g
Vesicant	C5H10
Dimension	287x220x322mm

CIRCUIT DIAGRAM

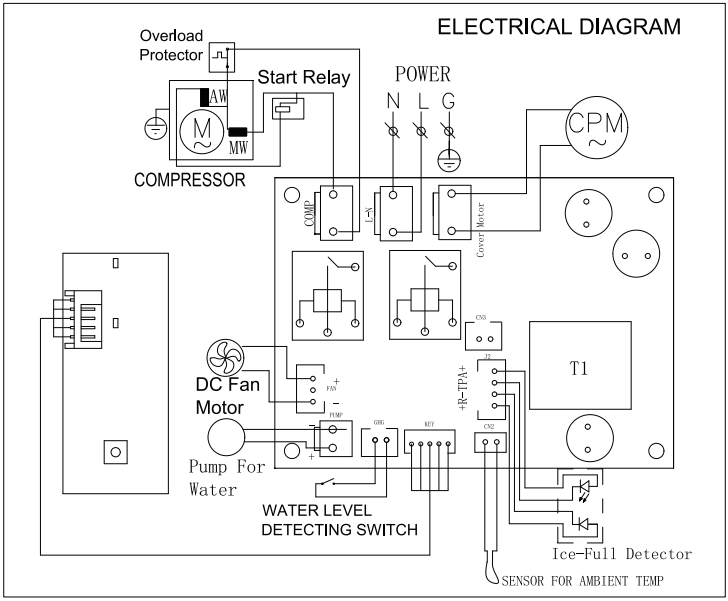

ICE MAKER

Instruction Manual
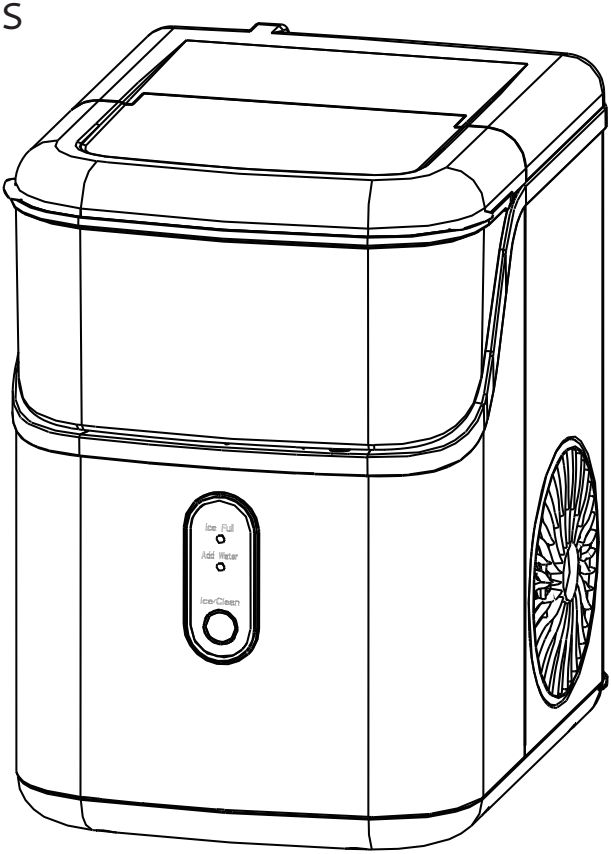
SKU:IM013-NSI-USZX
MODEL:IM-15S