waykar

USER MANUAL

Home Dehumidifier

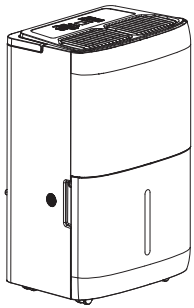

This shared manual is applicable to:

- CTH80D
- CTH120D
- CTH150D
- CTH150PD with Pump

Please read the manual carefully before operating the device.

Message from WAYKAR

Thank you for choosing Waykar. Established with a commitment to protecting indoor climates, Waykar has grown into a leading brand in the HVAC industry, known for premium products that prioritize comfort and health in your indoor space.

Before you start exploring this product, read this manual carefully for necessary instructions first. It's advised to keep it for future reference.

24/7 Full-Time Response

Upon receipt of the dehumidifier, kindly inspect the package contents immediately for any potential missing or damaged parts. In case of issues, we would appreciate your prompt contact with Waykar support for solutions before initiating a return. Send us an email or scan the QR code to start a live chat.

support@waykar.com

Important: Please Read Before Usage

Ensure the dehumidifier is always kept in an upright position to avoid internal damage. After unwrapping the dehumidifier, please set it upright and let it sit for **24 HOURS** before plugging it in.

We may not be superheroes for life—but we can be your HERO for this dehumidifier. Just reach out anytime.

Not collecting water? Missing parts?
Need setup help or missed the return window?
No worries – we've got your back!
Waykar Customer Support – Available 24/7
support@waykar.com (213)-895-4871

100% Covered for Defects

2 YEARS WARRANTY

Note: The product diagrams in this manual are for illustration purposes only. The actual products may vary slightly in shape and appearance.

Table of Contents

PARTS ILLUSTRATION.....01

PACKAGE CONTENTS.....02

INSTALLATION GUIDE.....02

FUNCTION OVERVIEW.....03

OPERATION INSTRUCTIONS.....06

WATER DRAINAGE 09

TROUBLESHOOTING.....11

MAINTENANCE & CLEANING.....12

GENERAL SAFETY PRECAUTIONS.....13

SPECIFICATIONS.....24

WARRANTY & CONTACT.....25

PARTS ILLUSTRATION

Applicable to CTH80D, CTH120D, and CTH150D

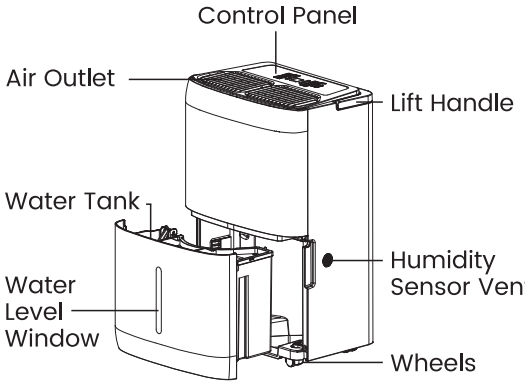

(Front Side)

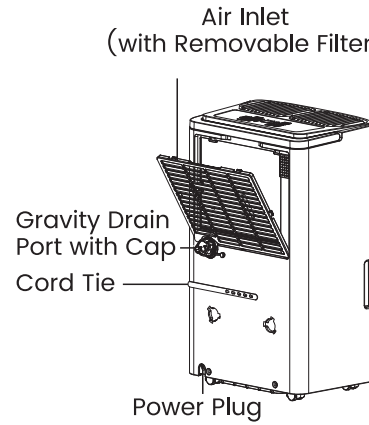

(Back Side)

Applicable to CTH150PD

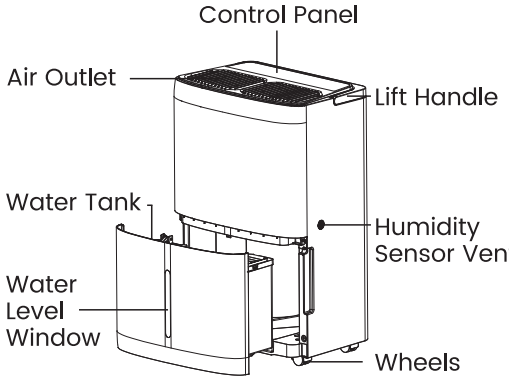

(Front Side)

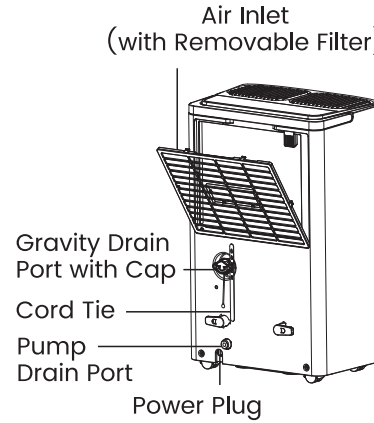

(Back Side)

Note: These graphic drawings are for demonstration purposes only. The actual product may vary slightly in size and shape.

PACKAGE CONTENTS

The packages of CTH80D, CTH120D, and CTH150D contain:

1 × Dehumidifier
1 × Drain Hose
2 × Cord Hanger Brackets

The package of CTH150PD contains:

1 × Dehumidifier
1 × Drain Hose
2 × Cord Hanger Brackets
1 × Pump Drain Hose with Connector (5 m/16.4 ft)

Attention:
Please be aware that certain accessories, such as the power plug and cord hanger brackets, are placed inside the water tank when shipped.

INSTALLATION GUIDE

Positioning the Dehumidifier

1. The operational temperature range for the dehumidifier must be maintained between 41°F to 90°F (5–32°C). Operation outside of this specified temperature range may lead to potential damage to the product. Therefore, please do not place the device in an area where temperatures fall outside of this range.

2. When positioning the dehumidifier, please ensure it is not placed too close to walls or other objects, as this could obstruct the air vents. Maintain a min. distance of 18 inches above and around the device, as depicted in the diagram.

3. The device should be positioned, operated, and stored in an area with a minimum space of 54 sq. ft.

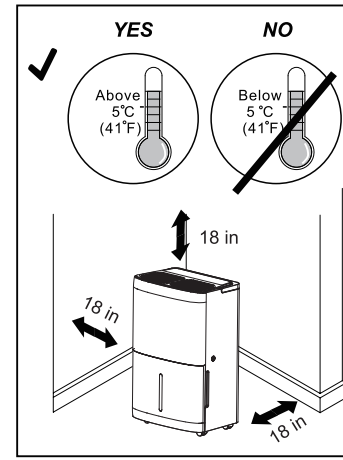

Control Panel Illustration

Applicable to CTH80D and CTH120D

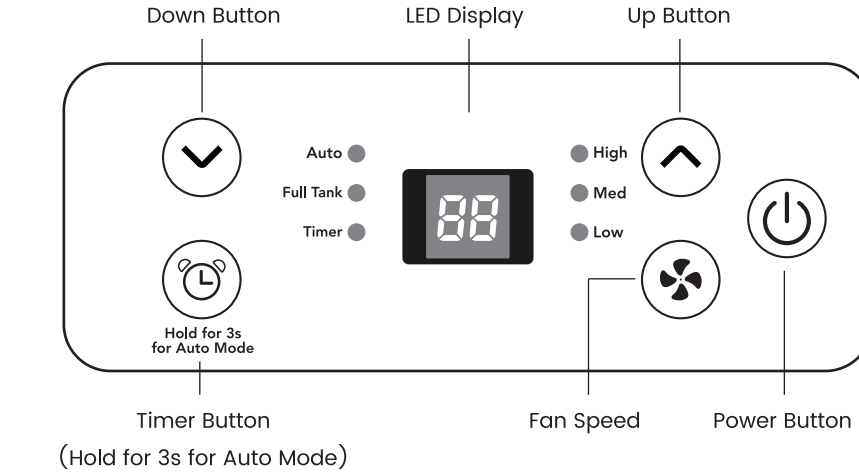

Applicable to CTH150D (without Pump) and CTH150PD

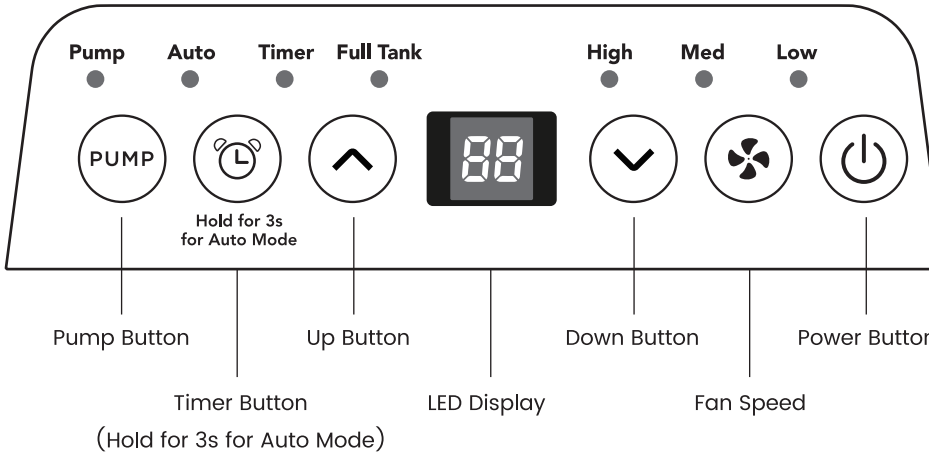

Note: This illustration depicts only the control panel of the CTH150PD model accurately. The CTH150D model does not include the Pump button and Pump indicator.

FUNCTION OVERVIEW

Indicator Explanation

The table below illustrates the meanings of the indicators when they are illuminated on the display.

Indicator	Meaning	Indicator	Meaning
Auto ●	Auto Mode activated.	High ●	The fan is set to high speed.
Full Tank (Flicker) ●	The water tank is full or the tank isn't positioned into place.	Med ●	The fan is set to medium speed.
Timer ●	A timer has been set for the device.	Low ●	The fan is set to low speed.
Pump ●	Pump drain has been activated (ONLY applicable to CTH150PD)		

Features

Auto Defrosting

The dehumidifier automatically detects and addresses frost build-up on its coils to optimize energy efficiency and enhance operation in low temperatures. During defrosting, the compressor will stop running, but the fan continues to operate. The dehumidifier automatically resumes normal operation once the defrosting process is completed.

Power-off Memory Restart

In the event of an unexpected power failure or accidental unplugging, the dehumidifier offers automatic restart, seamlessly resuming operation with your previously saved settings once power is restored.

Full Tank Reminder

While it's easy to check the water level inside the tank with a glance at the Water Level Indicator, the dehumidifier features full tank alarm and automatic shut down at a full tank to prevent water overflow.

When the water level inside the tank reached the maximum level, the "Full Tank" indicator will flicker in red color to signal a full tank. Then, the compressor will automatically shut off, followed by the pause of the fan. After 3 minutes, the beeping alarm will sound.

The dehumidifier cannot be turned back on until the water tank is emptied and put back into place.

Auto Mode

The featured Auto Mode provides smart and automatic control over space humidity. In Auto Mode, the dehumidifier will automatically detect room temperature and adjust its humidity setting accordingly.

Space Temperature	Auto Humidity Setting
Below 18°C/64°F	55% RH
18–25°C/64–77°F	50% RH
Above 25°C/77°F	45% RH

Press and hold the [⏲] button for 3 seconds to enter the Auto Mode and the "Auto" indicator will light up.

When the Auto Mode is activated,

1. the [⌃] and [⌄] buttons remain unresponsive for humidity setting while the display shows the real-time space humidity level.
2. the fan is set to low speed by default and cannot be adjusted. (Please note that pressing the [✲] button will exit the Auto Mode)
3. the display will dim immediately upon detecting no activity on the control panel, and it will automatically turn off after one minute. Short press any button to activate the screen.
4. In Auto Mode, when the tank is full, the compressor stops and the fan continues running for about 3 minutes. The Full Tank indicator flashes only when any button is pressed to wake the display.

To exit the Auto Mode, simply press [✲] or press and hold the [⏲] button for 3 seconds.

OPERATION INSTRUCTIONS

Power On/Off & Standby Mode

When plugged in, the dehumidifier enters standby mode with the "--" symbol on the display.

Press the [⏻] button to turn the dehumidifier on or off. For powering off, a 20-second countdown will appear on the display before the dehumidifier turns off.

When the dehumidifier is running, the display will dim to save power if there's no activity on the control panel for more than 3 minutes (except in Auto Mode, where it mandates immediate dimming and screen-off after one minute).

3-Minute Delay Compressor Protection

In the event of frequent power cycling, the 3-minute delay protection mechanism will be triggered to enforce a 3-minute delay before restarting the compressor.

During this delay, only the fan will operate, noticeable by the cool air from the air outlet. Once the compressor kicks in, warm air will be expelled from the air outlet.

Note: The 20-second countdown appears only after the compressor has started. If powered off before compressor activation (within 3 minutes), the unit shuts down immediately.

Humidity Setting

Once turned on, the dehumidifier will automatically detect and display the space humidity on the screen. Press [⌃] or [⌄] to set your target humidity, ranging from 30% RH(displayed as "CO") to 80% RH in 5% RH increments. You can long press the buttons for continuous adjustment.

When the target humidity is set to 30% RH, the symbol "CO" appears on the screen to indicate that the dehumidifier will continuously run in order to meet the target humidity level.

Note: The dehumidifier pauses when room humidity drops 5% RH below the set target and resumes when it rises 5% RH above the target.

In Auto Mode, the target humidity level cannot be set manually. The system automatically adjusts the target based on the ambient temperature.

Fan Speed Adjustment

Press the [] button to switch between Low, Med, and High speeds to adjust your preferred airflow speed. The corresponding indicators will illuminate when a speed level is selected.

Note: The Auto Mode does not allow for fan speed adjustment.

Timer Setting

Use the timer setting to schedule the dehumidifier to automatically turn on or off. Please note: The 24-hour timer is for one-time operation only and cannot be set to repeat. Additionally, please be aware that any timer settings will be cleared if the power is interrupted or if the unit is turned off and then back on again.

Programmed Shut-down:

1. Press [] to access the timer setting. The "Timer" indicator will begin to flicker with the timer length displayed as "00".
2. Adjust the timer duration from 1 to 24 hours using the [] or [] buttons, with increments of 0.5 hours initially and then 1 hour after 10.
3. After selecting the timer length, wait until it auto-exits, indicated by flashing three times. The Timer indicator will remain illuminated.
4. To cancel the timer, press [] button and the indicator will turn off.

Programmed Start-up:

1. In standby mode, the [] button is still functional to set an auto-on timer for the dehumidifier.
2. Press[] and select a duration using the [] or [] button. The Timer indicator will remain lit once a timer is successfully set.
3. The auto-on timer will restore the previous humidity setting from before the last power-off.

Error Code Explanation

Error	Meaning	Possible Cause	Recommended Action
EH	Humidity sensor failure	Damaged humidity sensor or loose connection	Contact the manufacturer for solutions.
E2	Temperature sensor failure	Damaged temperature sensor	Contact the manufacturer for solutions.
E3	Frequent auto power-on/off, flickering display, or abnormal noise	Abnormal voltage	Try a different power outlet. If the issue persists, consult an electrician.
		Household wiring issue	Have an electrician inspect the home's wiring and power supply.
	No water condensation after 24 hours of continuous operation	Voltage fluctuations or internal component issue	Ensure a stable power source. If noise persists, contact a technician.
		Possible refrigerant leak	Contact the manufacturer or a professional technician for inspection and repair.
E5	Pump failure	Drain hose not attached before activating the pump	Ensure the drain hose is properly connected before starting the pump.
		Using drain hoses other than the one provided	Use the provided original drain hose.
		Loosened drain plug	Tighten the drain plug for gravity drain.
		Missing rubber washer	Put the washer back in place.
		Poor connection between drain hose and drain cover	Ensure a tight fit between the drain hose and cover.

Note: The "E5" error applies only to CTH150PD as it involves pump.

User-friendly Cord Hangers

How to Attach the Cord Hangers

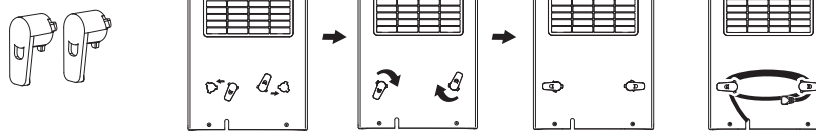

Take out the two cord hanger brackets.	Align the hanger brackets with the mounts and insert them into the mounts. Then, rotate them approxi-mately 45 degrees until they are securely tightened.	Wrap the power cable around the hangers neatly.

WATER DRAINAGE

Water Tank Drain

A water tank is included for efficient water collection, significantly enhancing the dehumidifier's mobility.

Water tank volumes:

A 4.6 L/1.2 Gal water tank is included for the CTH80D and CTH120D models, and a 7.1 L/1.9 Gal tank for CTH150D and CTH150PD.

It's recommended to empty and clean the water tank before turning on the dehumidifier each time.

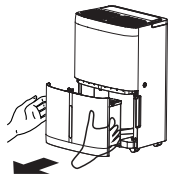	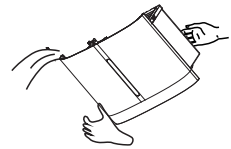	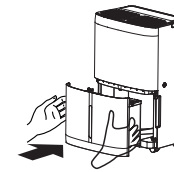
Use both hands to grasp the tank by its connection points and slide it outward.	Lift the tank handle and take it to a sink and pour water out.	Put down the handle and place the water tank back into its compartment.

Gravity Drain

In addition to collecting water in the tank, you can also connect the dehumidifier's drain port to a drain hose for continuous water outflow via (1) the included 3.3-ft long drain hose (∅12.77 mm in diameter), or (2) a standard garden hose (NOT Included).

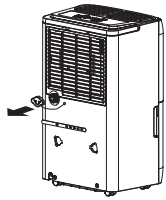	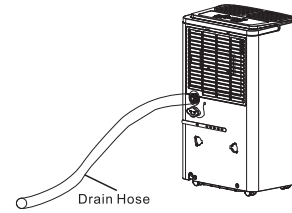
Locate the drain port on the back of the device, and rotate the drain plug counterclockwise to remove.	Connect the provided hose to the drain port and direct the other end of the hose to a floor drain or container.

The drain port features a standard 1-1/16" garden hose thread (GHT), allowing a garden hose to be connected directly.

WATER DRAINAGE

Note:

1. If no hose is connected for continuous gravity drainage, please make sure to tighten the drain plug to prevent water leakage.
2. The hose should run smoothly downward and remain at least 3.94 inches lower than the drain port level to prevent water leakage.
3. A twisted, crooked, or blocked drain hose could impede water flow and cause the condensate water to accumulate in the water tank.

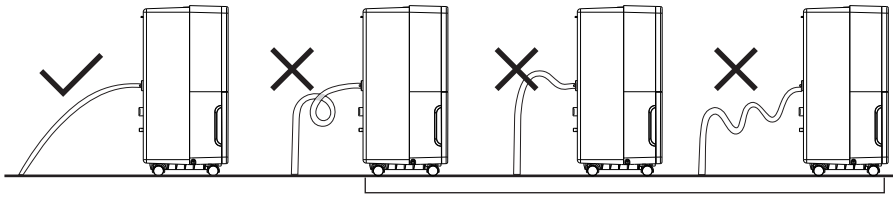

Pump Drain (Only Applicable to CTH150PD)

1. The featured pump drainage of CTH150PD makes it convenient to drain water uphill or over a long distance. A 16.4-ft long pump drain hose (∅5.5 mm in diameter) is included.

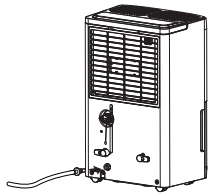

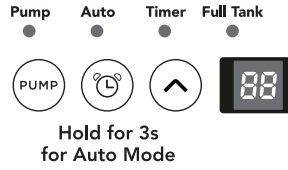

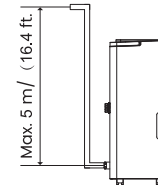

Locate the Pump Drain Port on the back of the unit. Connect the pump drain hose and its connector to the Port.	Turn on the dehumidifier and press the Pump button to activate the pump drain. The "Pump" indicator will illuminate.	Maximum vertical height for pump drainage: 5 m/16.4 ft.

Note:

1. Before activating the pump, ensure the pump drain hose is attached.
2. Once activated, the pump won't immediately start draining water. It begins when the internal reservoir reaches its maximum level and stops when it's emptied.
3. If the full tank alarm is triggered, please empty the tank before activating the pump.
4. It is recommended to regularly clean the drain port and empty the pump reservoir, particularly when the ambient temperature drops below 0°C/32°F.
5. After a power outage, the dehumidifier will automatically restart with the previously saved settings, except for the pump. Please manually adjust the pump drain as needed.

TROUBLESHOOTING

If your dehumidifier malfunctions, we recommend trying the following troubleshooting steps before contacting the manufacturer. This can help you save time and potentially resolve the issue.

The listed problems are common issues that may occur with general dehumidifiers. It's important to note that this doesn't imply that this dehumidifier is prone to defects over time.

If the problem persists after following the recommended actions, please unplug the dehumidifier and contact Waykar Customer Service as soon as possible for assistance.

Problems	Possible Causes	Solutions
Unable to run the dehumidifier	Loose power connection	Check if the device is properly plugged into a working electrical outlet.
	The water tank is full or not properly placed.	Empty the water tank and make sure it's properly positioned.
	Space temperature out of the recommended range	Make sure the air inlets/ outlets are kept clear of objects.
	Defrosting in progress	The device can only operate in temperatures between 41°F and 90°F.
	3-Minute Compressor Delay Protection	Wait about 60 minutes until the defrosting is completed.
Not effectively dehumidifying the space	Blocked air inlet or outlet	Ensure that the inlet or outlet is kept clear of any objects.
	Open doors and windows	Keep windows and doors closed for efficient moisture removal.
	The presence of a nearby heat source	Remove the heat source.
	Too large space	Consider adding an additional dehumidifier unit.
Much noise	Unstable device placement	Position the dehumidifier on a flat surface.
	Blocked filter	Clean the filter.
	Fan noise during operation	Normal phenomenon. No action required.
Water leakage	Loose hose connection	Ensure that the hoses are firmly attached.
	Tilted device	Place the dehumidifier on even ground.
	Blocked drain port	Clean the port and ensure the drain hose is clear and smooth.

MAINTENANCE & CLEANING

Note: Please remember to unplug the dehumidifier first before servicing or cleaning the unit.

Exterior Cleaning

Use a soft, damp cloth to wipe clean the dust buildup on the surface of the dehumidifier. Neutral detergents are acceptable for cleaning, but avoid abrasive cleaners or harsh chemicals as they may damage the finish.

Please do not spray water directly on the device as the dehumidifier isn't waterproof. Pay special attention to the air inlets and outlets to remove any dust or debris buildup that could obstruct airflow.

Filter Cleaning

The dehumidifier comes with a removable filter. Please clean the filter regularly for dust, smoke, animal dander, mold spores, and pollen to reduce airborne allergens in the air.

1. The filter is positioned in the top compartment at the back of the dehumidifier.
2. Locate the opening between the filter and the compartment, tap it, and gently pull the filter outward to remove it.
3. Brush off any dust and debris from the filter, rinse it thoroughly, and let it dry completely. Avoid drying it in direct sunlight to prevent deformation.
4. Insert the bottom tabs of the filter into the slots of the compartment, then press down on the top of the filter until its top locking tabs snap into place.

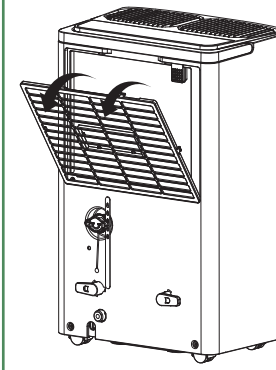

Device Storage

For extended storage, unplug the unit and allow it to cool. Empty and clean the water tank, disconnect and clean the drain hose and drain port, and wash and fully dry the filter. Cover the unit with a breathable cloth and store it in a dry, well-ventilated area away from direct sunlight.

GENERAL SAFETY PRECAUTIONS

- The dehumidifier is designed for indoor use only and is not intended for operation on public transport, such as buses, subways, and trains.
- Avoid placing the device on soft, shaky, or uneven ground, as this may cause vibration and movement during operation.
- Verify that the dehumidifier's voltage matches your electrical supply and plug it into grounded outlets in accordance with local regulations regarding electrical safety.
- Ensure the water tank is emptied before turning on the dehumidifier to prevent overflow and water spillage.
- Avoid contact with water as the dehumidifier is not waterproof.

- Ensure that the drain hose runs downward without bending or winding to facilitate continuous water drainage.
- Be sure to unplug the dehumidifier first before cleaning or packing it.
- Turn off the dehumidifier before unplugging the device.
- For damaged cords, please contact the manufacturer or certified technicians for replacement to avoid hazards.
- Do not dismantle or modify the device without professional certification. Such actions may lead to safety hazards and void the warranty.

- If the dehumidifier is not going to be used for an extended period, please remember to unplug it.
- Keep the dehumidifier away from direct sunlight, heat-generating devices, and flammable materials, including stoves, gasoline, etc.
- Avoid sitting, standing, or placing heavy objects on the device.
- No pesticides or flammable liquids are allowed near the device.
- Avoid inserting fingers, rods, or other thin objects into the air inlet and outlet grilles of the dehumidifier.
- Stop and unplug the device immediately at any sign of malfunction.

GENERAL SAFETY PRECAUTIONS

- Do not tilt the device to prevent spilled water from damaging it.
- Always empty the water tank before moving or lifting the unit.
- Children aged 8 and above, as well as individuals with reduced physical, sensory, or mental capabilities, should operate the device only under supervision. Children under 8 should not tamper with it.
- Use soft cloth for cleaning and avoid splashing water directly on it.
- Neutral detergents are recommended for cleaning the dehumidifier. Alcohol, gas, benzene, and other chemical solvents are prohibited for cleaning purposes.

WARNING
Do not use means to accelerate the defrosting process or to clean, other than those recommended by the manufacturer.
Risk of Fire—Store in a well-ventilated room without continuously operating flames or other potential ignition. Do not pierce or burn.
Be aware that refrigerants may not contain an odour.



- WARNING – Risk of Fire. Flammable Refrigerant Used. To Be Repaired Only By Trained Service Personnel. Do Not Puncture Refrigerant Tubing.
- WARNING – Risk of Fire. Dispose of Properly In Accordance With Federal Or Local Regulations. Flammable Refrigerant Used.
- WARNING – Risk of Fire. Flammable Refrigerant Used. Consult Repair Manual/Owner's Guide Before Attempting To Service This Product. All Safety Precautions Must Be Followed.
- WARNING – Risk of Fire due to Flammable Refrigerant Used. Follow Handling Instructions Carefully in Compliance with National Regulations.
- WARNING – Risk of Fire – Store in a Well-Ventilated Room Without Continuously Operating Flames or Other Potential Ignition Sources.
- WARNING – Risk of Fire – The Appliance Shall Be Installed, Operated, and Stored in a Room With a Floor Area Larger Than 5 m^2 (54 ft^2).

GENERAL SAFETY INSTRUCTIONS

Transportation, marking and storage for units that employ flammable refrigerants

1. General

The following information is provided for units that employ FLAMMABLE REFRIGERANTS.

2. Transport of equipment containing flammable refrigerants

Attention is drawn to the fact that additional transportation regulations may exist with respect to equipment containing flammable gas. The maximum number of pieces of equipment or the configuration of the equipment permitted to be transported together will be determined by the applicable transport regulations.

3. Marking of equipment using signs

Signs for similar appliances used in a work area are generally addressed by local regulations and give the minimum requirements for the provision of safety and/or health signs for a work location. All required signs are to be maintained and employers should ensure that employees receive suitable and sufficient instruction and training on the meaning of appropriate safety signs and the actions that need to be taken in connection with these signs.

The effectiveness of signs should not be diminished by too many signs being placed together. Any pictograms used should be as simple as possible and contain only essential details.

4. Disposal of equipment using flammable refrigerants

See national regulations.

5. Storage of equipment/appliances

The storage of the appliance should be in accordance with the applicable regulations or instructions,whichever is more stringent.

6. Storage of packed (unsold) equipment

Storage package protection should be constructed in such a way that mechanical damage to the equipment inside the package will not cause a leak of the REFRIGERANT CHARGE.

The maximum number of pieces of equipment permitted to be stored together will be determined by local regulations.

Requirements for operation,service and installation manuals of appliances using flammable refrigerants

Qualification of workers

The manual shall contain specific information about the required qualification of the working personnel for maintenance, service and repair operations. Every working procedure that affects safety means shall only be carried out by competent persons.

Examples for such working procedures are:

• breaking into the refrigerating circuit;

• opening of sealed components;

Competence of service personnel

1. General

Information of procedures additional to usual information for refrigerating appliance installation, repair, maintenance and decommission procedures is required when an appliance with FLAMMABLE REFRIGERANT is affected.

The training of these procedures is carried out by national training organisations or manufacturers that are accredited to teach the relevant national competency standards that may be set in legislation.

The achieved competence should be documented by a certificate.

2. Information and training

2.1) The training should include the substance of the following.

2.2) Information about the explosion potential of FLAMMABLE REFRIGERANTS to show that flammables may be dangerous when handled without care.

2.3) Information about POTENTIAL IGNITION SOURCES, especially those that are not obvious, such as lighters, light switches, vacuum cleaners, electric heaters.

2.4) Information about the different safety concepts:

- Unventilated-Safety of the appliance does not depend on ventilation of the housing.
- Switching off the appliance or opening of the housing has no significant effect on the safety.
- Nevertheless, it is possible that leaking refrigerant may accumulate inside the enclosure and flammable atmosphere will be released when the enclosure is opened.
- Ventilated enclosure-Safety of the appliance depends on ventilation of the housing.
- Switching off the appliance or opening of the enclosure has a significant effect on the safety.
- Care should be taken to ensure sufficient ventilation before.
- Ventilated room -Safety of the appliance depends on the ventilation of the room.
- Switching off the appliance or opening of the housing has no significant effect on the safety.
- The ventilation of the room shall not be switched off during repair procedures.

2.5) Information about refrigerant detectors:

- Principle of function, including influences on the operation.
- Procedures, how to repair, check or replace a refrigerant detector or parts of it in a safe way.
- Procedures, how to disable a refrigerant detector in case of repair work on the refrigerant carrying parts.

2.6) Information about the concept of sealed components and sealed enclosures according to IEC60079-15:2010.

2.7) Information about the correct working procedures:

a) Commissioning

- Ensure that the floor area is sufficient for the REFRIGERANT CHARGE or that the ventilation duct is assembled in a correct manner.
- Connect the pipes and carry out a leak test before charging with refrigerant.
- Check safety equipment before putting into service.

b) Maintenance

- Portable equipment shall be repaired outside or in a workshop specially equipped for servicing units with FLAMMABLE REFRIGERANTS.
- Ensure sufficient ventilation at the repair place.
- Be aware that malfunction of the equipment may be caused by refrigerant loss and a refrigerant leak is possible.
- Discharge capacitors in a way that won't cause any spark. The standard procedure to short circuit the capacitor terminals usually creates sparks.
- Reassemble sealed enclosures accurately. If seals are worn, replace them.
- Check safety equipment before putting into service.

c) Repair

- Portable equipment shall be repaired outside or in a workshop specially equipped for servicing units with FLAMMABLE REFRIGERANTS.
- Ensure sufficient ventilation at the repair place.
- Be aware that malfunction of the equipment may be caused by refrigerant loss and a refrigerant leak is possible.

• Discharge capacitors in a way that won't cause any spark.
• When brazing is required, the following procedures shall be carried out in the right order: Remove the refrigerant. If the recovery is not required by national regulations, drain the refrigerant to the outside. Take care that the drained refrigerant will not cause any danger. In doubt, one person should guard the outlet. Take special care that drained refrigerant will not float back into the building.
--Evacuate the refrigerant circuit.
--Purge the refrigerant circuit with nitrogen for 5 min (not required for A2L REFRIGERANTS).
--Evacuate again (not required for A2L REFRIGERANTS).
--Remove parts to be replaced by cutting, not by flame.
--Purge the braze point with nitrogen during the brazing procedure.
--Carry out a leak test before charging with refrigerant.
• Reassemble sealed enclosures accurately. If seals are worn, replace them.
• Check safety equipment before putting into service.
d) Disposal
• Ensure sufficient ventilation at the working place.
• Remove the refrigerant. If the recovery is not required by national regulations, drain the refrigerant to the outside. Take care that the drained refrigerant will not cause any danger. In doubt, one person should guard the outlet. Take special care that drained refrigerant will not float back into the building.
• When flammable refrigerants are used,
--evacuate the refrigerant circuit.
--purge the refrigerant circuit with oxygen free nitrogen.
--evacuate again. (not required for A2L refrigerants);
--cut out the compressor and drain the oil.

Information on servicing

1. General

The manual shall contain specific information for service personnel according.

2. Checks to the area

Prior to beginning work on systems containing FLAMMABLE REFRIGERANTS, safety checks are necessary to ensure that the risk of ignition is minimised.
For repair to the REFRIGERATING SYSTEM

3. Work procedure

Work shall be undertaken under a controlled procedure so as to minimise the risk of a flammable gas or vapour being present while the work is being performed.

4. General work area

All maintenance staff and others working in the local area shall be instructed on the nature of work being carried out. Work in confined spaces shall be avoided.

5. Checking for presence of refrigerant

The area shall be checked with an appropriate refrigerant detector prior to and during work, to ensure the technician is aware of potentially toxic or flammable atmospheres. Ensure that the leak detection equipment being used is suitable for use with all applicable refrigerants, i. e. non-sparking, adequately sealed or intrinsically safe.

6. Presence of fire extinguisher

If any hot work is to be conducted on the refrigerating equipment or any associated parts, appropriate fire extinguishing equipment shall be available to hand. Have a dry powder or CO2 fire extinguisher adjacent to the charging area.

a) Commissioning

- Ensure that the floor area is sufficient for the REFRIGERANT CHARGE or that the ventilation duct is assembled in a correct manner.
- Connect the pipes and carry out a leak test before charging with refrigerant.
- Check safety equipment before putting into service.

b) Maintenance

- Portable equipment shall be repaired outside or in a workshop specially equipped for servicing units with FLAMMABLE REFRIGERANTS.
- Ensure sufficient ventilation at the repair place.
- Be aware that malfunction of the equipment may be caused by refrigerant loss and a refrigerant leak is possible.
- Discharge capacitors in a way that won't cause any spark. The standard procedure to short circuit the capacitor terminals usually creates sparks.
- Reassemble sealed enclosures accurately. If seals are worn, replace them.
- Check safety equipment before putting into service.

c) Repair

- Portable equipment shall be repaired outside or in a workshop specially equipped for servicing units with FLAMMABLE REFRIGERANTS.
- Ensure sufficient ventilation at the repair place.
- Be aware that malfunction of the equipment may be caused by refrigerant loss and a refrigerant leak is possible.
- Discharge capacitors in a way that won't cause any spark.
- When brazing is required, the following procedures shall be carried out in the following order:

--Safely remove the refrigerant following local and national regulations. If the recovery is not required by national regulations, drain the refrigerant to the outside. Take care that the drained refrigerant will not cause any danger. In doubt, one person should guard the outlet. Take special care that drained refrigerant will not float back into the building;

d) Decommissioning

- If the safety is affected when the equipment is putted out of service, the REFRIGERANT CHARGE shall be removed before decommissioning.
- Ensure sufficient ventilation at the equipment location.
- Be aware that malfunction of the equipment may be caused by refrigerant loss and a refrigerant leak is possible.
- Discharge capacitors in a way that won't cause any spark.
- Remove the refrigerant. If the recovery is not required by national regulations, drain the refrigerant to the outside. Take care that the drained refrigerant will not cause any danger. In doubt,one person should guard the outlet. Take special care that drained refrigerant will not float back into the building.
- When FLAMMABLE REFRIGERANTS except A2L REFRIGERANTS are used,

--Evacuate the refrigerant circuit.

7. No ignition sources

No person carrying out work in relation to a REFRIGERATING SYSTEM which involves exposing any pipe work shall use any sources of ignition in such a manner that it may lead to the risk of fire or explosion. All possible ignition sources, including cigarette smoking, should be kept sufficiently far away from the site of installation, repairing, removing and disposal, during which refrigerant can possibly be released to the surrounding space. Prior to work taking place, the area around the equipment is to be surveyed to make sure that there are no flammable hazards or ignition risks. “No Smoking” signs shall be displayed.

8. Ventilated area

Ensure that the area is in the open or that it is adequately ventilated before breaking into the system or conducting any hot work. A degree of ventilation shall continue during the period that the work is carried out. The ventilation should safely disperse any released refrigerant and preferably expel it externally into the atmosphere.

9. Checks to the refrigerating equipment

Where electrical components are being changed, they shall be fit for the purpose and to the correct specification. At all times the manufacturer’s maintenance and service guidelines shall be followed. If in doubt, consult the manufacturer’s technical department for assistance.
The following checks shall be applied to installations using.

FLAMMABLE REFRIGERANTS:

--the actual REFRIGERANT CHARGE is in accordance with the room size within which the refrigerant containing parts are installed;

--the ventilation machinery and outlets are operating adequately and are not obstructed;

--if an indirect refrigerating circuit is being used, the secondary circuit shall be checked for the presence of refrigerant;

--marking to the equipment continues to be visible and legible. Markings and signs that are illegible shall be corrected;

--refrigerating pipe or components are installed in a position where they are unlikely to be exposed to any substance which may corrode refrigerant containing components, unless the components are constructed of materials which are inherently resistant to being corroded or are suitably protected against being so corroded.

10. Checks to electrical devices

Repair and maintenance to electrical components shall include initial safety checks and component inspection procedures. If a fault exists that could compromise safety, then no electrical supply shall be connected to the circuit until it is satisfactorily dealt with. If the fault cannot be corrected immediately but it is necessary to continue operation, an adequate temporary solution shall be used. This shall be reported to the owner of the equipment so all parties are advised.

Initial safety checks shall include:

• that capacitors are discharged: this shall be done in a safe manner to avoid possibility of sparking;

• that no live electrical components and wiring are exposed while charging, recovering or purging the system;

• that there is continuity of earth bonding.

11. Repairs to sealed components

1) During repairs to sealed components, all electrical supplies shall be disconnected from the equipment being worked upon prior to any removal of sealed covers, etc. If it is absolutely necessary to have an electrical supply to equipment during servicing, then a permanently operating form of leak detection shall be located at the most critical point to warn of a potentially hazardous situation.

2) Sealed electrical components shall be replaced.

12. Repair to intrinsically safe components

Do not apply any permanent inductive or capacitance loads to the circuit without ensuring that this will not exceed the permissible voltage and current permitted for the equipment in use. Intrinsically safe components must be replaced.

Replace components only with parts specified by the manufacturer. Other parts may result in the ignition of refrigerant in the atmosphere from a leak.

13. Cabling

Check that cabling will not be subject to wear, corrosion, excessive pressure, vibration, sharp edges or any other adverse environmental effects. The check shall also take into account the effects of aging or continual vibration from sources such as compressors or fans.

14. Detection of flammable refrigerants

Under no circumstances shall potential sources of ignition be used in the searching for or detection of refrigerant leaks. A halide torch (or any other detector using a naked flame) shall not be used. The following leak detection methods are deemed acceptable for all refrigerant systems. Electronic leak detectors may be used to detect refrigerant leaks but, in the case of FLAMMABLE REFRIGERANTS, the sensitivity may not be adequate, or may need re-calibration. (Detection equipment shall be calibrated in a refrigerant-free area.)

Ensure that the detector is not a potential source of ignition and is suitable for the refrigerant used.

Leak detection equipment shall be set at a percentage of the LFL of the refrigerant and shall be calibrated to the refrigerant employed, and the appropriate percentage of gas (25 % maximum) is confirmed.

Leak detection fluids are also suitable for use with most refrigerants but the use of detergents containing chlorine shall be avoided as the chlorine may react with the refrigerant and corrode the copper pipe-work.

If a leak is suspected, all naked flames shall be removed/extinguished.

If a leakage of refrigerant is found which requires brazing, all of the refrigerant shall be recovered from the system, or isolated (by means of shut off valves) in a part of the system remote from the leak. Removal of refrigerant shall be according to Removal and evacuation.

15. Removal and evacuation

When breaking into the refrigerant circuit to make repairs -or for any other purpose- conventional procedures shall be used. However, for flammable refrigerants it is important that best practice be followed, since flammability is a consideration.

The following procedure shall be adhered to:
--safely remove refrigerant following local and national regulations;
--purge the circuit with inert gas(optional for A2L);
--evacuate(optional for A2L);
-- continuously flush or purge with inert gas when using flame to open circuit ; and
--open the circuit.
The refrigerant charge shall be recovered into the correct recovery cylinders if venting is not allowed by local and national codes. For appliances containing flammable refrigerants, the system shall be purged with oxygen-free nitrogen to render the appliance safe for flammable refrigerants. This process might need to be repeated several times. Compressed air or oxygen shall not be used for purging refrigerant systems. For appliances containing flammable refrigerants, refrigerants purging shall be achieved by breaking the vacuum in the system with oxygen-free nitrogen and continuing to fill until the working pressure is achieved, then venting to atmosphere, and finally pulling down to a vacuum (optional for A2L). This process shall be repeated until no refrigerant is within the system (optional for A2L). When the final oxygen-free nitrogen charge is used, the system shall be vented down to atmospheric pressure to enable work to take place.
The outlet for the vacuum pump shall not be close to any potential ignition sources, and ventilation shall be available.

16. Charging procedures

In addition to conventional charging procedures, the following requirements shall be followed.

- Ensure that contamination of different refrigerants does not occur when using charging equipment. Hoses or lines shall be as short as possible to minimise the amount of refrigerant contained in them.
- Cylinders shall be kept in an appropriate position according to the instructions.
- Ensure that the REFRIGERATING SYSTEM is earthed prior to charging the system with refrigerant.
- Label the system when charging is complete (if not already).
- Extreme care shall be taken not to overfill the REFRIGERATING SYSTEM. Prior to recharging the system, it shall be pressure-tested with the appropriate purging gas. The system shall be leak-tested on completion of charging but prior to commissioning. A follow up leak test shall be carried out prior to leaving the site.

17. Decommissioning

Before carrying out this procedure, it is essential that the technician is completely familiar with the equipment and all its detail. It is recommended good practice that all refrigerants are recovered safely. Prior to the task being carried out, an oil and refrigerant sample shall be taken in case analysis is required prior to re-use of recovered refrigerant.
It is essential that electrical power is available before the task is commenced.
a) Become familiar with the equipment and its operation.
b) Isolate system electrically.
c) Before attempting the procedure, ensure that:

- Mechanical handling equipment is available, if required, for handling refrigerant cylinders;
- All personal protective equipment is available and being used correctly;
- The recovery process is supervised at all times by a competent person;
- Recovery equipment and cylinders conform to the appropriate standards.

d) Pump down refrigerant system, if possible.
e) If a vacuum is not possible, make a manifold so that refrigerant can be removed from various parts of the system.
f) Make sure that cylinder is situated on the scales before recovery takes place.
g) Start the recovery machine and operate in accordance with instructions.
h) Do not overfill cylinders (no more than 80 % volume liquid charge).
i) Do not exceed the maximum working pressure of the cylinder, even temporarily.
j) When the cylinders have been filled correctly and the process completed, make sure that the cylinders and the equipment are removed from site promptly and all isolation valves on the equipment are closed off.
k) Recovered refrigerant shall not be charged into another REFRIGERATING SYSTEM unless it has been cleaned and checked.

18. Labelling

Equipment shall be labelled stating that it has been de-commissioned and emptied of refrigerant. The label shall be dated and signed. For appliances containing FLAMMABLE REFRIGERANTS, ensure that there are labels on the equipment stating the equipment contains FLAMMABLE REFRIGERANT.

19. Recovery

When removing refrigerant from a system, either for servicing or decommissioning, it is recommended good practice that all refrigerants are removed safely. When transferring refrigerant into cylinders, ensure that only appropriate refrigerant recovery cylinders are employed. Ensure that the correct number of cylinders for holding the total system charge is available. All cylinders to be used are designated for the recovered refrigerant and labelled for that refrigerant (i. e. special cylinders for the recovery of refrigerant). Cylinders shall be complete with pressure-relief valve and associated shut-off valves in good working order. Empty recovery cylinders are evacuated and, if possible, cooled before recovery occurs.

The recovery equipment shall be in good working order with a set of instructions concerning the equipment that is at hand and shall be suitable for the recovery of the flammable refrigerant. If in doubt, the manufacturer should be consulted. In addition, a set of calibrated weighing scales shall be available and in good working order. Hoses shall be complete with leak-free disconnect couplings and in good condition.

The recovered refrigerant shall be processed according to local legislation in the correct recovery cylinder, and the relevant waste transfer note arranged. Do not mix refrigerants in recovery units and especially not in cylinders.

If compressors or compressor oils are to be removed, ensure that they have been evacuated to an acceptable level to make certain that flammable refrigerant does not remain within the lubricant.

The compressor body shall not be heated by an open flame or other ignition sources to accelerate this process. When oil is drained from a system, it shall be carried out safely.

SPECIFICATIONS

MODEL	CTH80D	CTH120D	CTH150D&CTH150PD
Rated Voltage/Frequency	115V/60Hz	115V~60Hz	115V/60Hz
Rated Current	4.0 A	5.0 A	7.5 A
Rated Input Power	370W	470W	750W
Moisture Removal Capacity(at 65°F, 60%RH)	25 Pints/Day	32 Pints/Day	50 Pints/Day
Moisture Removal Capacity(at 80°F, 60%RH)	37 Pints/Day	48 Pints/Day	75 Pints/Day
Moisture Removal Capacity(at 86°F, 80%RH)	57 Pints/Day	72 Pints/Day	123 Pints/Day
Moisture Removal Capacity(at 95°F, 90%RH)	80 Pints/Day	120 Pints/Day	150 Pints/Day
Integrated Energy Factor (IEF, at 65°F, 60%RH)	1.85 L/kWh	2.01 L/kWh	2.2 L/kWh
Motor FLA	0.33 A	0.37 A	0.4-0.5 A
Motor Compressor (RLA/LRA)	2.4 A/14.5 A	2.7 A/17.2 A	5.6 A/28 A
Refrigerant/Charge	R32/3.52 oz	R32/3.88 oz	R32/5.99 oz
Max. Allowable Pressure	5.5 Mpa	5.5 Mpa	5.5 Mpa
Suction Pressure	2.5 Mpa	2.5 Mpa	2.5 Mpa
Discharge Pressure	5.2 Mpa	5.2 Mpa	5.2 Mpa

Note:

Recommended operating temperature: 41°F to 90°F. The dehumidifier may experience malfunctions outside of this temperature range.

The manufacturer reserves the right to modify the product without formal notice to the public.

⚠ WARNING:

This product can expose you to chemicals including styrene and its compounds, which are known to the State of California to cause cancer or birth defects or other reproductive harm. For more information go to www.P65Warnings.ca.gov.

Important:

This warning is legally required by California's Proposition 65, which mandates disclosure even for trace amounts of certain substances. The warning does not indicate that the product is unsafe when used as intended; the risk primarily applies to long-term exposure to significant amounts of these substances. The levels in this product are negligible and within safe limits.

WARRANTY & CONTACT

We're Here to Support You

At Waykar, your satisfaction matters. If you have questions about your product, need assistance, or require replacement parts, our customer support team is ready to help.
Email: support@waykar.com | Phone: (213) 895-4871

Manufacturer's Warranty

All Waykar products are covered by a 12-month limited manufacturer's warranty from the date of purchase. This warranty applies to products purchased directly from Waykar or through authorized retailers. An order invoice or proof of purchase may be required when requesting service.

Extend Your Warranty by 1 Year

Register your product on our official website to enjoy an additional 12 months of warranty coverage—at no extra cost.

How to register:

Visit www.waykar.com and complete the product registration form. Please include your Order ID and Date of Purchase, if applicable.

What Is Not Covered

The warranty does not cover damage resulting from improper use or handling, including but not limited to:

1. Failing to follow the instructions in the manual.
2. Purposeful mishandling of the device.
3. Damaging the device through violent impact.
4. Exposing the device to liquids or infiltrating foreign particles.
5. Unauthorized modification or overhauling of the device.
6. Damage from placing the device upside down.

Normal wear and tear is not covered under warranty.

WAYKAR Office

- 221 York Rd, Blacksburg, SC 29702 USA
- Email: support@waykar.com
- Tel: (213)-895-4871
- Live Chat: www.waykar.com
- 24/7 Full-Time Response

*Have your Order Number ready before contacting customer support.



waykar

Scan the QR code
for Live Chat

@ Waykar

We hope our products will make your living space healthier and more comfortable.
Your satisfaction is our top priority.
Feel free to tag us when you share a snap on your social media.

WAYKAR All rights reserved.