586339
VANITY TOPS

Cultured Marble Vanity Top 37x22
White on White

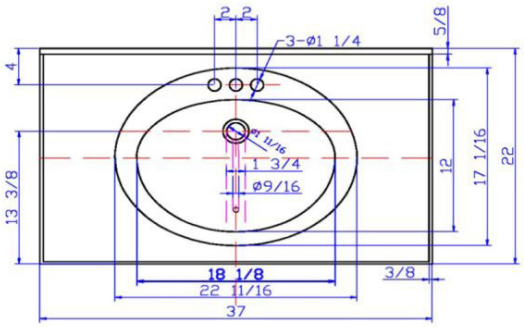

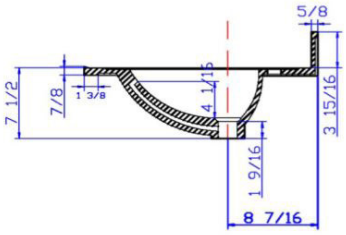

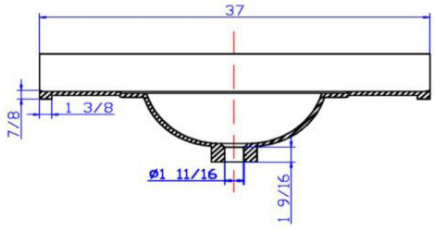

Tolerance		
	+	-
Length	0	7/16"
Width	0	1/4"
Thickness	1/16"	1/16"

SPECIFICATIONS

MATERIAL:	Cultured Marble
TOOLS NEEDED FOR INSTALLATION:	100% silicone
ASSEMBLED DIMENSIONS:	11.09" H x 37" L x 22" D
ASSEMBLED WEIGHT:	51.25 lbs.
FAUCET TYPE:	Lav Centerset
NUMBER OF MOUNTING HOLES:	3
BOWL MATERIAL:	Cultured Marble
BACK SPLASH INCLUDED:	Yes
COLOR:	White on White
NUMBER OF BOWLS:	1
BOWL DIMENSIONS:	5.63" H x 11.63" W x 16.85" D
BOWL SHAPE:	Oval
SINK THICKNESS:	0.98"
MOUNTING TYPE:	Integrated
OVERFLOW HOLE:	Yes

WARRANTY:	5-Year limited warranty
LEGAL FOR SALE IN CALIFORNIA:	Yes

TYPE:
JOB:
ORDER CODE:
APPROVALS:

6/26/2019

Design House reserves the right to make changes in materials, specifications & models at any time. Design House also reserves the right to discontinue product without notice or obligation.