

PLSW KING AIR

Meet the PLSW KING AIR. This wall-mounted range hood isn't just an appliance; it's a contemporary design statement, available in both elegant black and pristine white finishes to complement any kitchen aesthetic. Whether as a striking contrast or a minimalist addition, the PLSW KING AIR is designed to fit seamlessly into your kitchen decor.

Beyond its stylish appearance, the PLSW KING AIR boasts a powerful 550 CFM single or 1200 CFM dual blower (48 inch only), adept at eliminating smoke, odors, and airborne impurities, thus ensuring your kitchen remains a pleasant, smoke-free environment. Despite its robust performance, it operates quietly at 48 or 56 dB, preserving the tranquility of your cooking space.

The hood is further enhanced with two 1.5W LED lights, providing bright, energy-efficient illumination for your culinary activities.

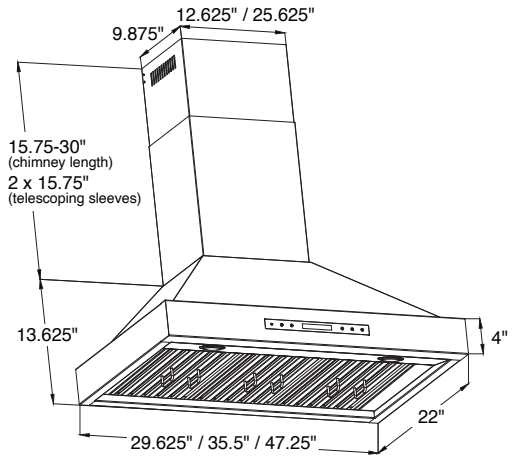

Configuration and Dimensions

Hood Type. . . . . .Wall
Sizes Available . . . . . .30 | 36 | 48
30" Dimensions. . . . . .29.625" W x 22" D x 13.625" H
36" Dimensions. . . . . 35.5" W x 22" D x 13.625" H
48" Dimensions. . . . . .47.25" W x 22" D x 13.625" H
Chimney Dimensions: . . . . . 12.625" (30-36) W or 25.625" (48) W x 9.875" D x 15.75"–30" H (Telescoping with Two Interlocking 15.75" Sleeves)

Features

Control Type . . . . . Digital Touch Control
Lighting . . . . . .1.5W LED

Ventilation System

Maximum Air Flow Capacity . . . . . .550 (30/36) or 1200 (48) CFM
Speed Levels . . . . . 4 Speed
Airflow (Quiet/Low/Med/High). . . . . .150/300/400/550 (30/36) or 300/600/900/1200 (48)
Noise Level . . . . . .48/56 db or 4/7 Sones Max
Duct Type/Size . . . . . .6" round outlet (30/36) or 2 pcs of 6" round outlet (48)
Voltage 110v
Motor . . . . . Single (30/36) or Dual (48)
Filter Type . . . . . Stainless Steel Baffle (Dishwasher Safe)
Material . . . . .High-Quality Stainless Steel 430 Stainless Steel or Durable Powder-Coated Finishes: Matte Black and Gloss White
Warranty . . . . . .3 Year Parts Warranty

Copyright © 2026 Proline Range Hoods. All rights reserved.