KOHLER

Desette™ | K-R29188

18" towel bar

Features

- 18" (457 mm) bar
- Coordinates with other products in the Desette collection



Available Colors/Finishes

Color tiles intended for reference only.

BN Vibrant Brushed Nickel

1-800-4KOHLER (1-800-456-4537)
Kohler Co. reserves the right to make revisions without notice to product specifications.
For the most current specification sheet, go to www.kohler.com USA or www.kohler.ca Canada.
3-27-2026 17:27 - US-CA

THE BOLD LOOK OF KOHLER

Codes/Standards

None Applicable

Material

- Premium metal construction for durability and reliability
- KOHLER finishes resist corrosion and tarnishing

Recommended Products/Accessories

K-23723 Faucet cleaner

Warranty

See website for detailed warranty information.

KOHLER® Faucet Lifetime Limited Warranty

1-800-4KOHLER (1-800-456-4537)
Kohler Co. reserves the right to make revisions without notice to product specifications.
For the most current specification sheet, go to www.kohler.com USA or www.kohler.ca Canada.
3-27-2026 17:27 - US-CA

THE BOLD LOOK OF KOHLER.

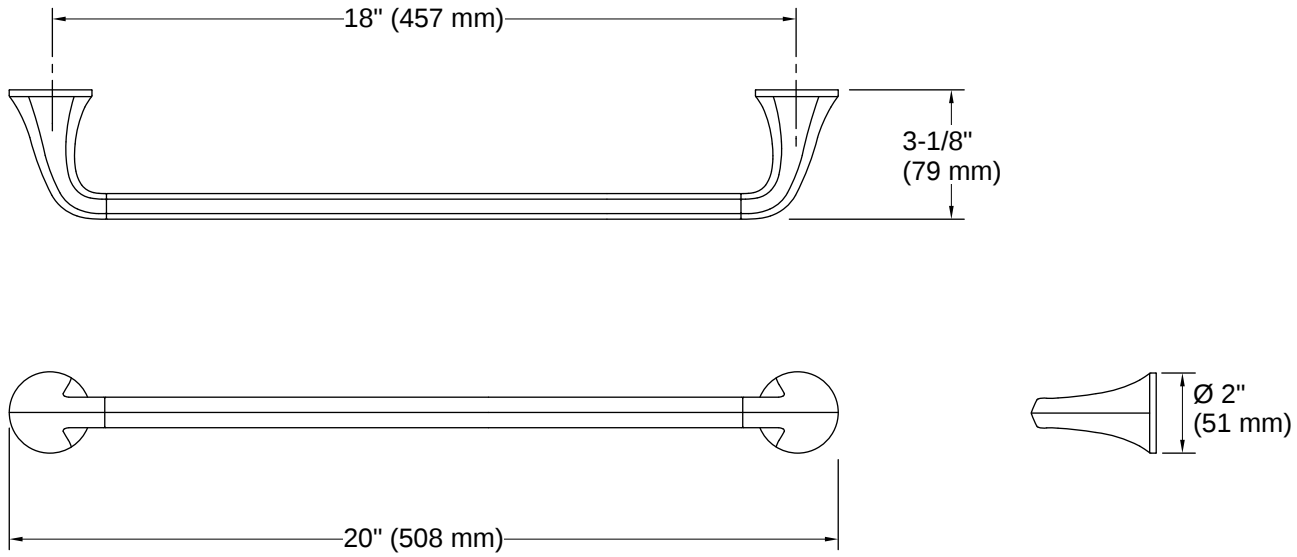

Installation

- Easy installation – no special tools required

Installation Notes

Install this product according to the installation instructions.

1-800-4KOHLER (1-800-456-4537)
Kohler Co. reserves the right to make revisions without notice to product specifications.
For the most current specification sheet, go to www.kohler.com USA or www.kohler.ca Canada.
3-27-2026 17:27 - US-CA

THE BOLD LOOK OF KOHLER.