Warnings and Cautions

Please retain this instruction for future usage and read carefully before assembly.

Make sure you have all the perts & hardware as item list shows.

3 adults or more are recommended to install your Sunroom.

Do not discard any of the packaging until you have checked that you have all the parts and pack of fittings.

Check all bolts for tightness before use,and periodically check and tighten bolts ensure your gazebo works properly.

Some parts might have sharp edger/corners/Please follow basic safety precautions to reduce the risk of hurts.

Avoid installing and settling the solarium in a corridor of heavy wind.

Some assembly parts contain sharp edges,you should wear protective gloves when handling these items.

For safety issues you must not leave the unit unattended if it is not completed, even if it is already anchored to the ground.

It is essential to place the gazebo on level ground and not less than **6 feet** from any obstruction such as fences, garages, overhanging branches, laundry lines, or electrical wires.

If you have questions or concerns.
Please contact us via email at **service@domioutdoorliving.com**

Domi outdoot living

domi
outdoor living

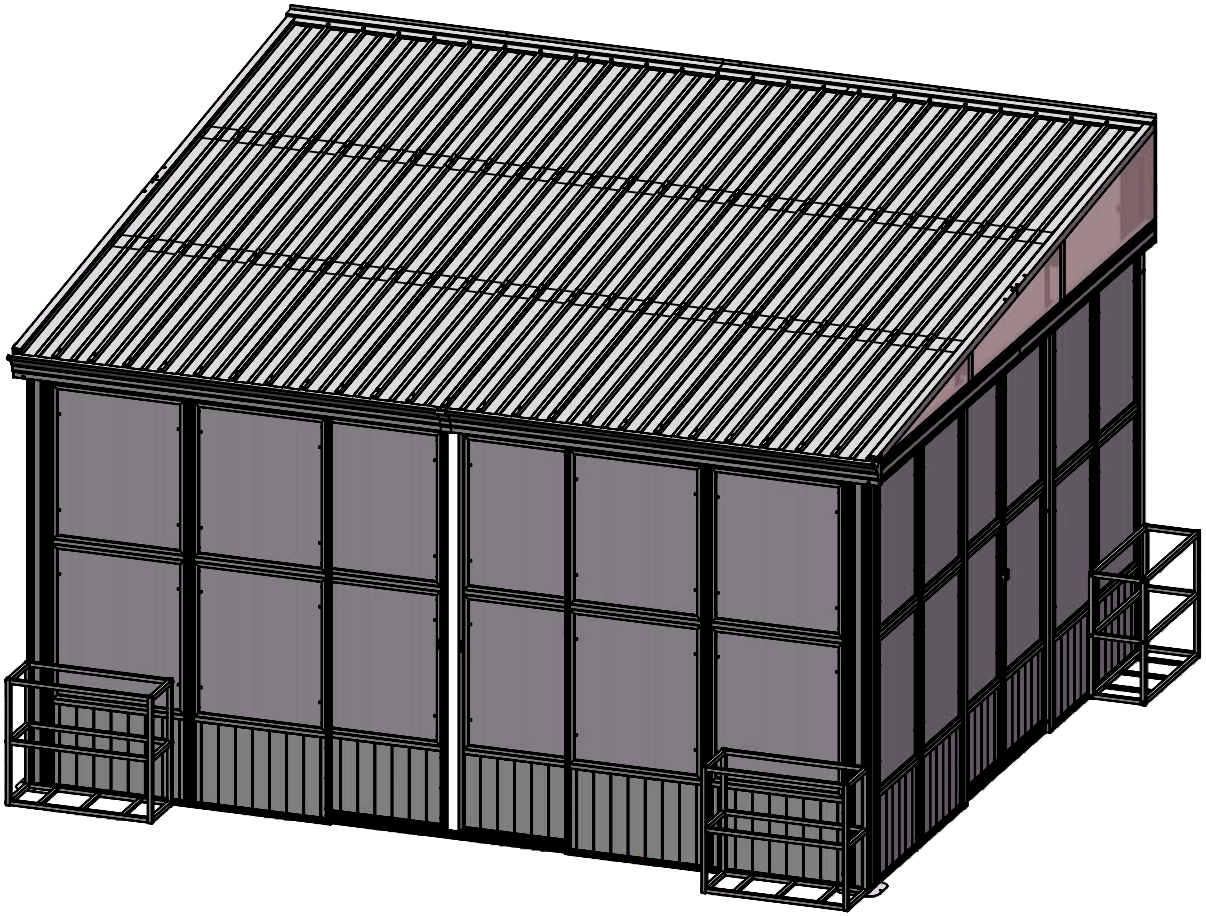

12'x14'

SKU: LGMF1617B

Solarium Wall-Mounted Sunroom

Assembly Manual

© Copyright 2023-2025 Domi Outdoor Living LLC.All Rights Reserved.

Thank you for your purchase of
Domi outdoor living's Sunroom

Read and follow this assembly and operation huide.
To reduce personal injury and damage to you Sunroom.
*We recommend a **three-person team** for assembly and disassembly.*
*Please **remove** snow accumulation at all times.*
Please scheduie enough time to complete the assembly of the sunroom.
It will takes approximately 7 hours to set up.

If you like our products,please tell other customers.
If you have problem with our products,please tell us.

Please feel free to contact us.

Domi Outdoor Living

domi
outdoor living

Pre-assembly

TOOLS THAT MAY BE REQUIRED (Not included in boxes)

***NOTE: Tools / equipment are not shown to actual size and scale.**



LEVEL

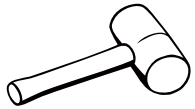

RUBBER MALLET



PHILLIPS SCREW



DRILL

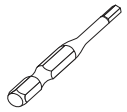

ALLEN KEY

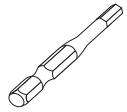

ALLEN KEY

EQUIPMENT REQUIRED (Not included in boxes)

***NOTE: Equipment are not shown to actual size and scale.**



SAFETY HAT



GLOVES



SAFETY GOGGLES



STEPLADDER

Matters needing attention



1. Three or more people are required for assembly.



2. Do not fully tighten screws prior to complete assembly.

Regulation

IMPORTANT: A sunroom may entail to purchase a municipal permit or be subject to specific building codes. It is the consumer's responsibility to inform themselves of any restrictions.

Care and Cleaning:

For cleaning, use a domestic soap or detergent and wash with warm water using a sponge or fabric. Rinse with clean water.

1

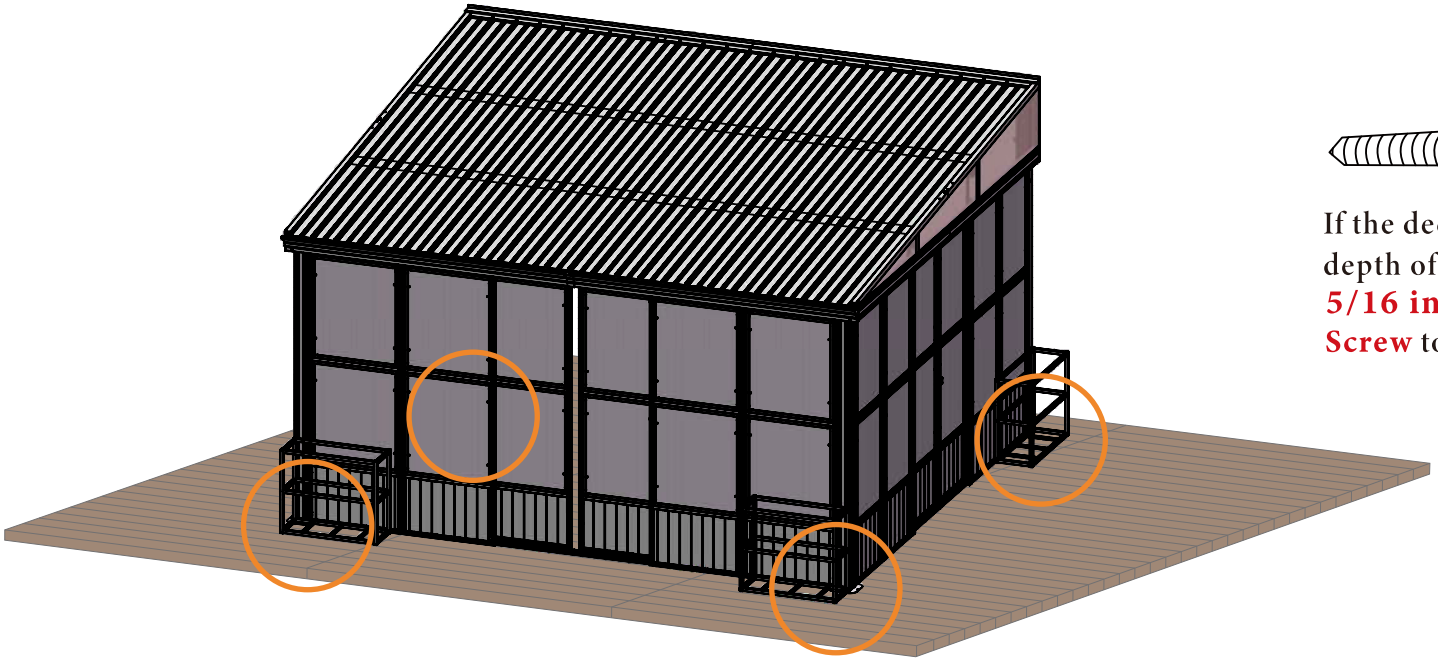

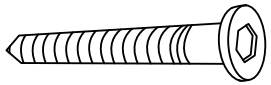

X12

If the deck is herd wood and the depth of it is over 3 inch, you can use **5/16 in.x4 in. Structural Wood Screw** to mount the pergola.

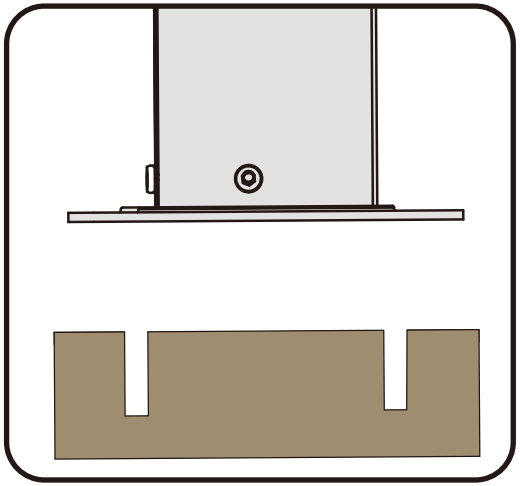

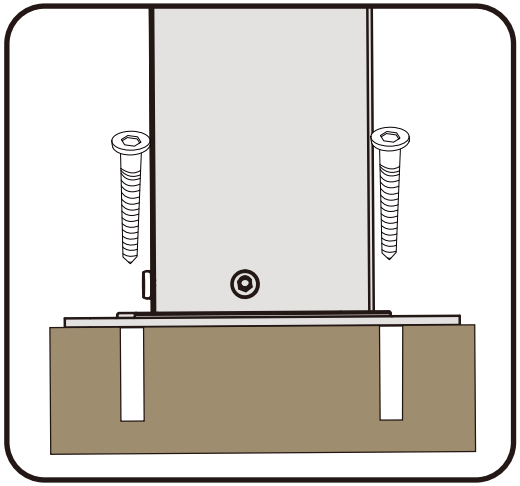

2

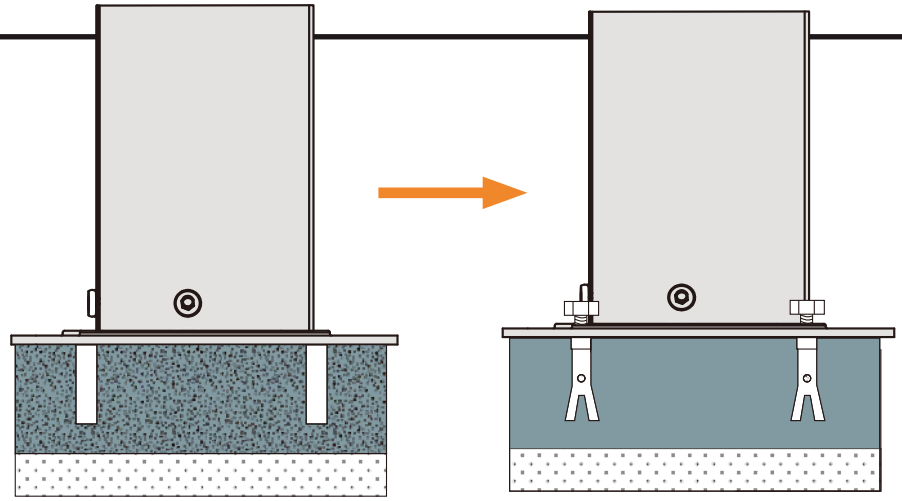

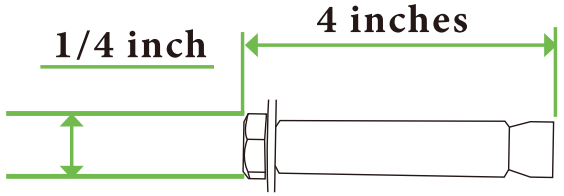

X12

If the ground is concreted and the depth of it is over 3 inch, you can use 1/4 inch expansion bolts to mount the pergola

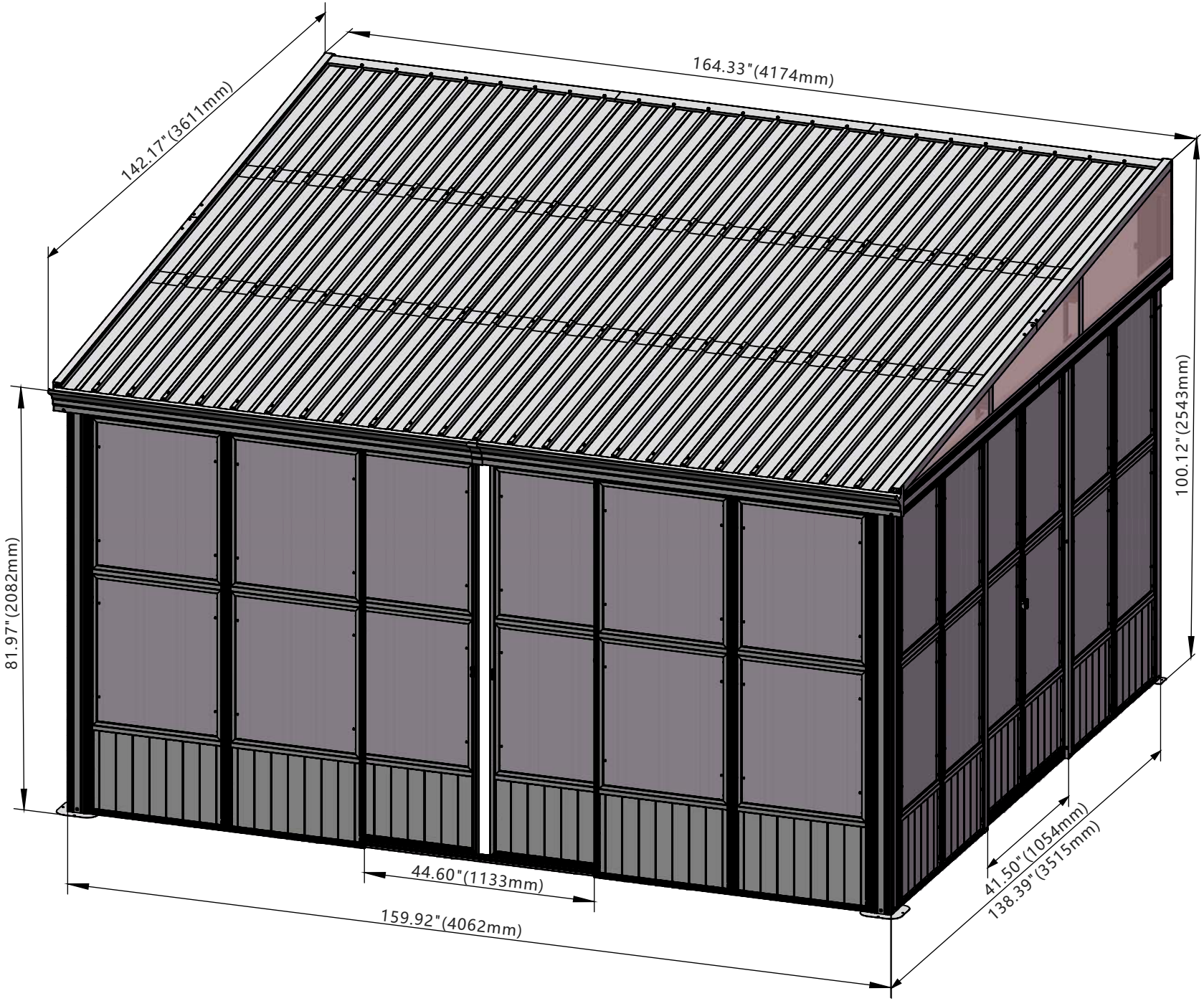
164.33"(4174mm)
142.17"(3611mm)
100.12"(2543mm)
81.97"(2082mm)
44.60"(1133mm)
159.92"(4062mm)
41.50"(1054mm)
138.39"(3515mm)

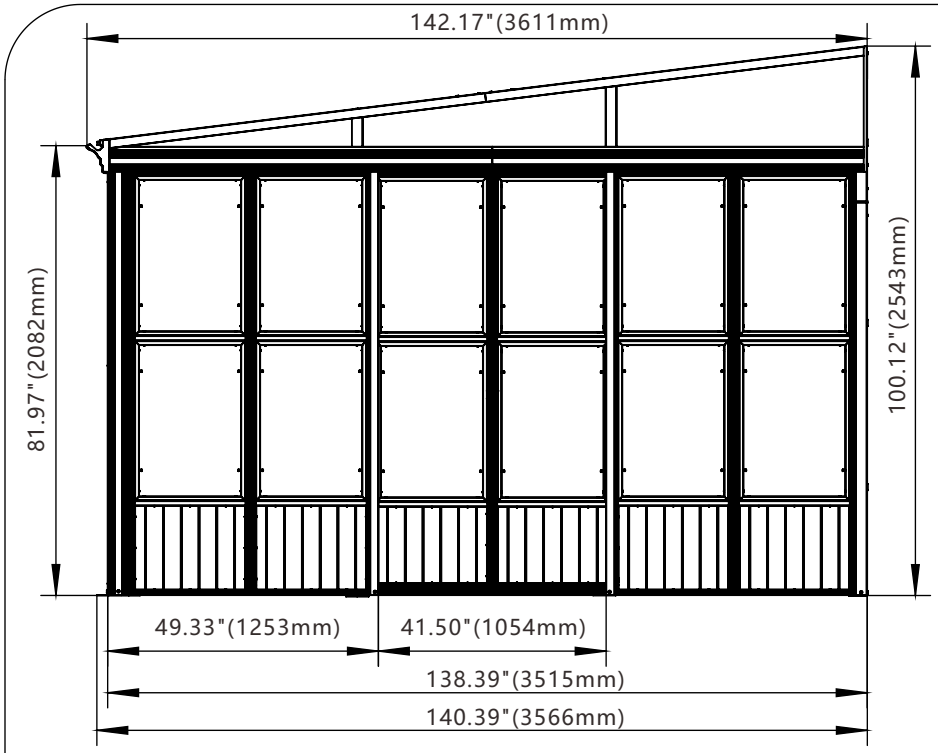
142.17"(3611mm)
81.97"(2082mm)
100.12"(2543mm)
49.33"(1253mm)
41.50"(1054mm)
138.39"(3515mm)
140.39"(3566mm)

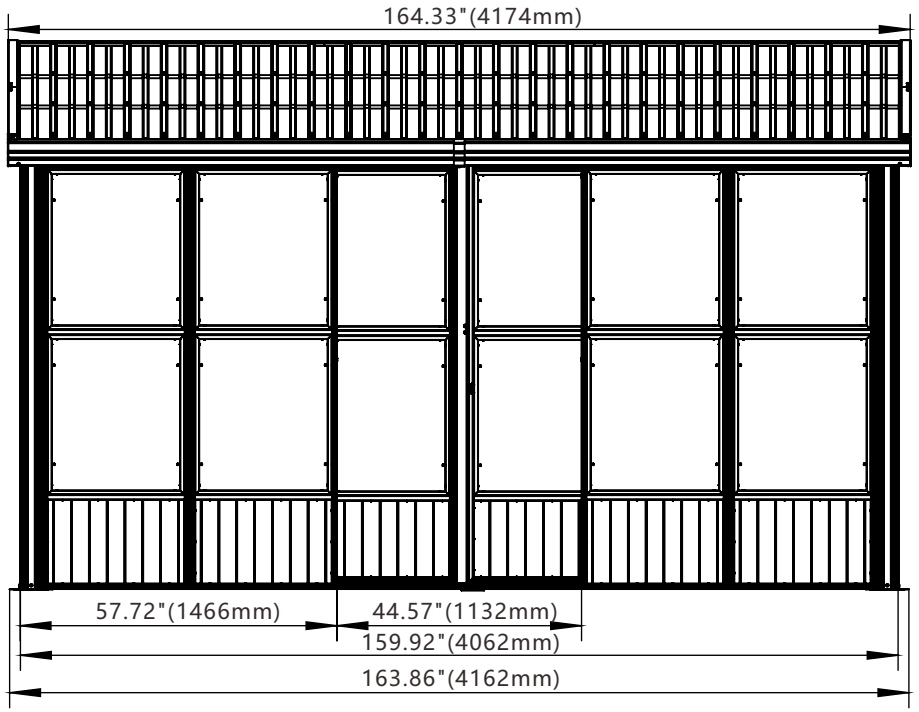
164.33"(4174mm)
57.72"(1466mm)
44.57"(1132mm)
159.92"(4062mm)
163.86"(4162mm)

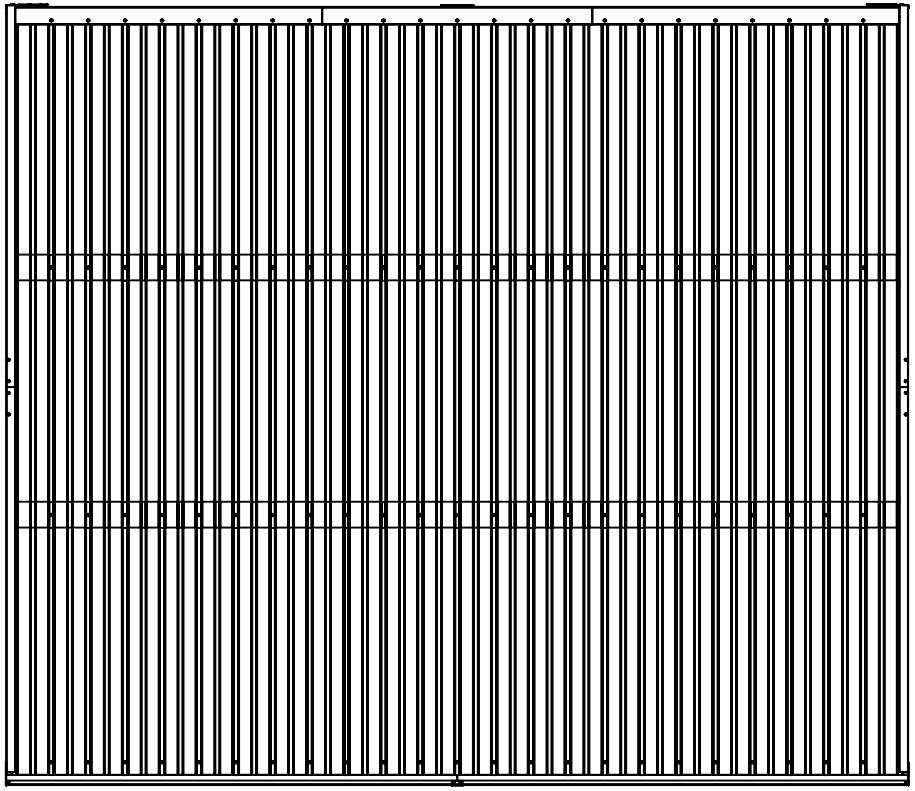

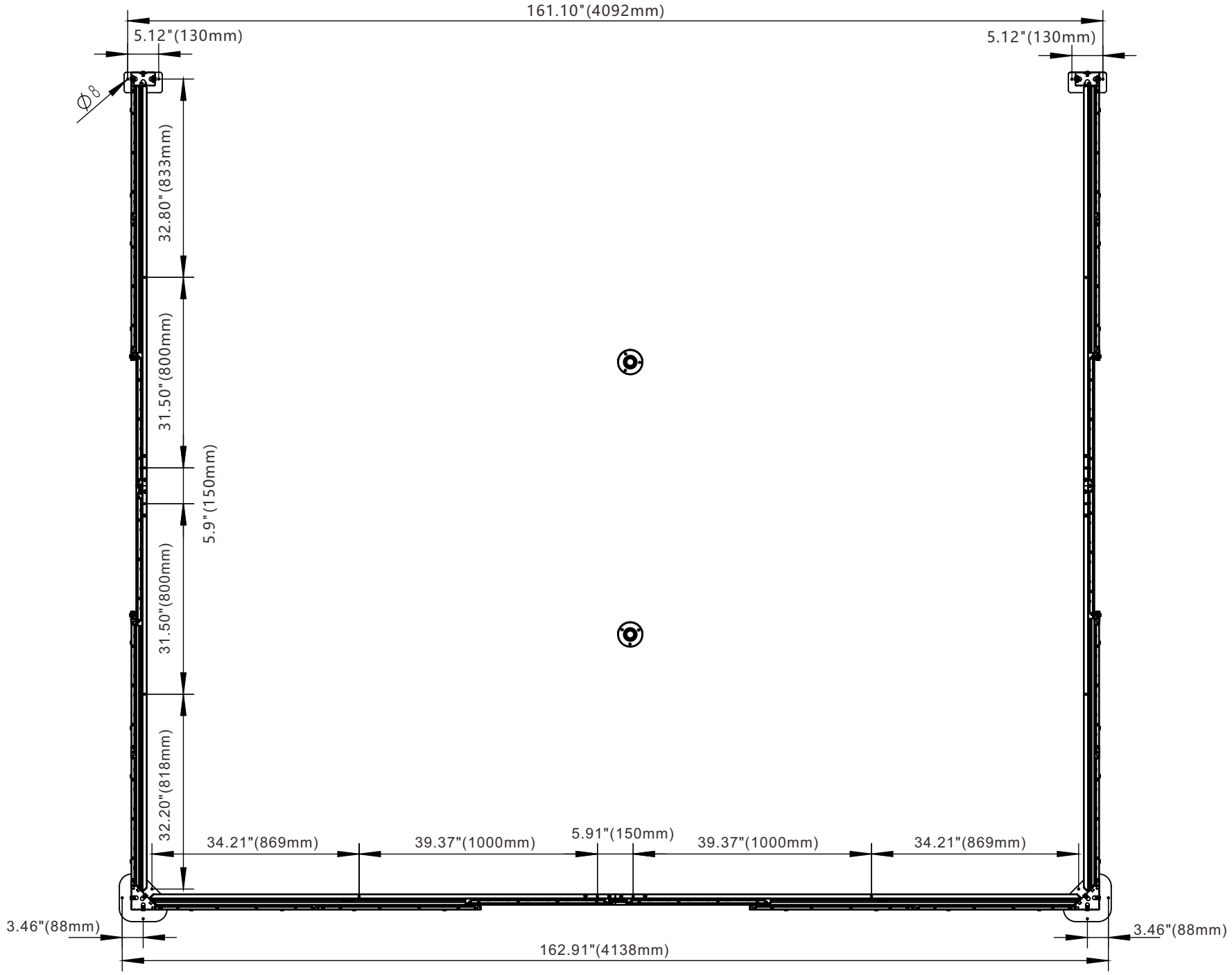
161.10"(4092mm)
5.12"(130mm)
5.12"(130mm)
Ø8
32.80"(833mm)
31.50"(800mm)
5.9"(150mm)
31.50"(800mm)
32.20"(818mm)
34.21"(869mm)
39.37"(1000mm)
5.91"(150mm)
39.37"(1000mm)
34.21"(869mm)
3.46"(88mm)
3.46"(88mm)
162.91"(4138mm)

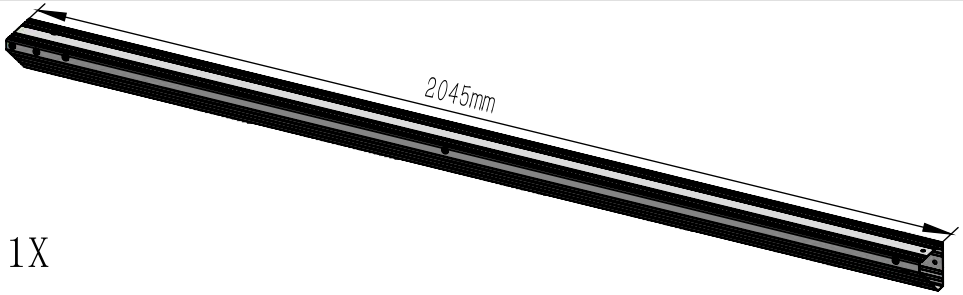

A1 1X

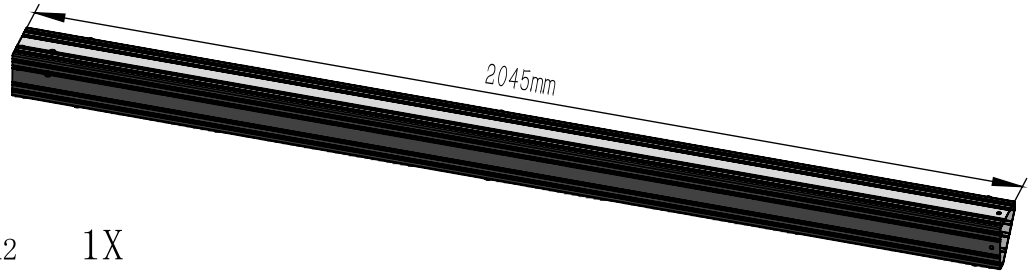

A2 1X

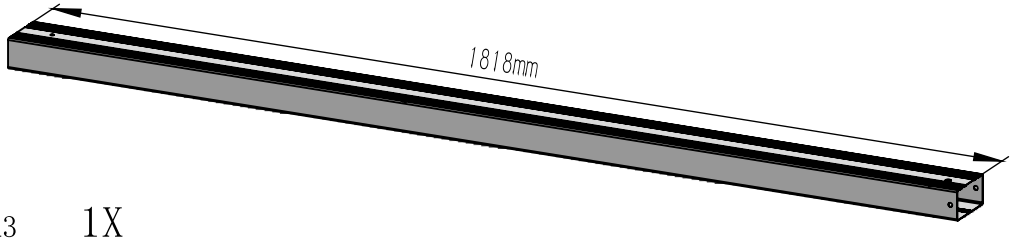

A3 1X

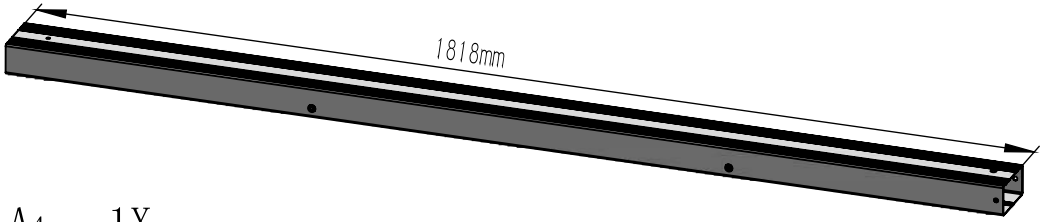

A4 1X

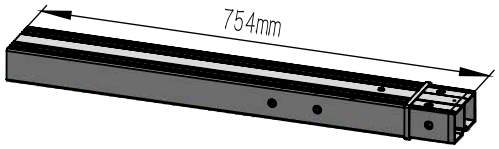

A5 1X

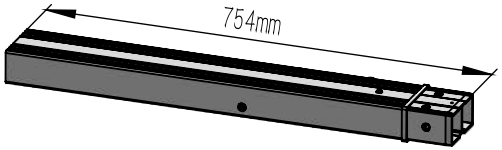

A6 1X

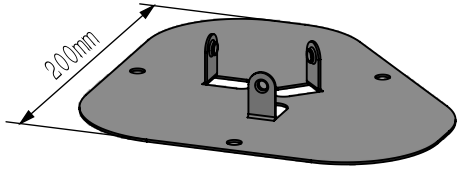

A7 2X

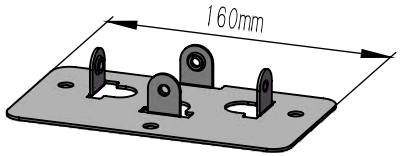

A8 2X

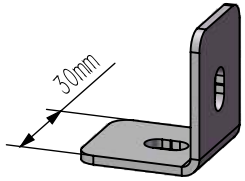

A9 6X

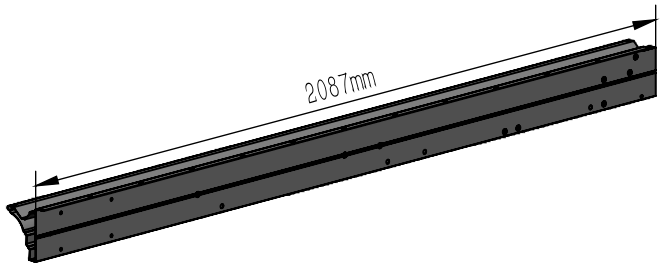

B1 1X

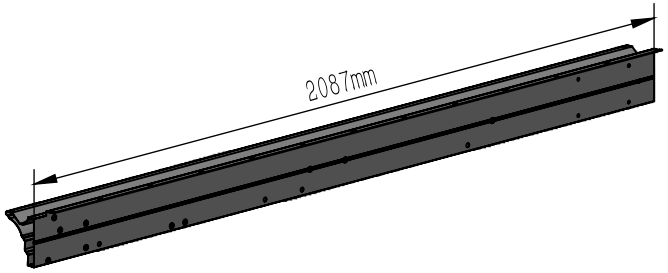

B2 1X

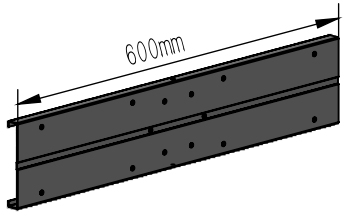

B3 1X

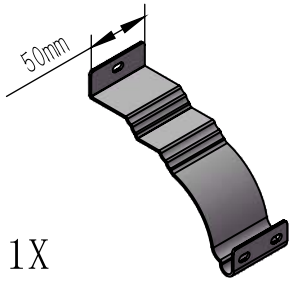

B4 1X

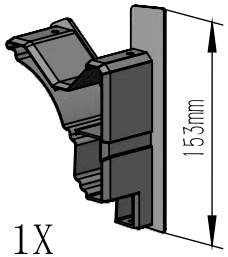

B5 1X

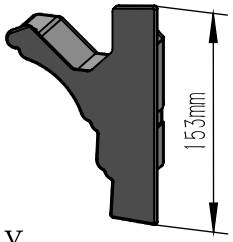

B6 1X

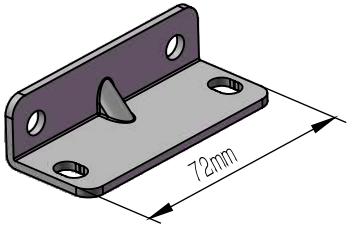

B7 6X

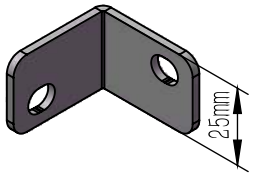

B8 1X

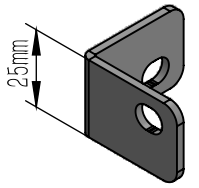

B9 1X

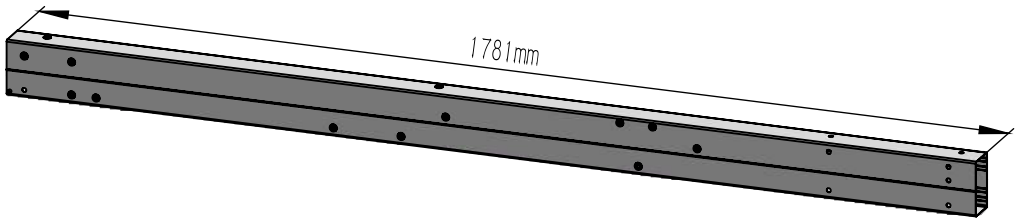

C1 1X

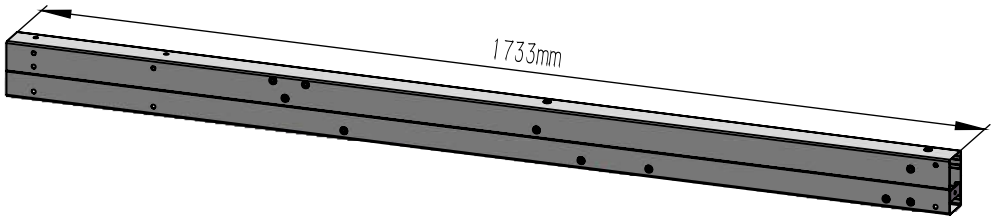

C2 1X

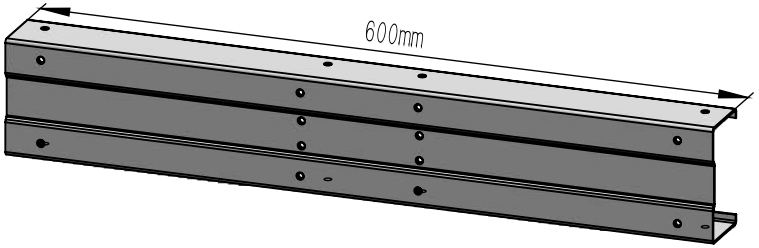

C3 2X

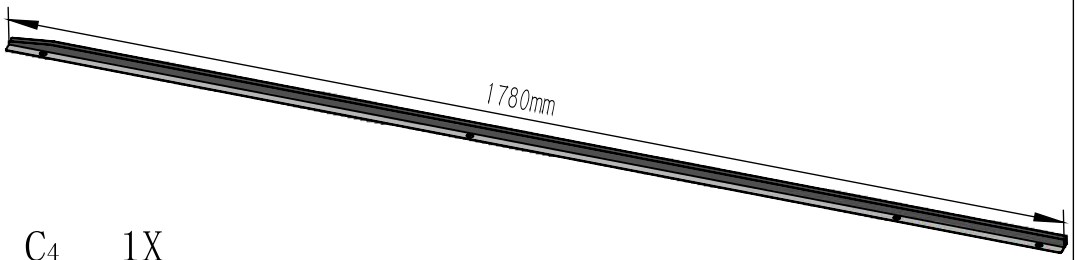

C4 1X

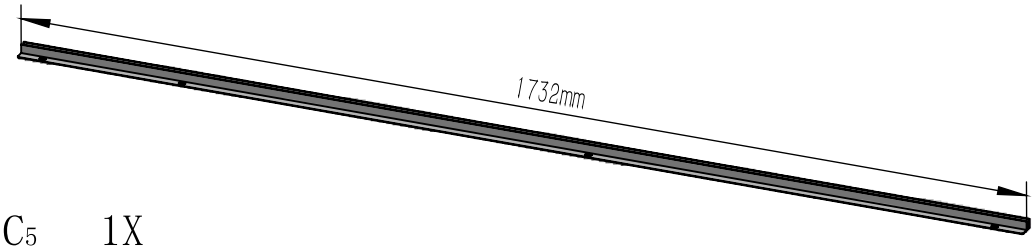

C5 1X

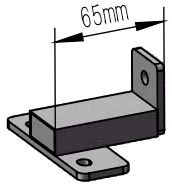

C6 2X

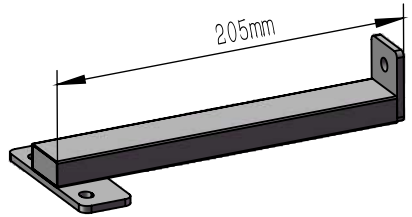

C7 2X

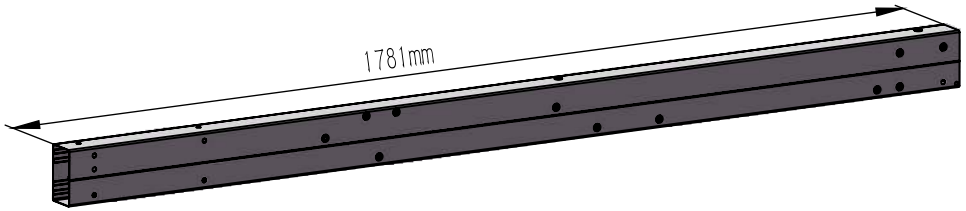

D1 1X

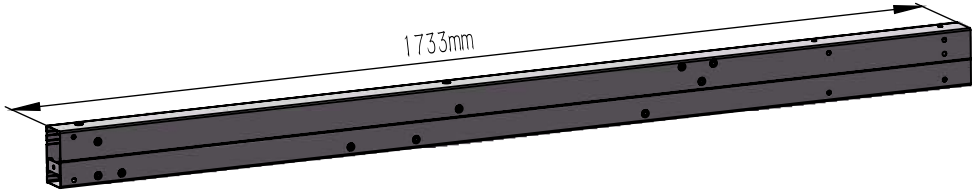

D2 1X

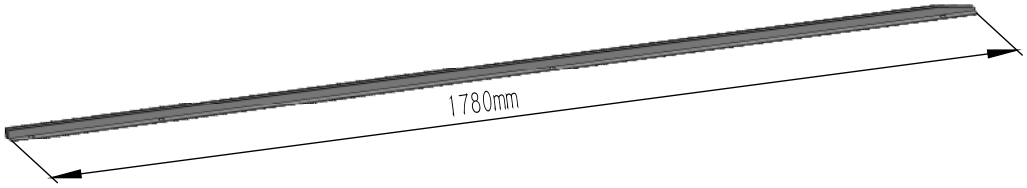

D_3 1X

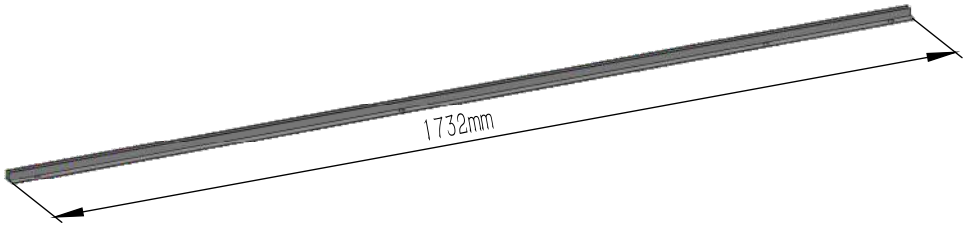

D_4 1X

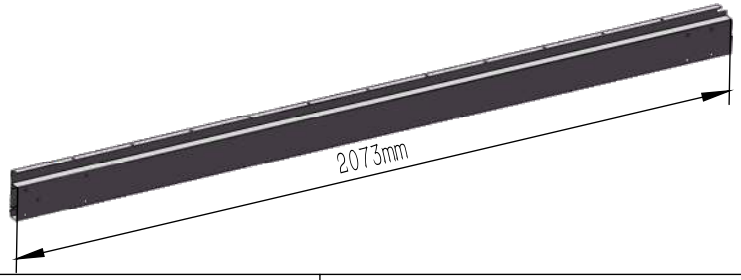

E_1 1X

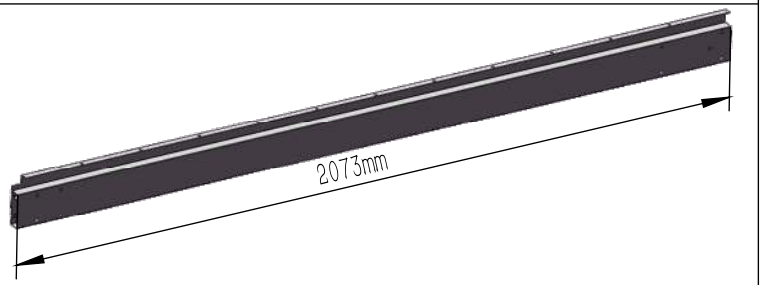

E_2 1X

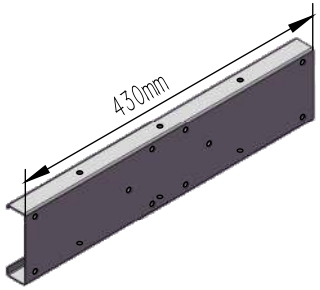

E_3 3X

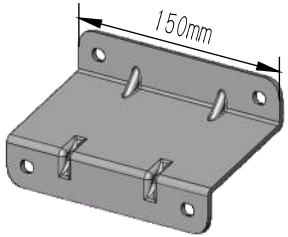

E_4 1X



E_5 2X

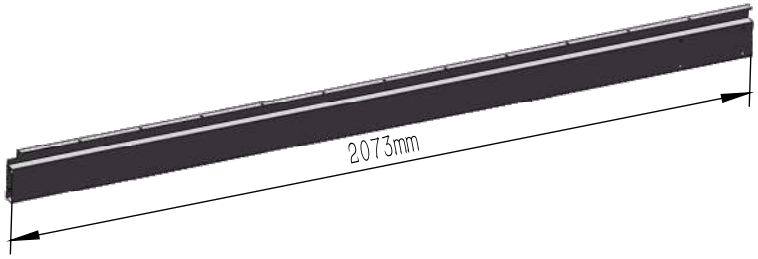

E_6 2X

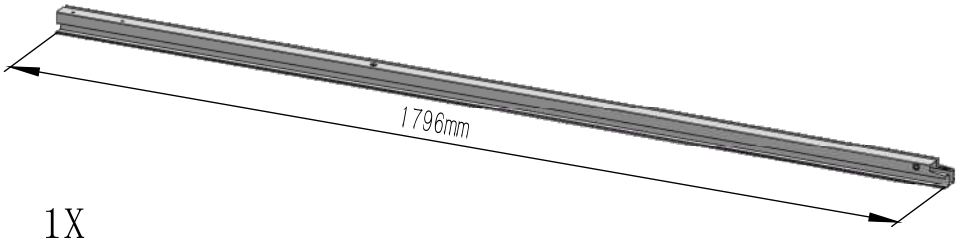

F_1 1X

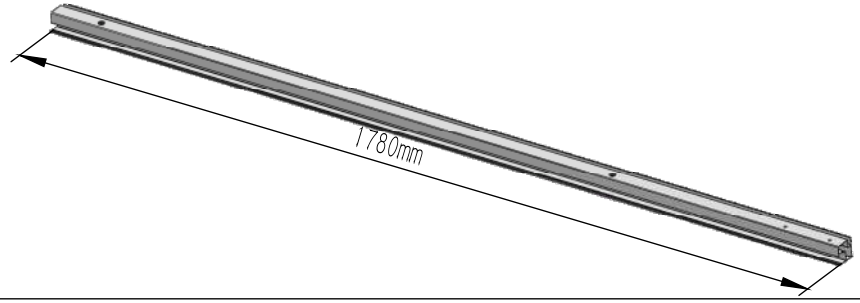

F_2 1X

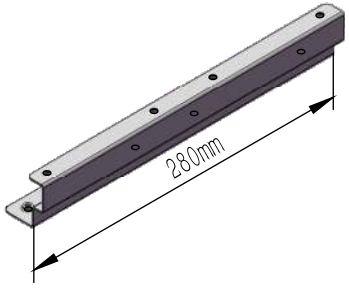

F_3 2X

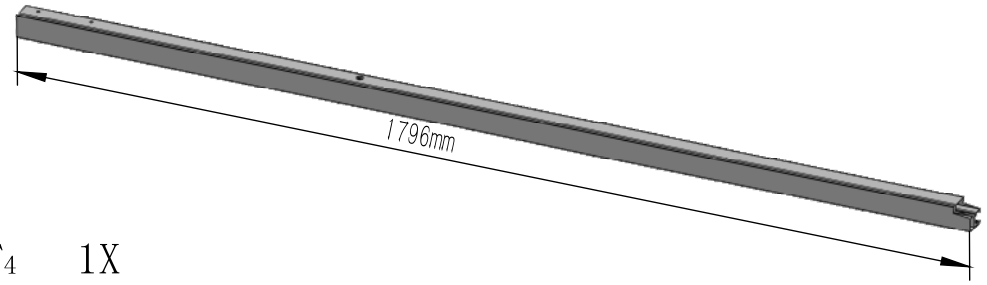

F_4 1X

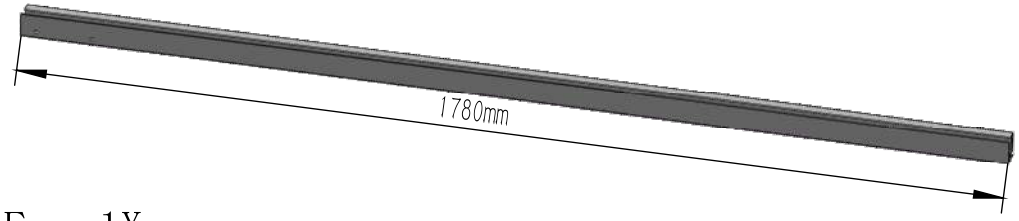

F_5 1X

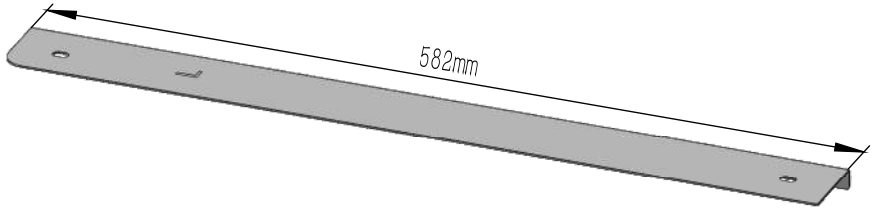

G_1 1X

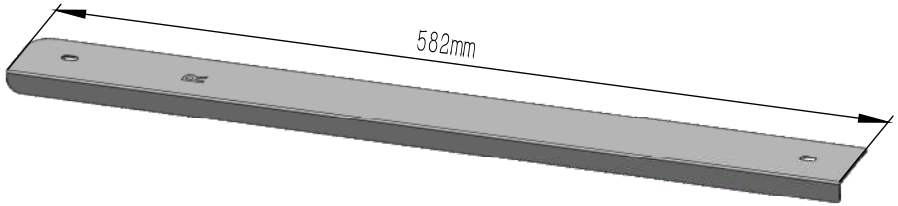

G_2 1X

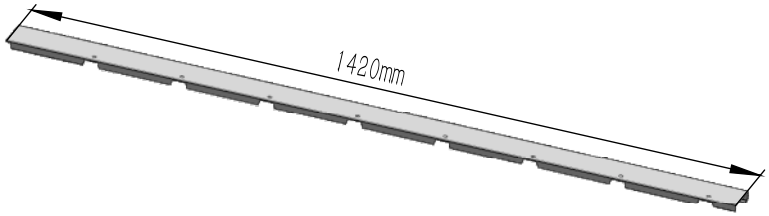

H_1 1X

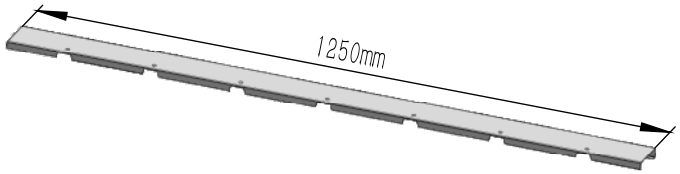

H_2 1X

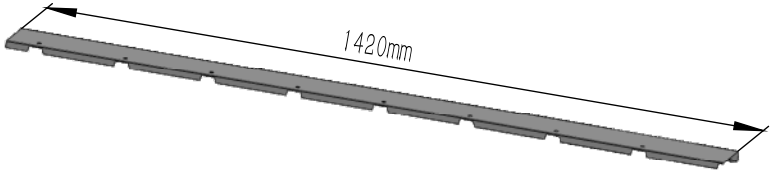

H_3 1X

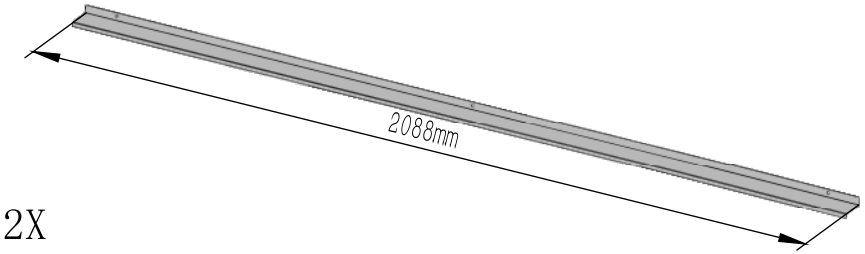

H_4 2X

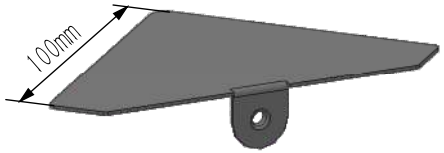

I_1 2X

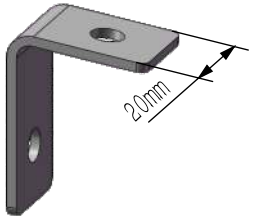

I_2 6X

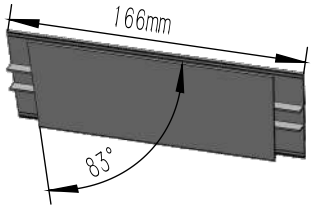

J_1 1X

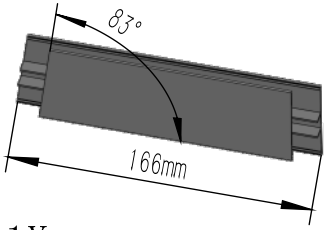

J_2 1X

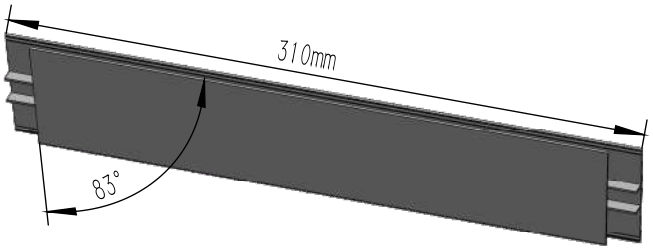

J3 1X

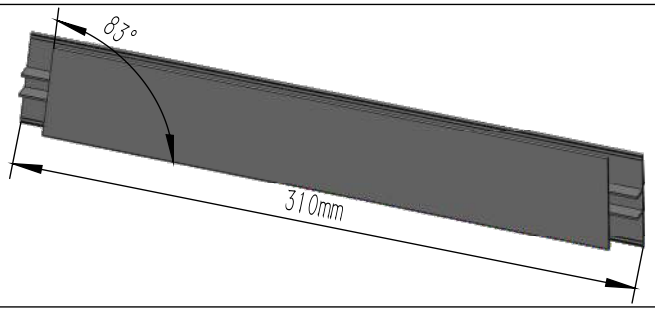

J4 1X

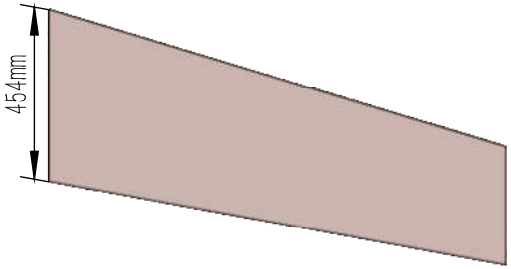

J5 1X

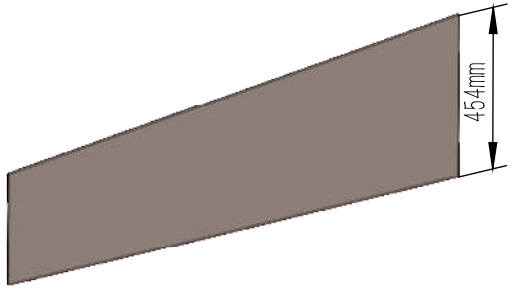

J6 1X

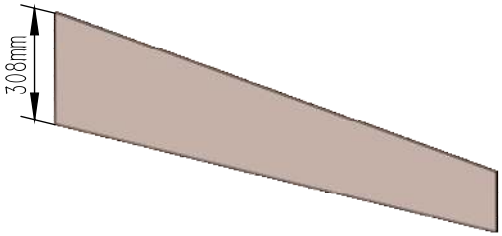

J7 1X

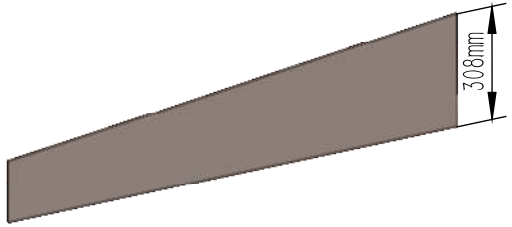

J8 1X

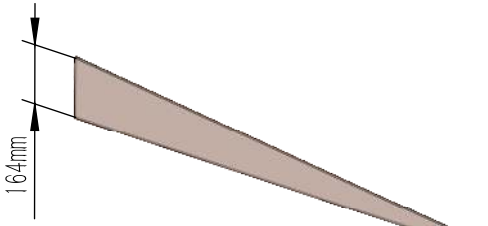

J9 1X

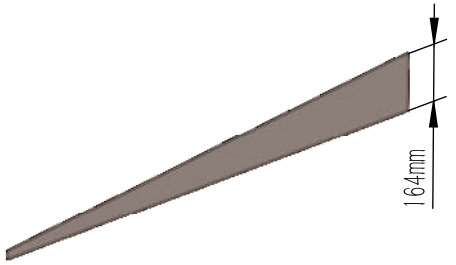

J10 1X

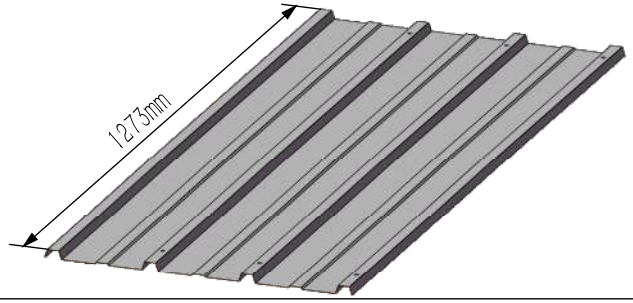

K1 6X

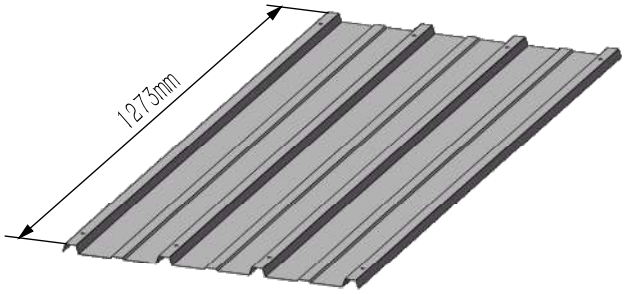

K2 18X

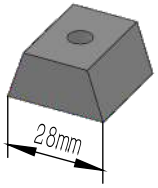

K_3 92X

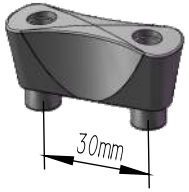

K_4 12X

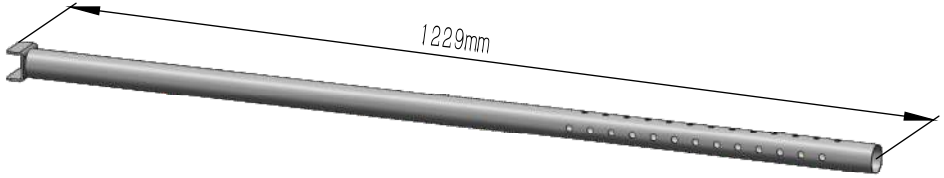

L_1 2X

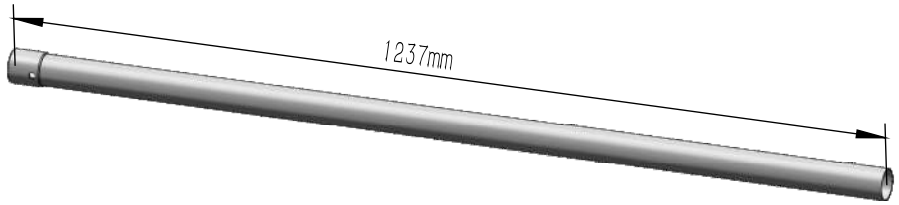

L_2 2X

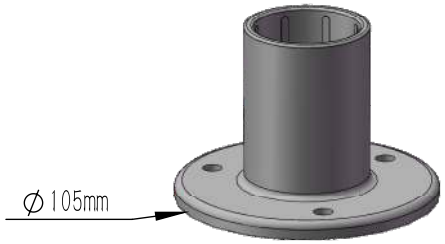

L_3 2X

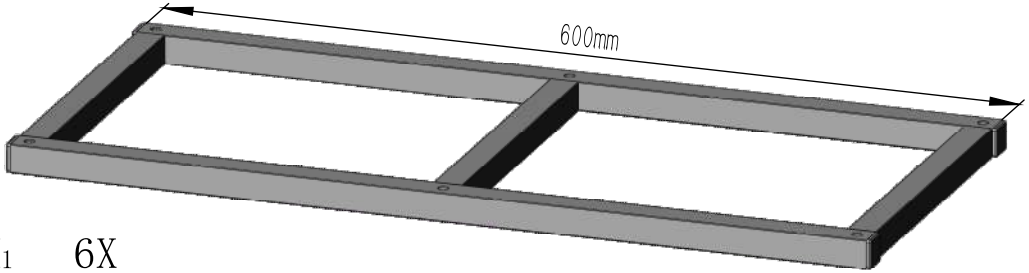

M_1 6X

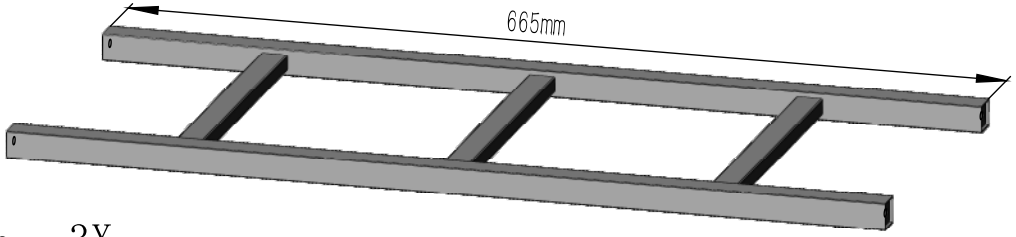

M_2 3X

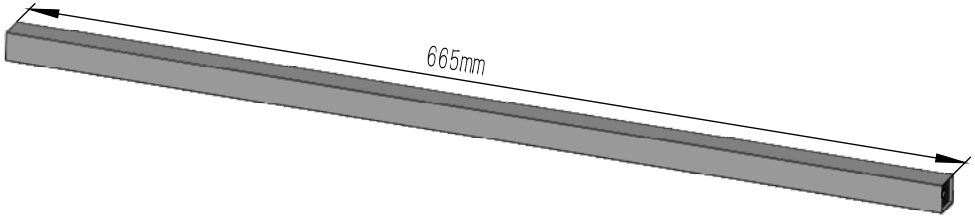

M_3 12X

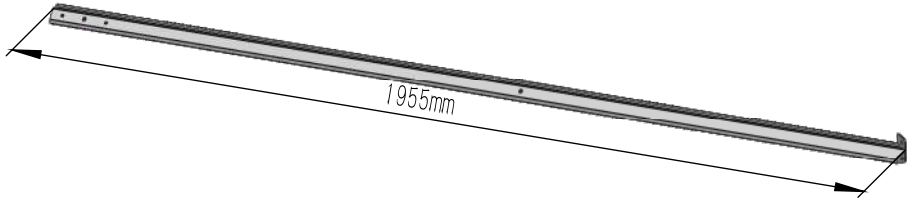

N_1 1X

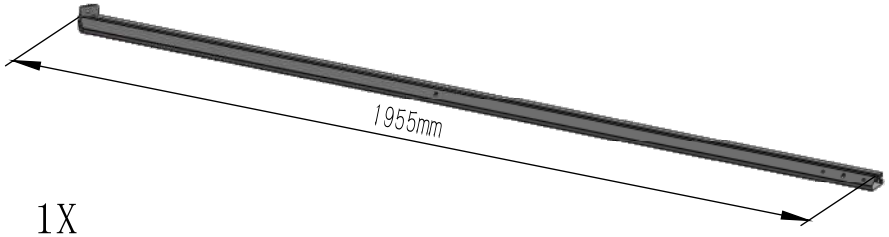

N_2 1X

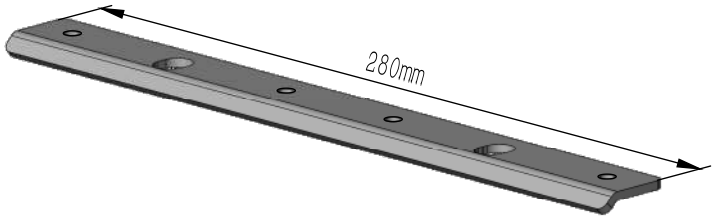

N_3 3X

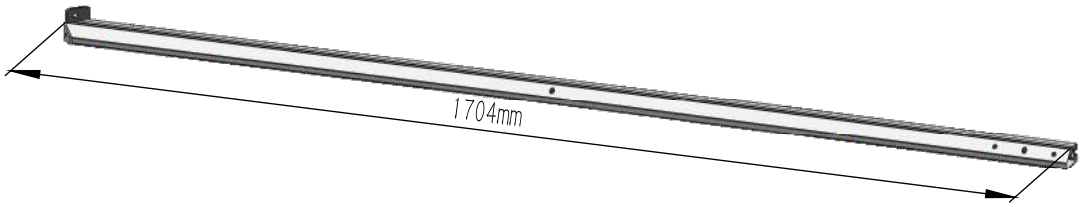

N4 1X

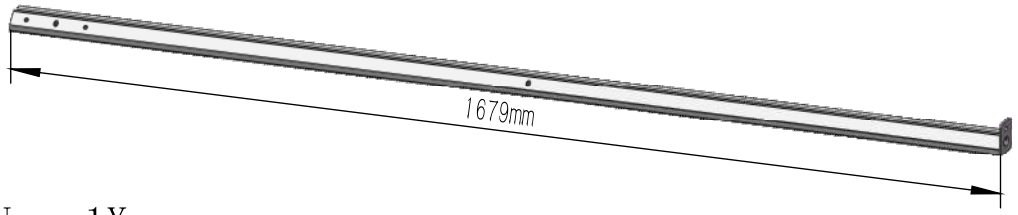

N5 1X

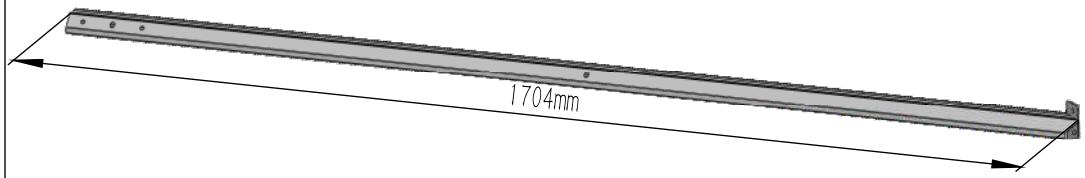

N6 1X

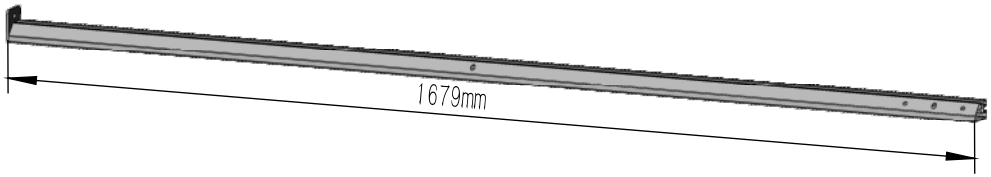

N7 1X



O1 4X

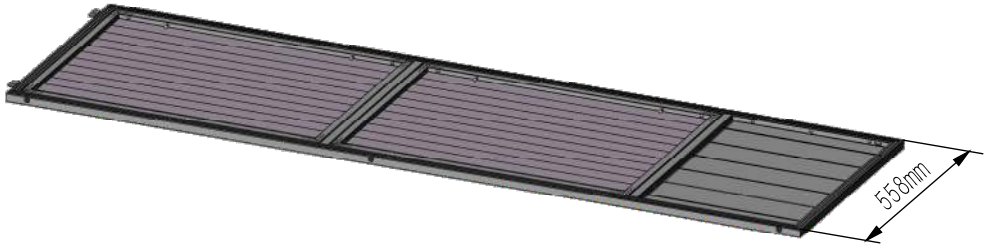

O2 4X



O3 2X



O4 2X

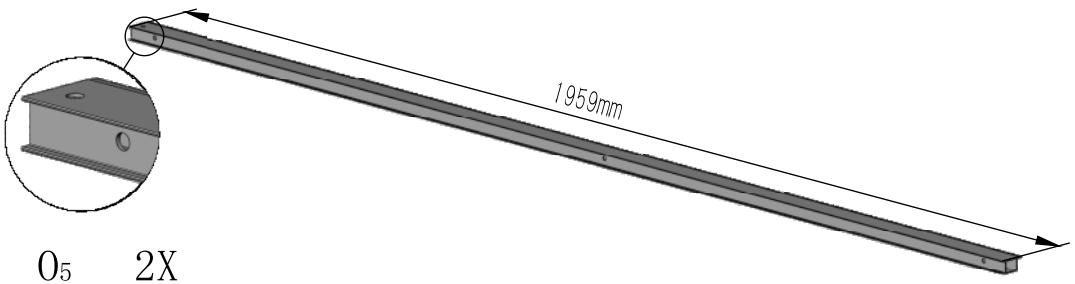

O5 2X

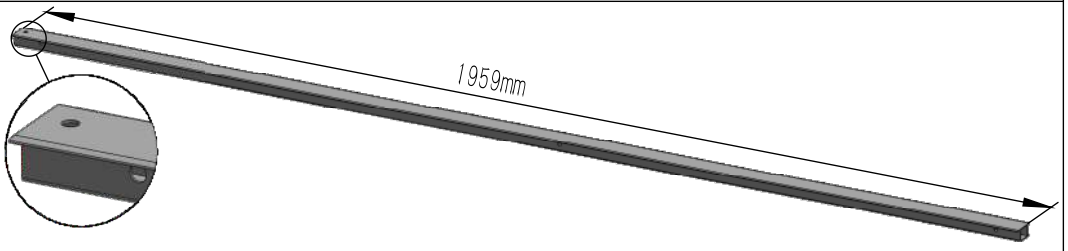

O6 2X

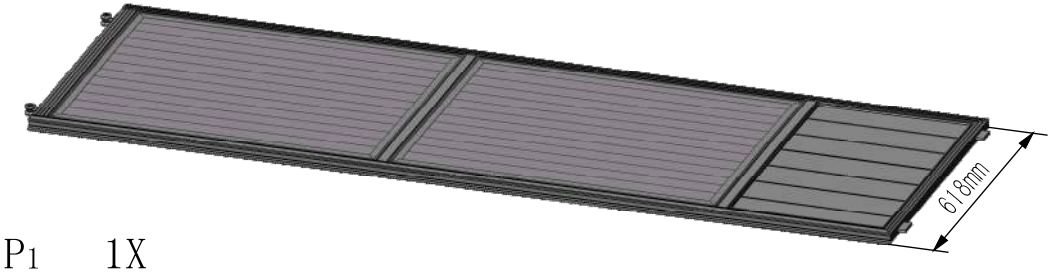

P1 1X



P2 1X

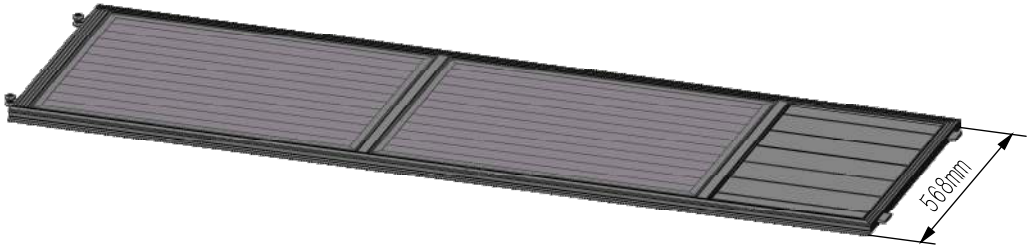

P3 2X



P4 2X

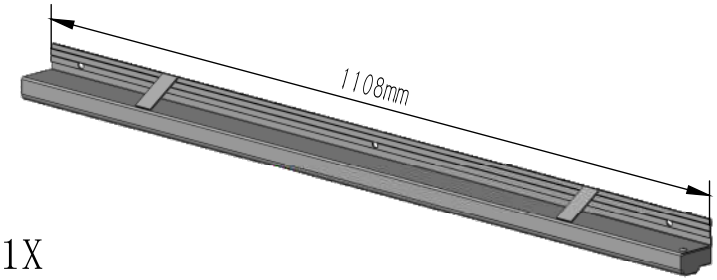

Q1 1X

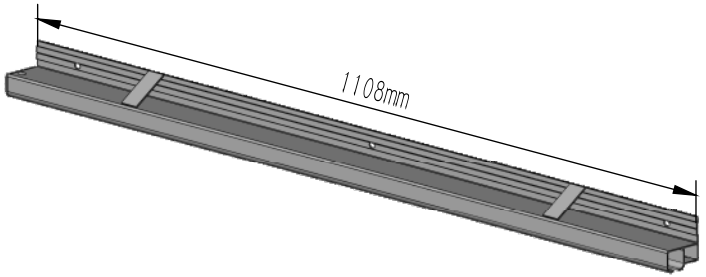

Q2 1X

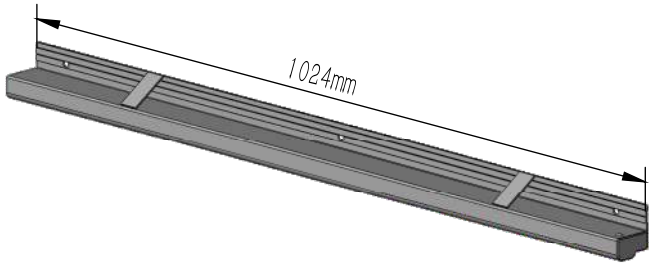

Q3 2X

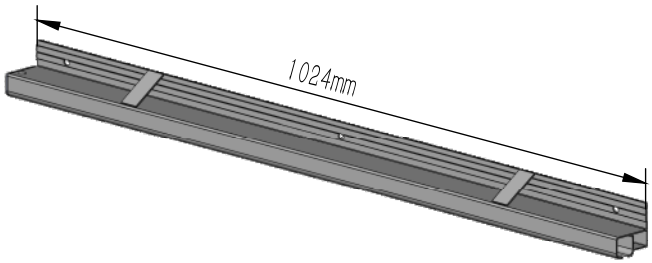

Q4 2X

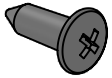 1# 6 ST4.8*13	 2# 4 ST5*16	 3# 17 M5*12
 4# 212 M6*16	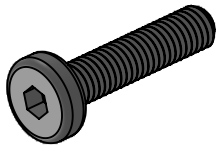 5# 28 M6*28	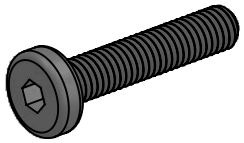 6# 128 M6*30
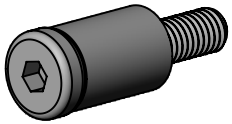 7# 2 M6*30	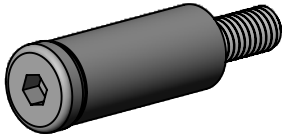 8# 8 M6*40	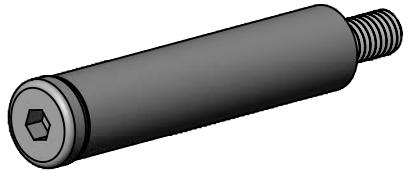 9# 6 M6*62
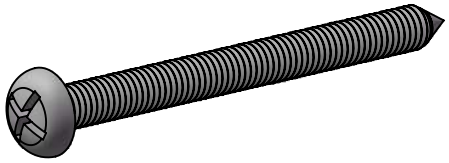 10# 14 ST6*70	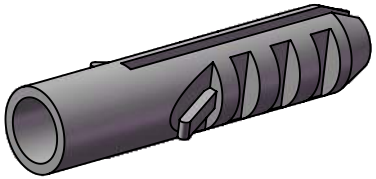 11# 14	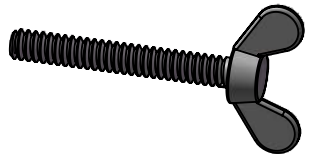 12# 2 M8*60
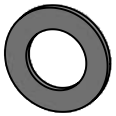 13# 2 M8	 14# 2 M8	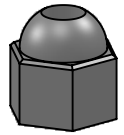 15# 92 M6

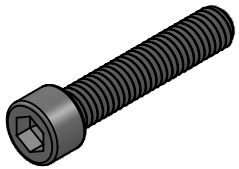 16# 36 M6*30	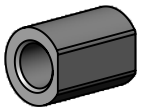 17# 36	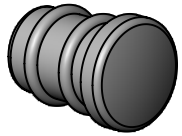 18# 24
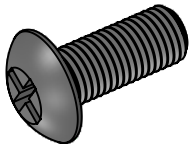 19# 24 M4*10	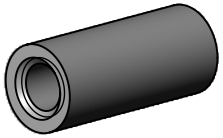 20# 12 M4	 21# 28 Metal Square Nuts M6
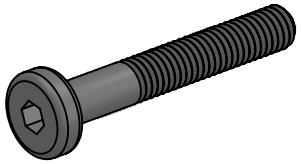 22# 12 M6*40	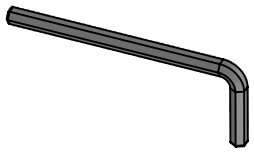 23# 1 S4	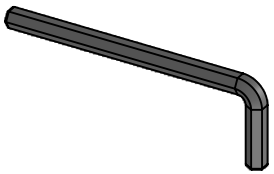 24# 1 S5
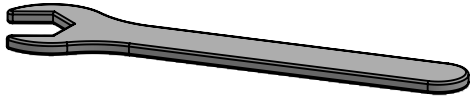 25# 1 S13	 Plastic Gaskets 26# 92 D12/d6.2*H2	 27# 6
 28# 2		

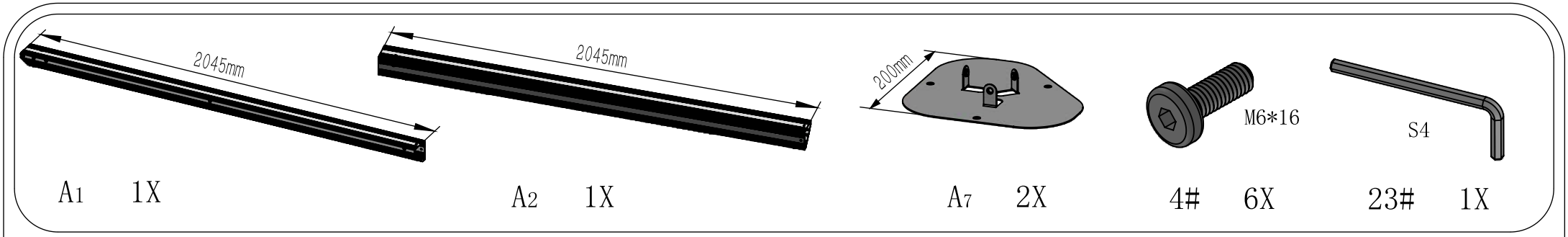

A1 1X

A2 1X

A7 2X

4# 6X

23# 1X

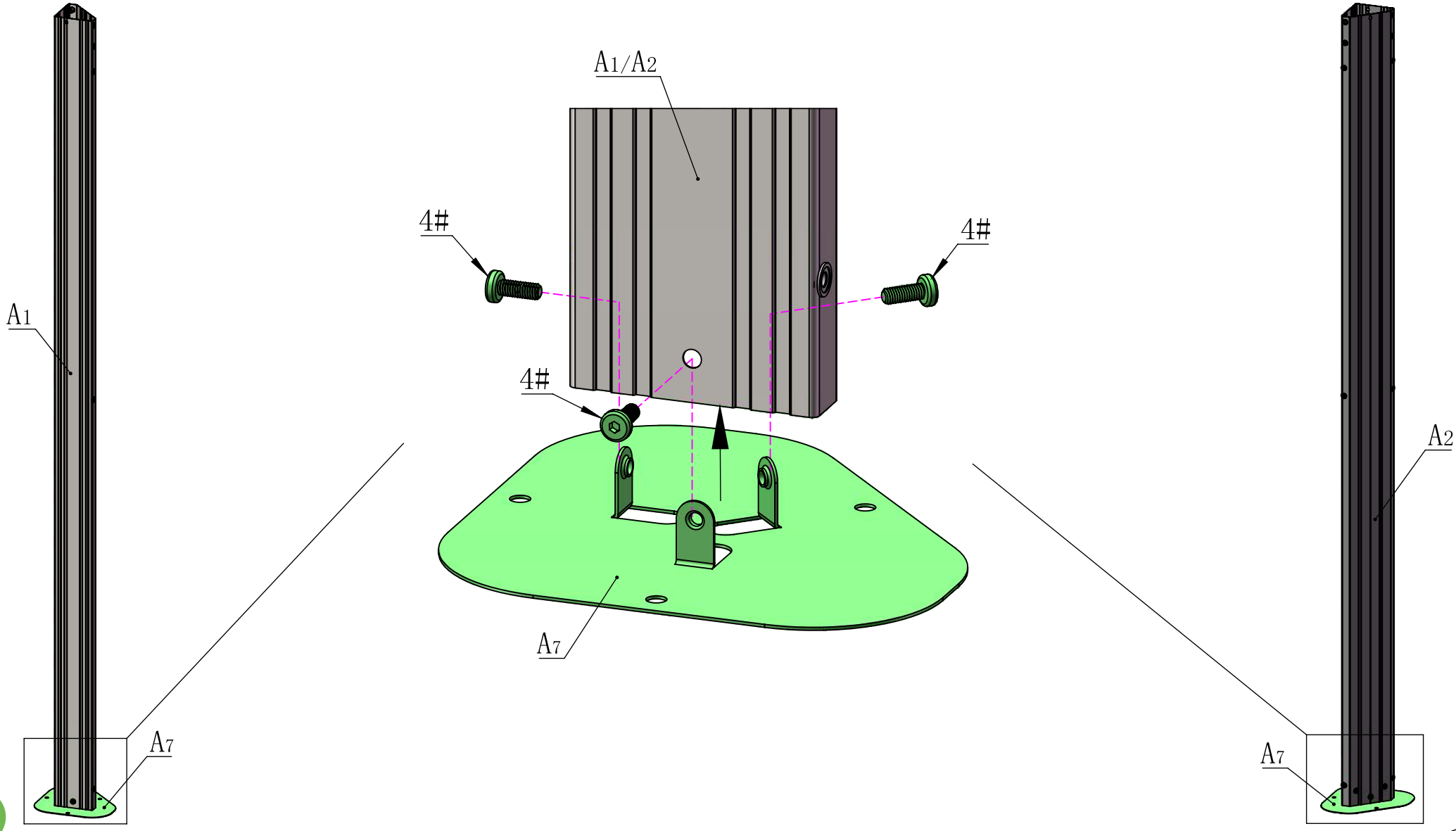

1

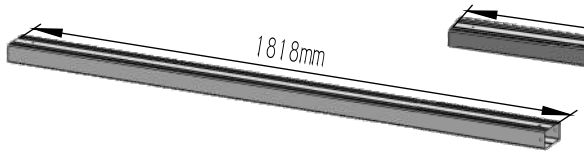

A3 1X

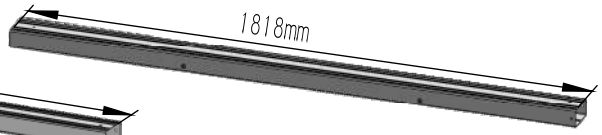

A4 1X

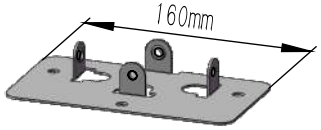

A8 2X



4# 6X

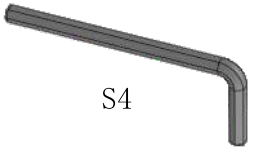

23# 1X

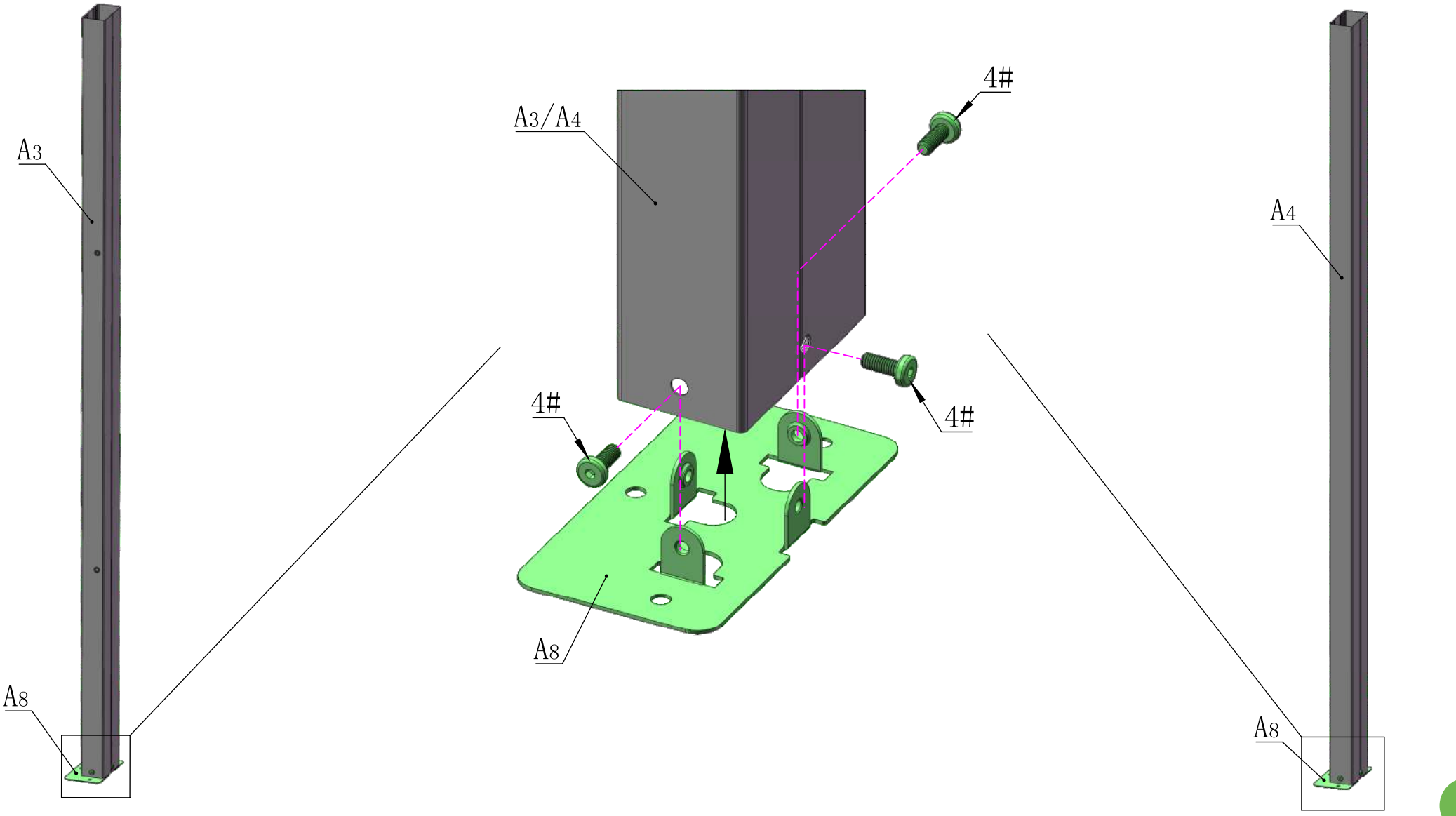

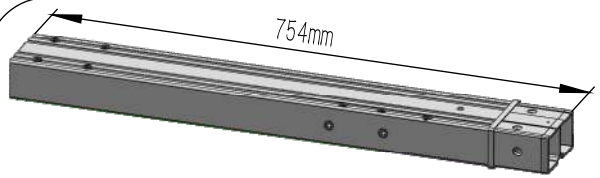

A5 1X

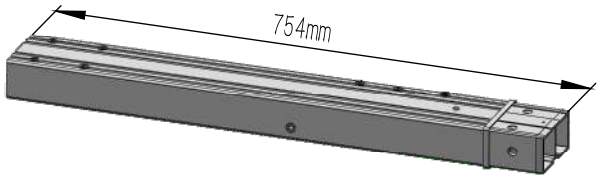

A6 1X



ST5*16

2# 4X

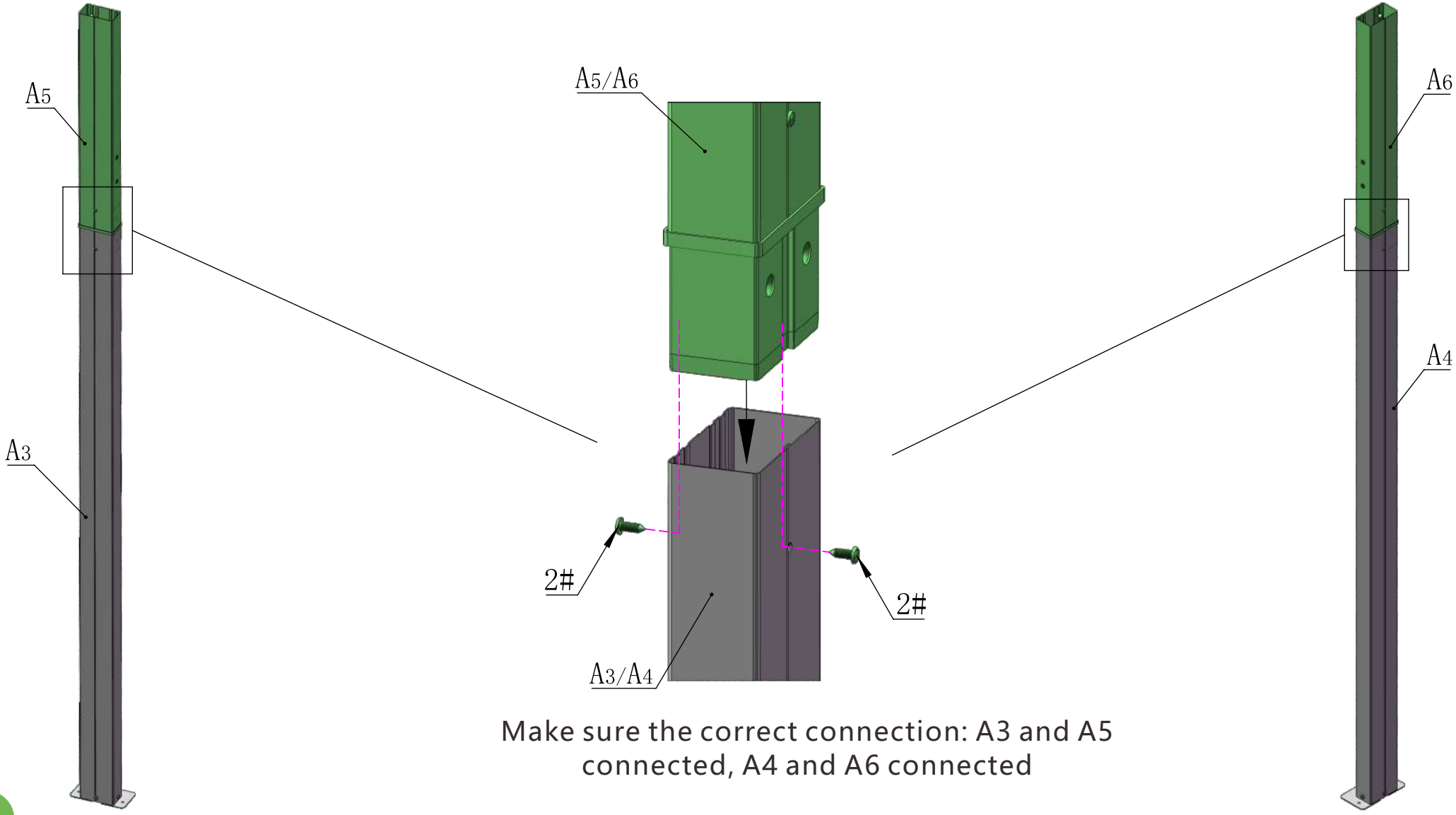

Make sure the correct connection: A3 and A5 connected, A4 and A6 connected

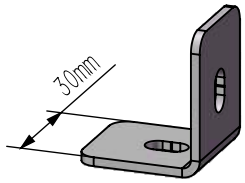

A9 6X

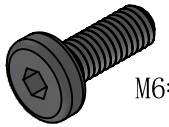

4# 6X

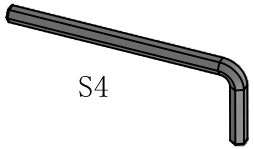

23# 1X

You can assemble only 2 pieces for each post according to the actual installation situation.

The bracket #A9 is used to fox the post against the wall. If you don't need it fixed, please retain for future use and skip this step.

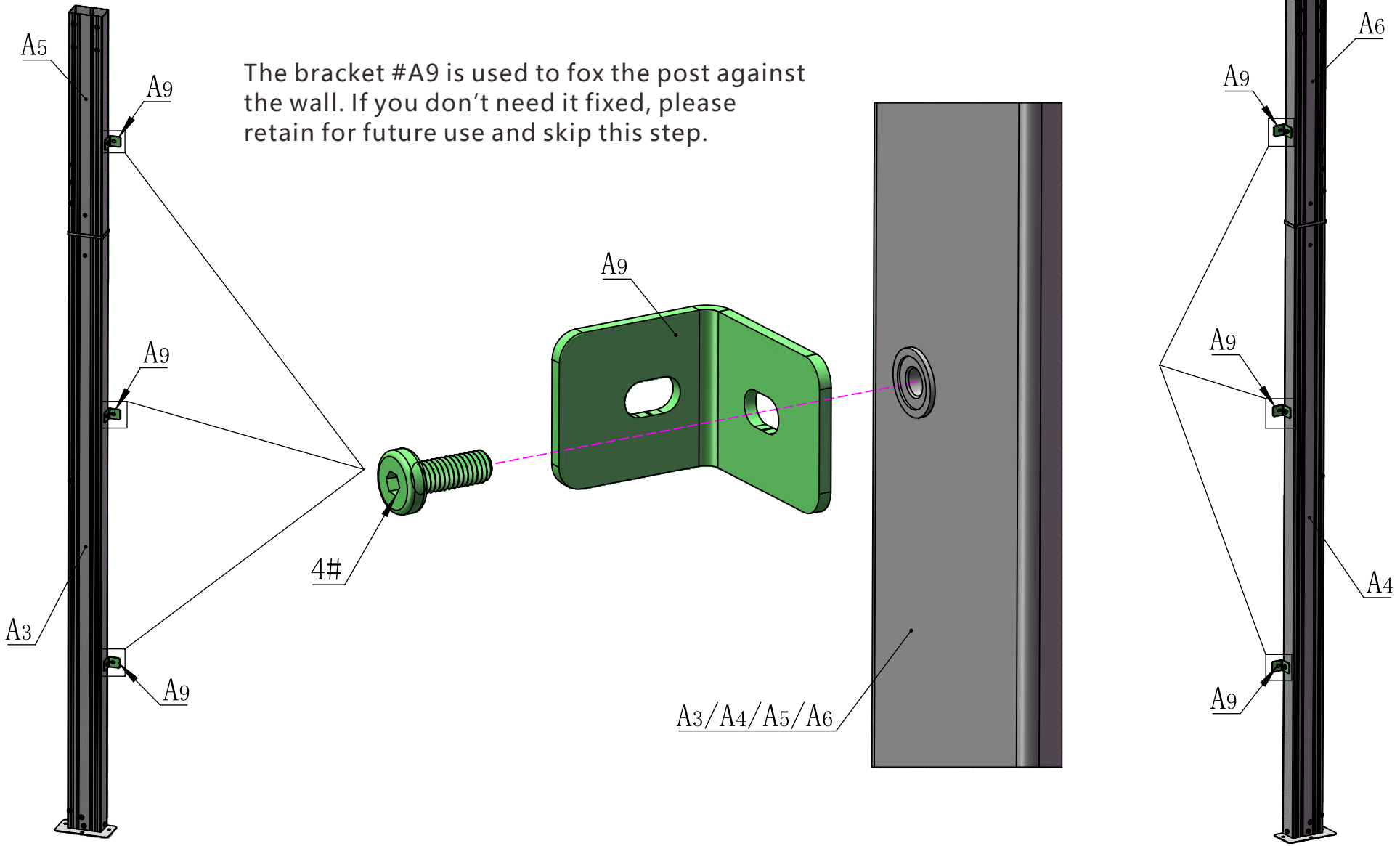

Front Beam Assembly

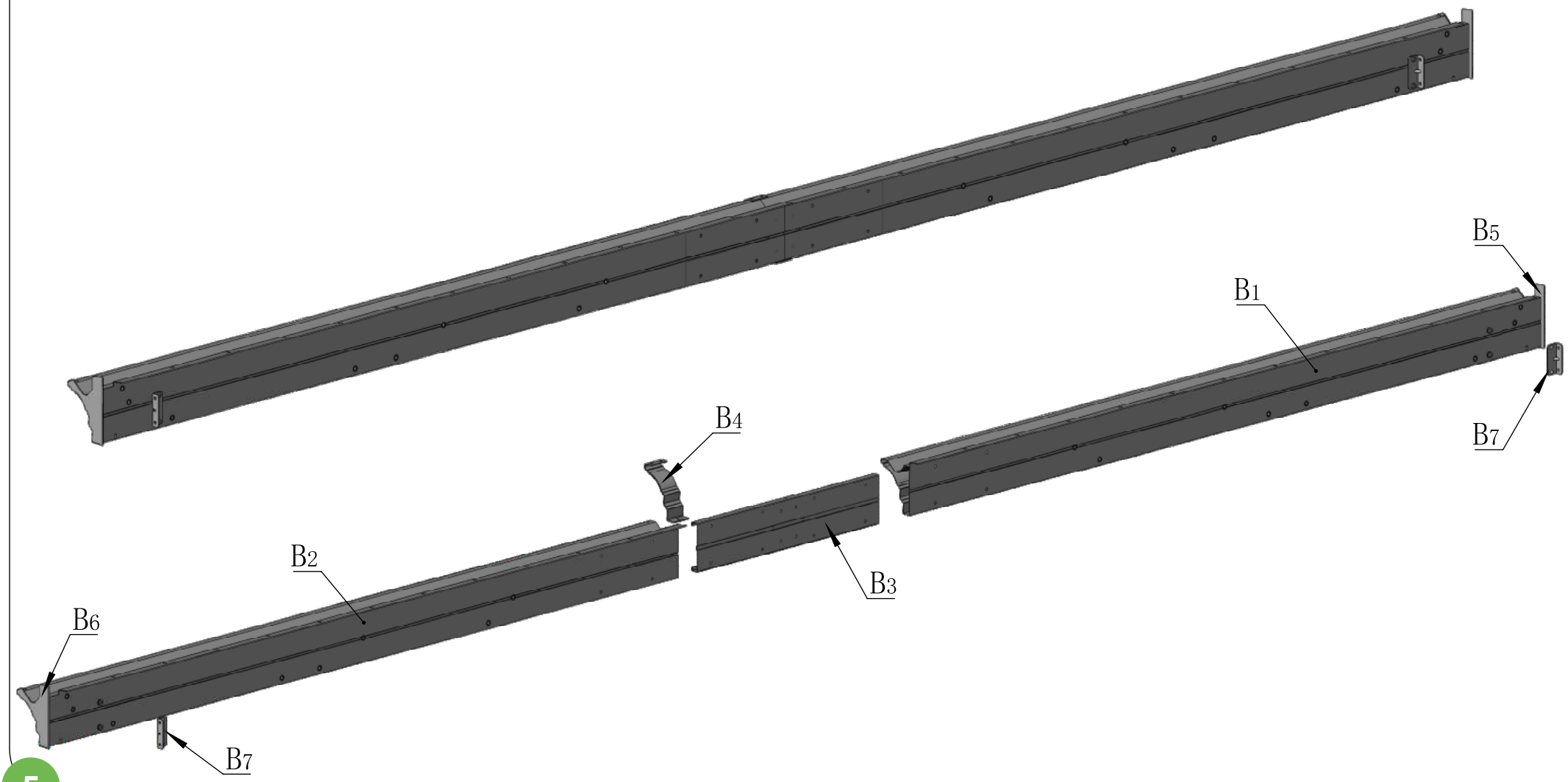

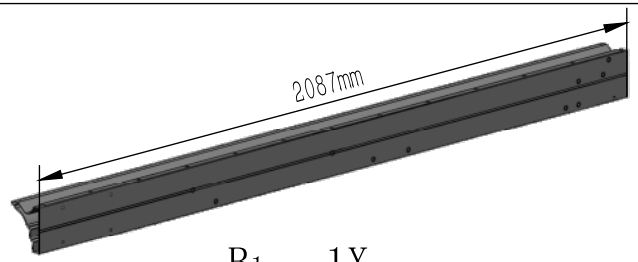

B1 1X

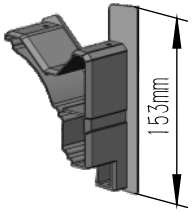

B5 1X

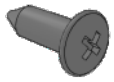

ST4.8*13

1# 2X

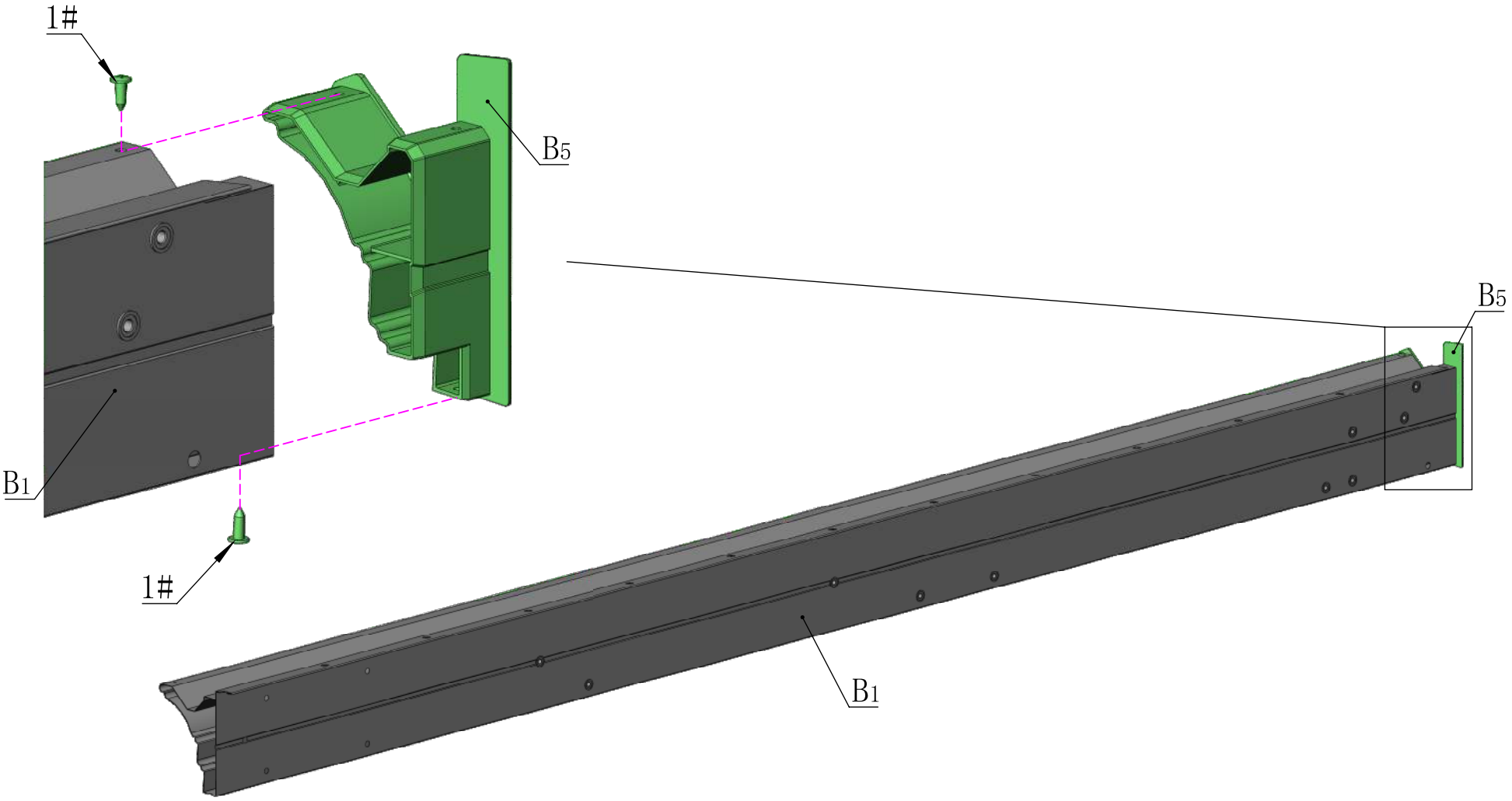

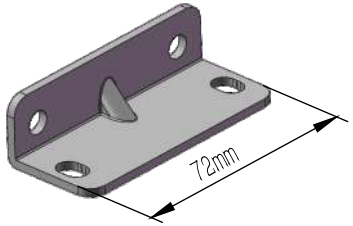

B7 1X



4# 2X

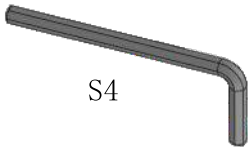

23# 1X

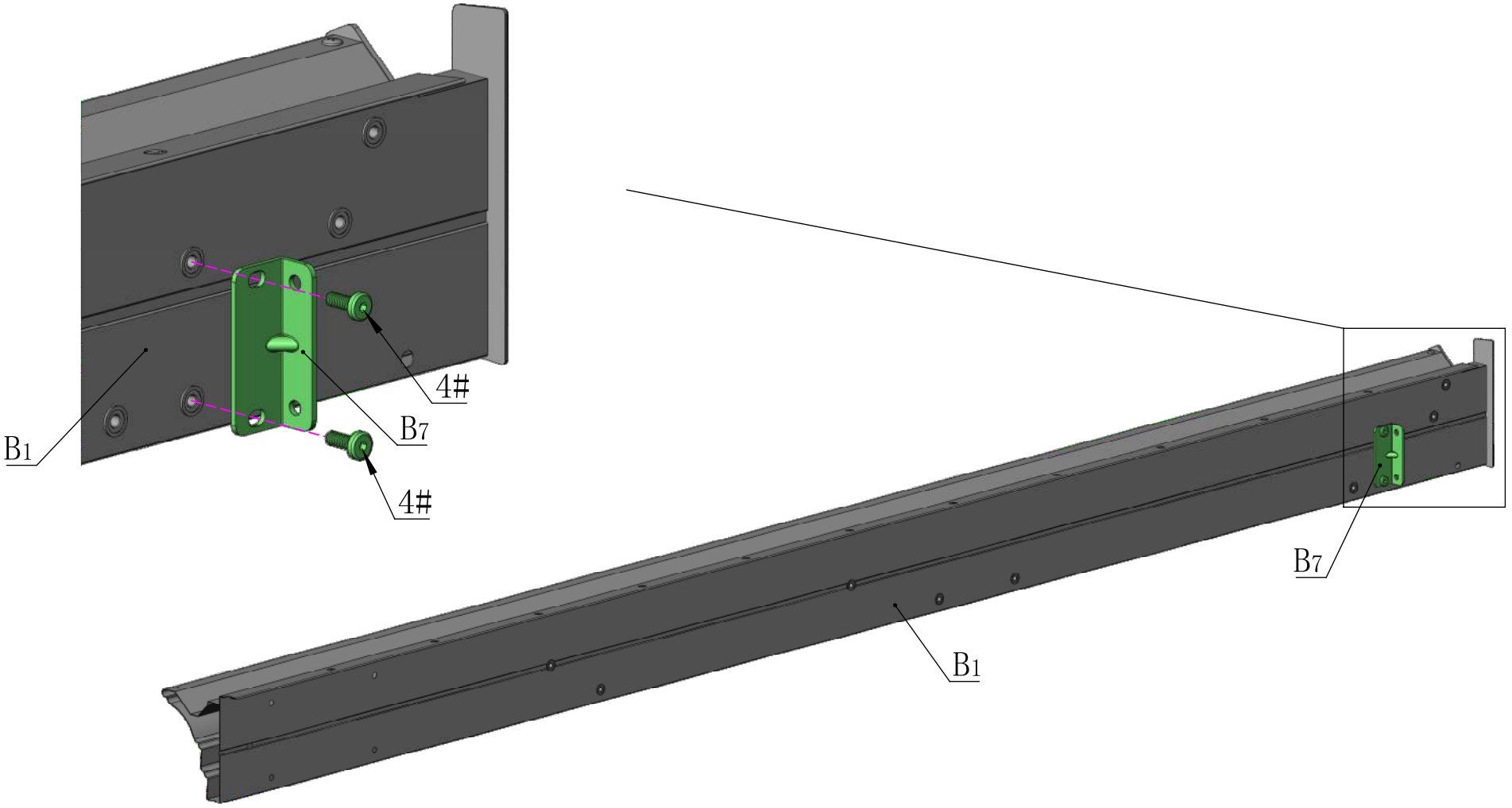

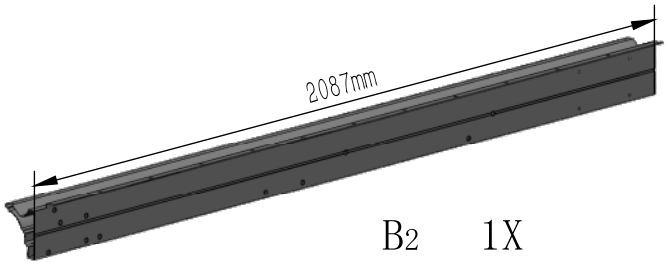

B2 1X

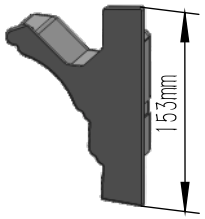

B6 1X



ST4.8*13

1# 2X

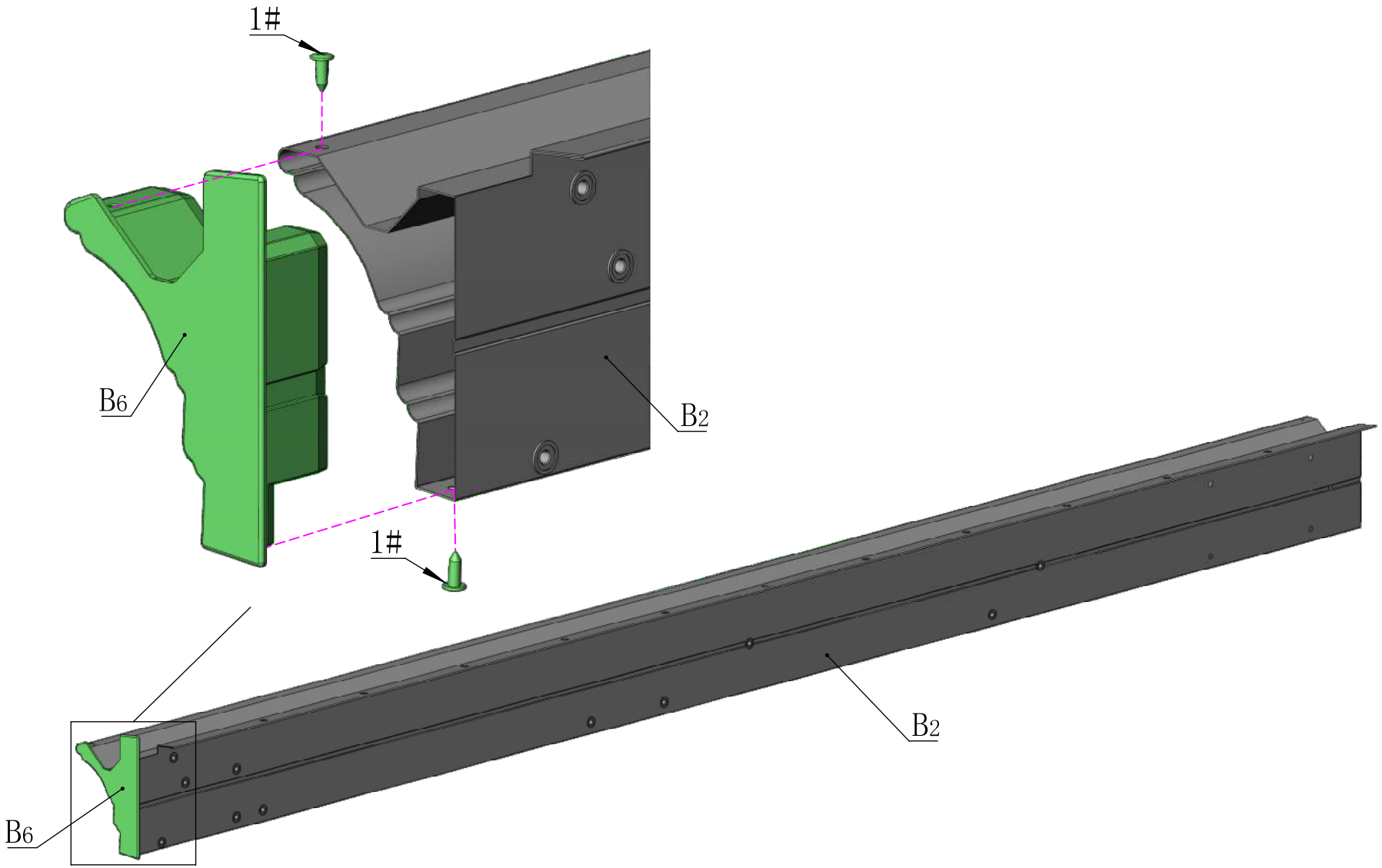

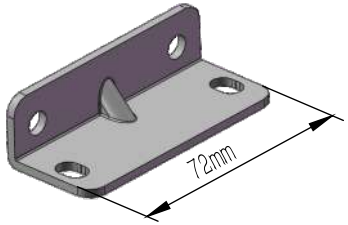

B7 1X

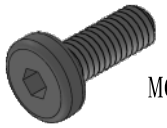

4# 2X

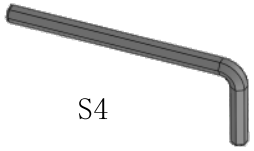

23# 1X

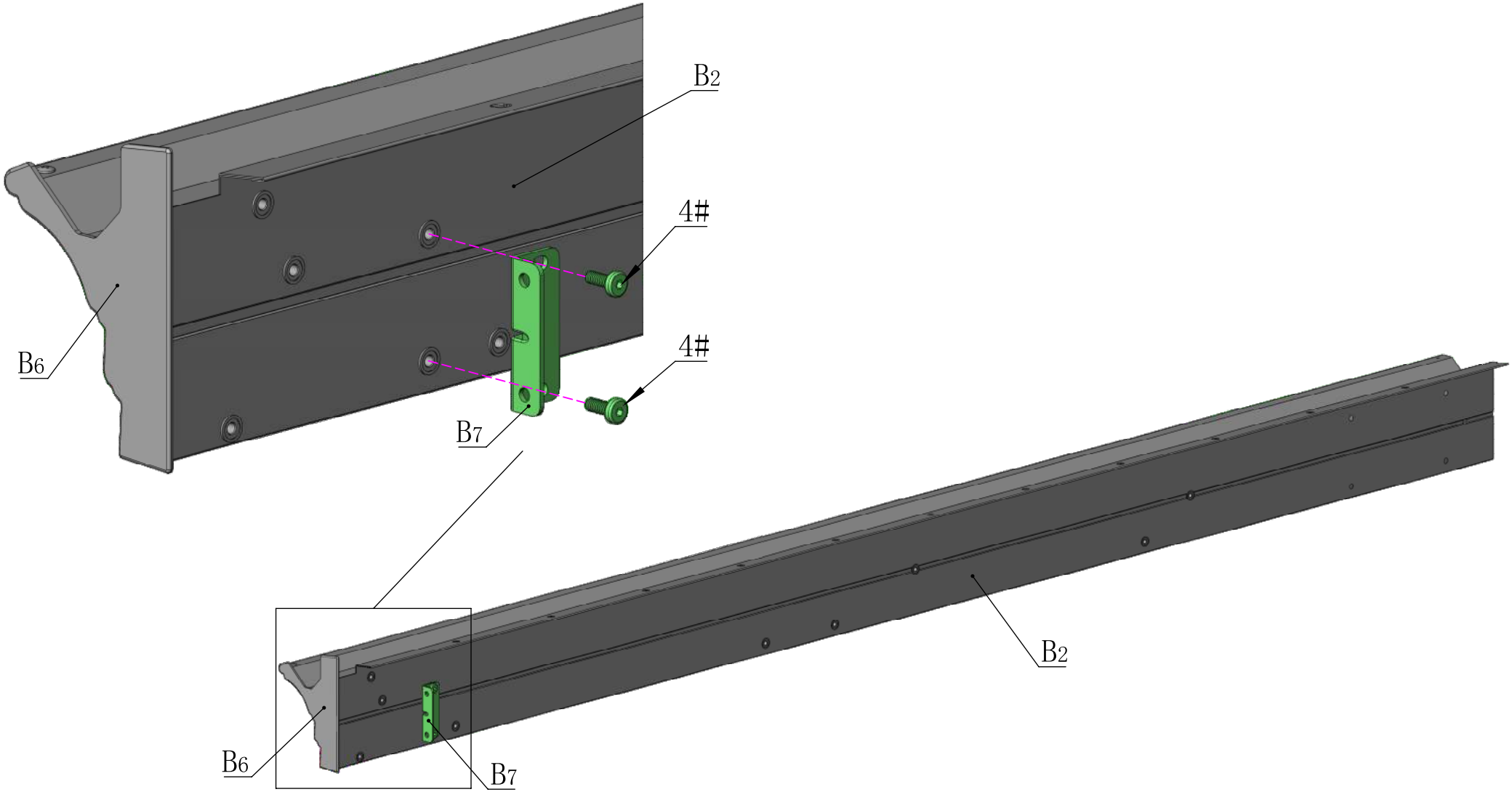

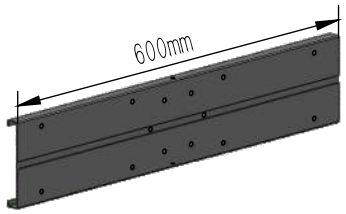

B3 1X

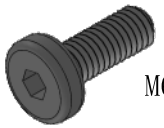

4# 8X

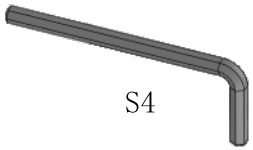

23# 1X

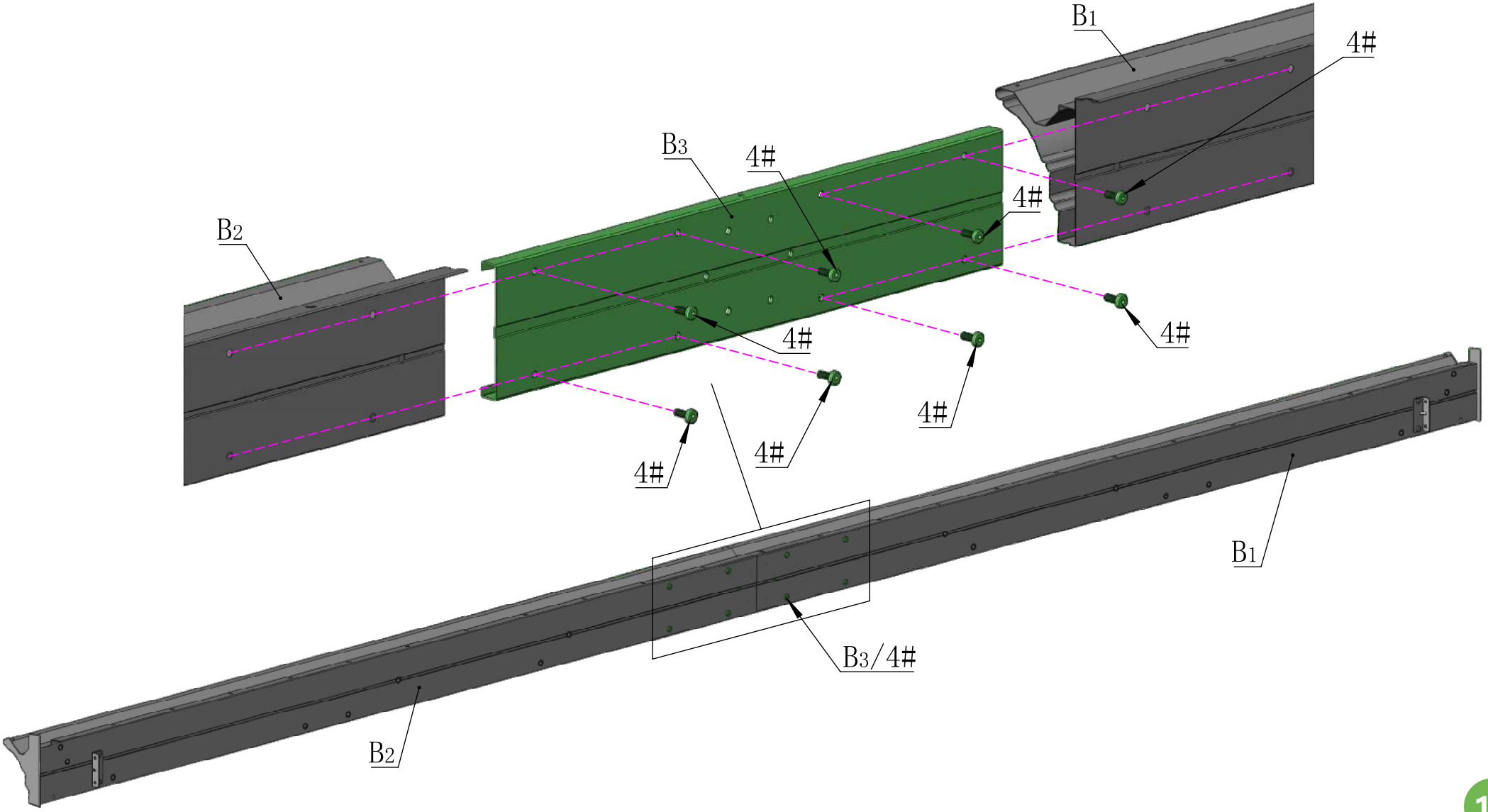

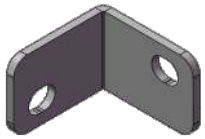

B8 1X

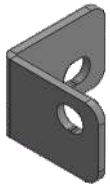

B9 1X



4# 2X

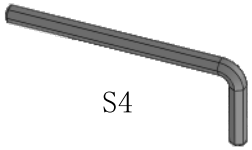

23# 1X

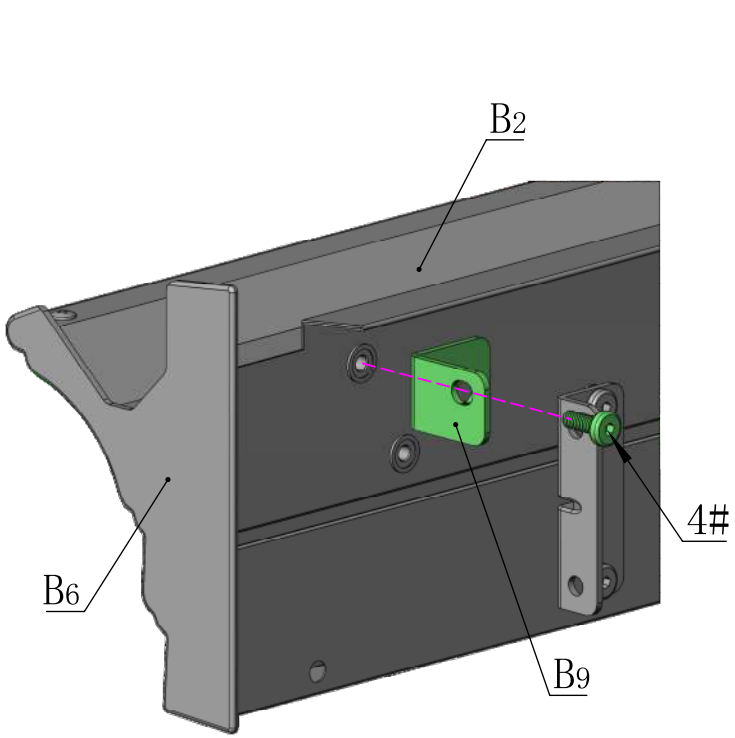

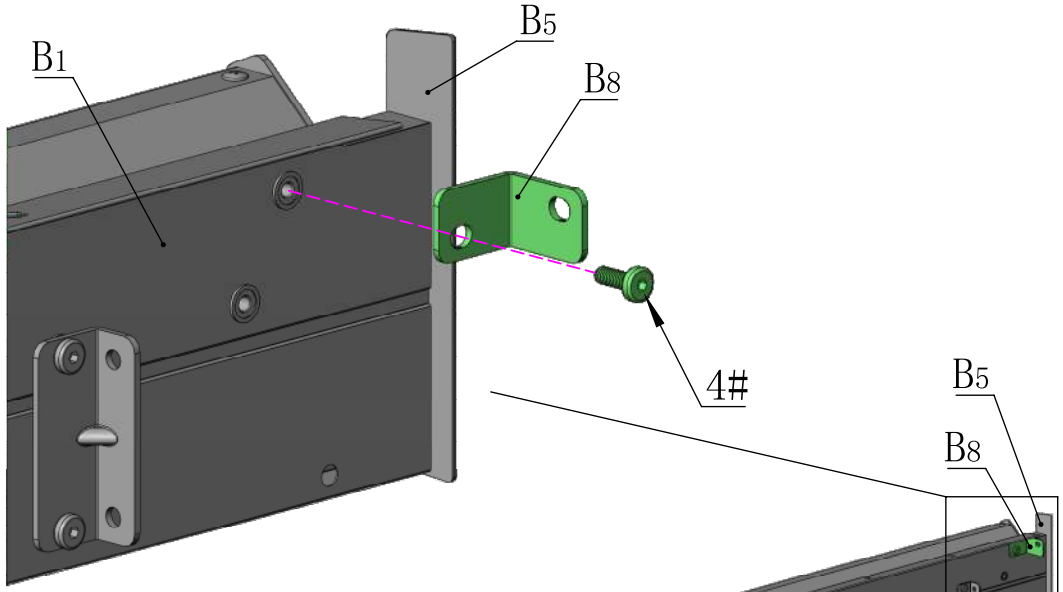

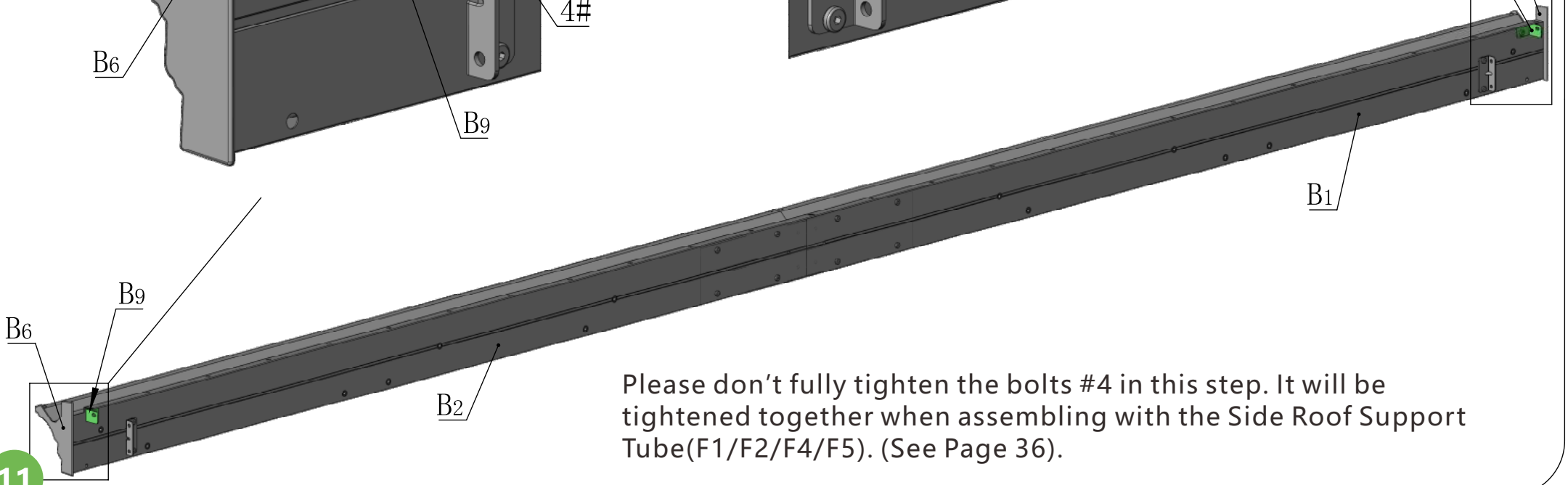

Please don't fully tighten the bolts #4 in this step. It will be tightened together when assembling with the Side Roof Support Tube(F1/F2/F4/F5). (See Page 36).



28# 1X

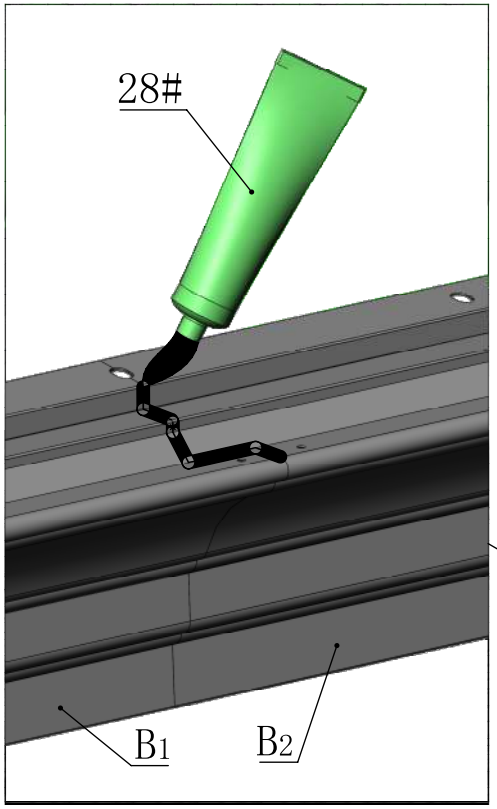

Use silicone sealant(part #28) to affix the gap between the two beams.

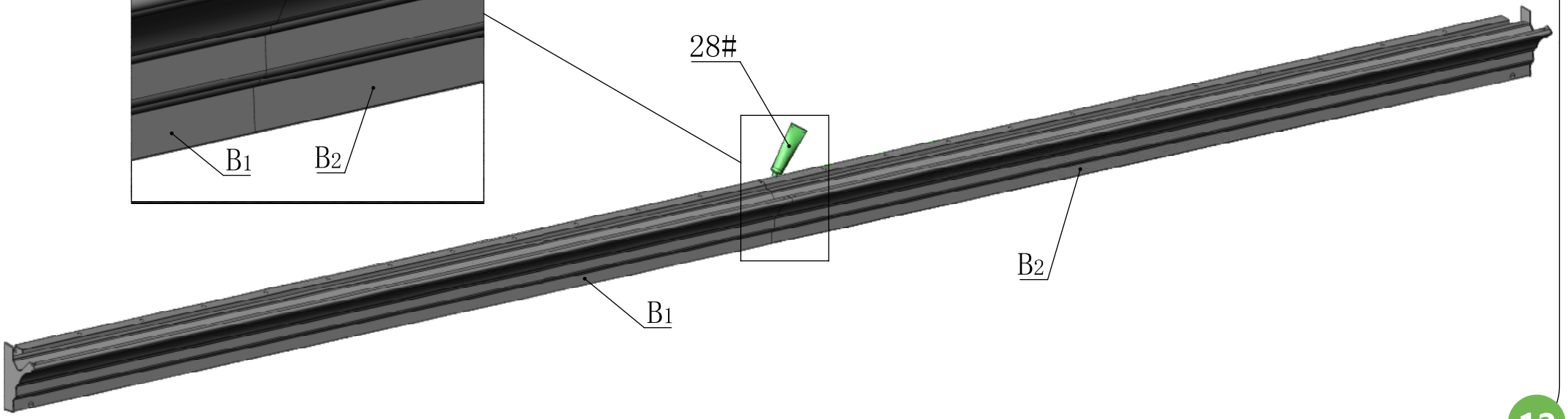

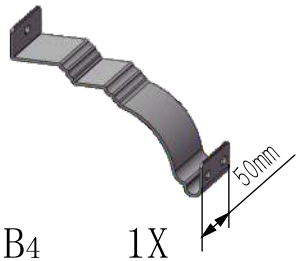

B4 1X



ST4.8*13 1# 2X



M5*12 3# 1X

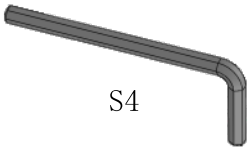

S4 23# 1X

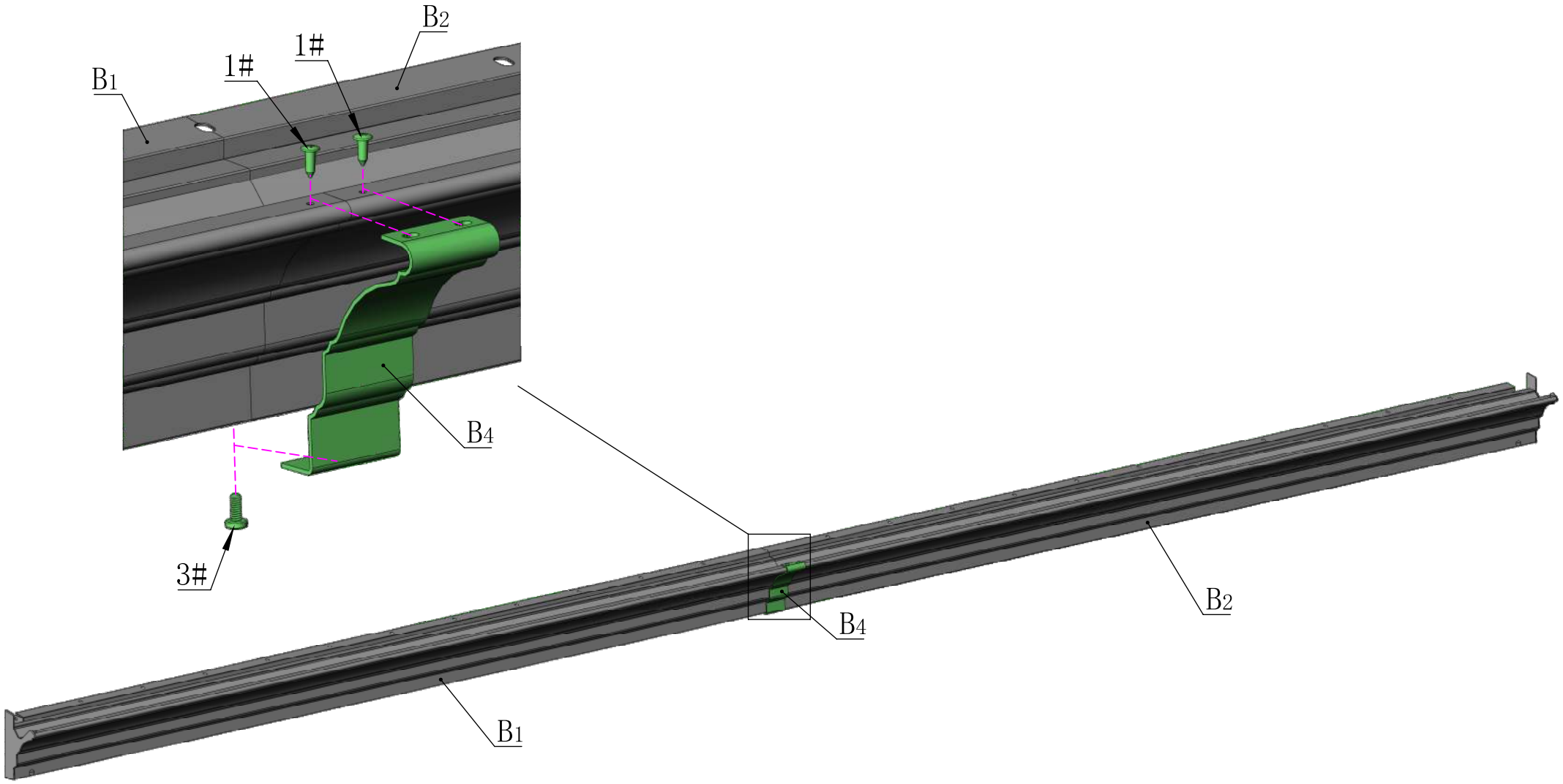

Side Beam Assembly

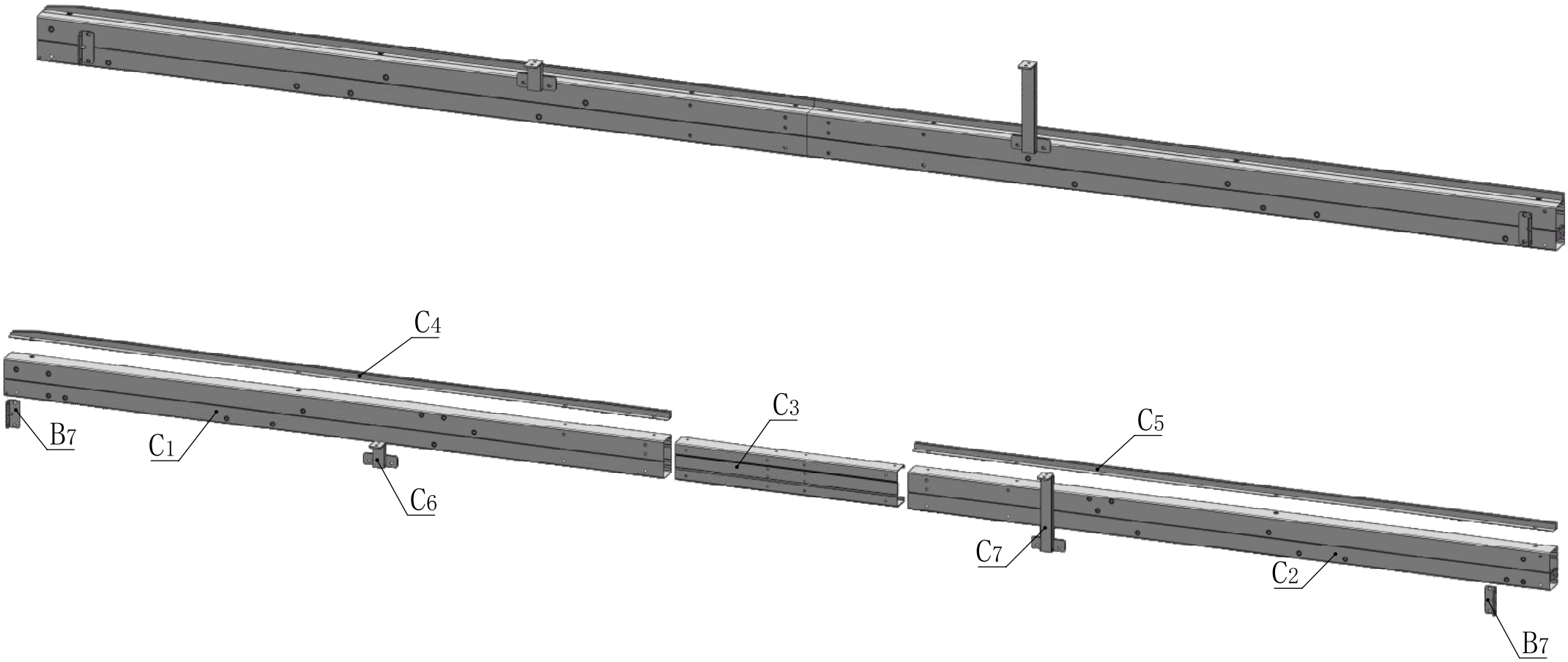

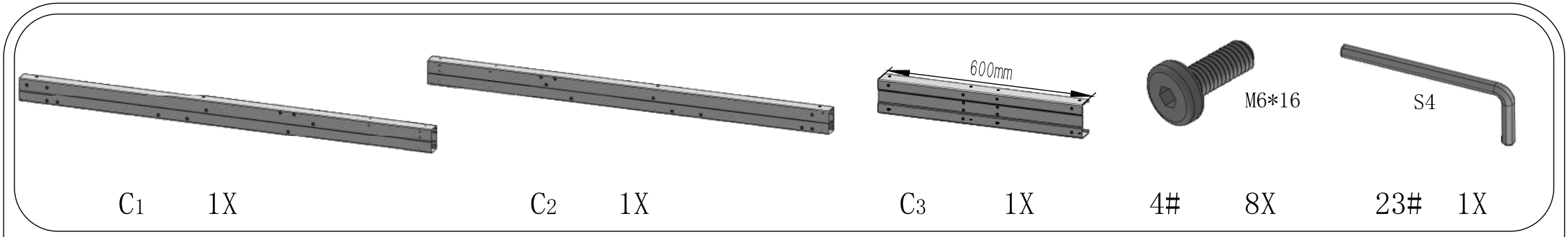

C1 1X C2 1X C3 1X 4# 8X 23# 1X

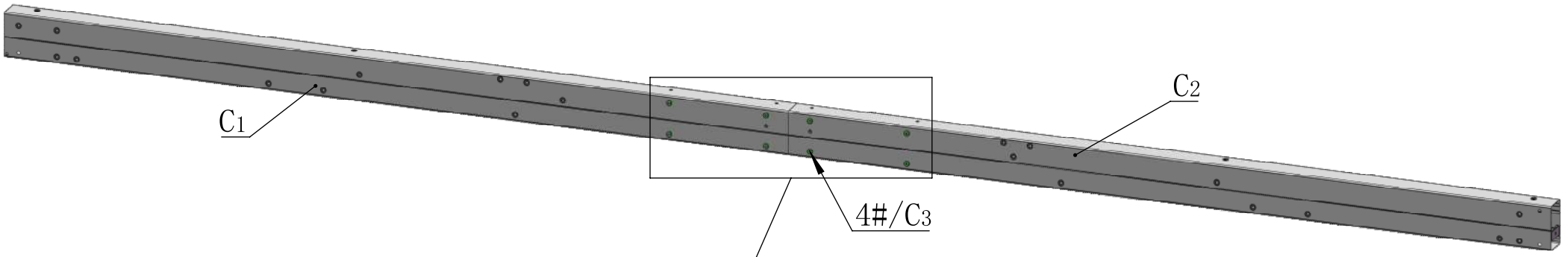

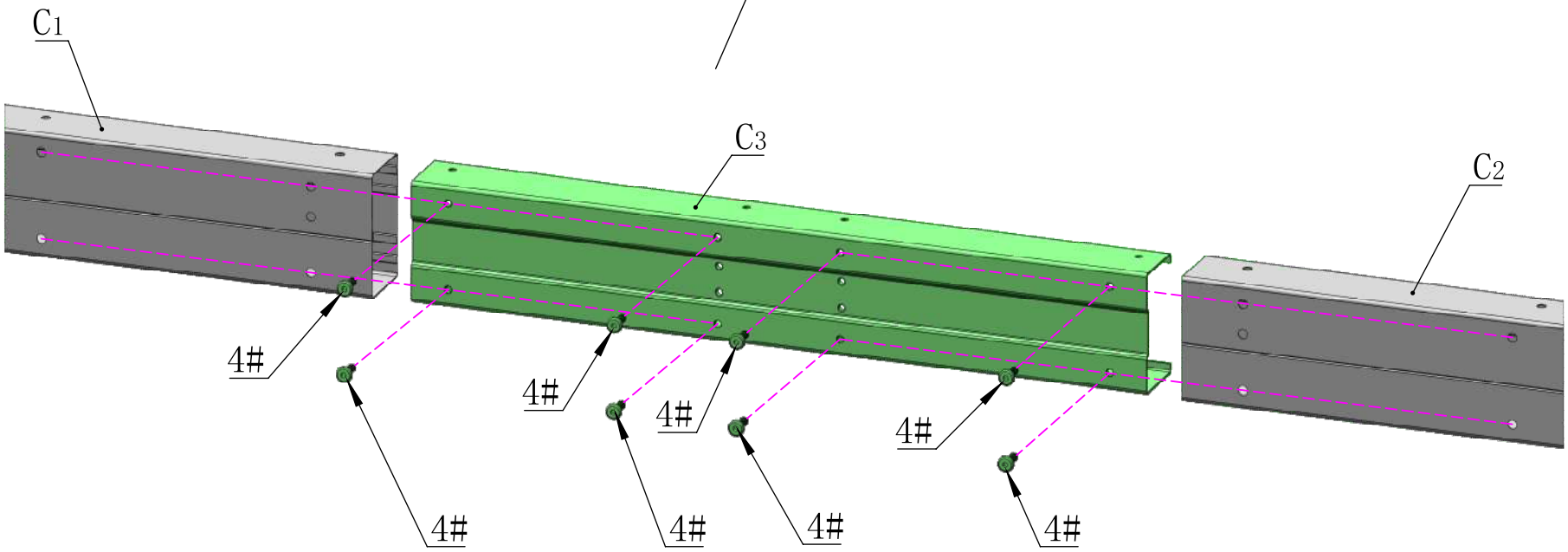

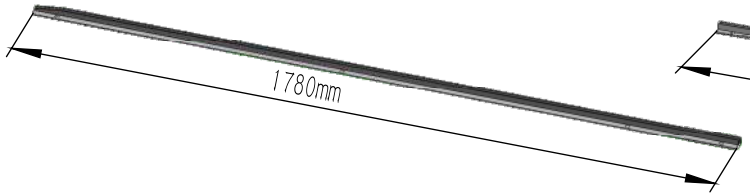

C4 1X

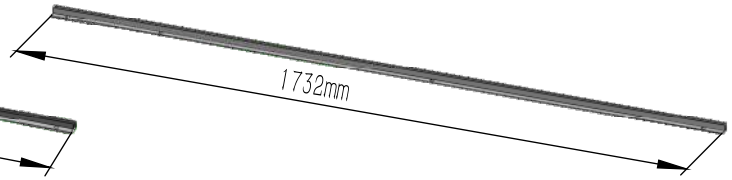

C5 1X



4# 8X

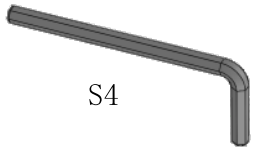

23# 1X

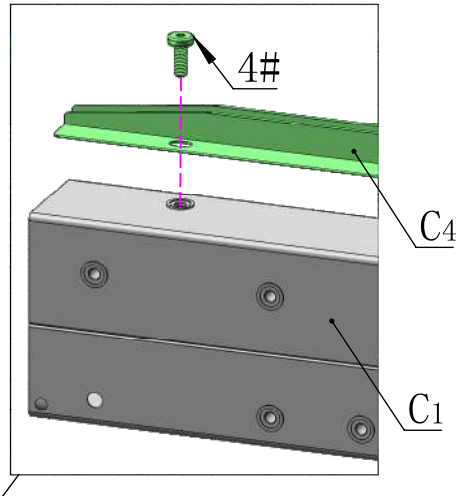

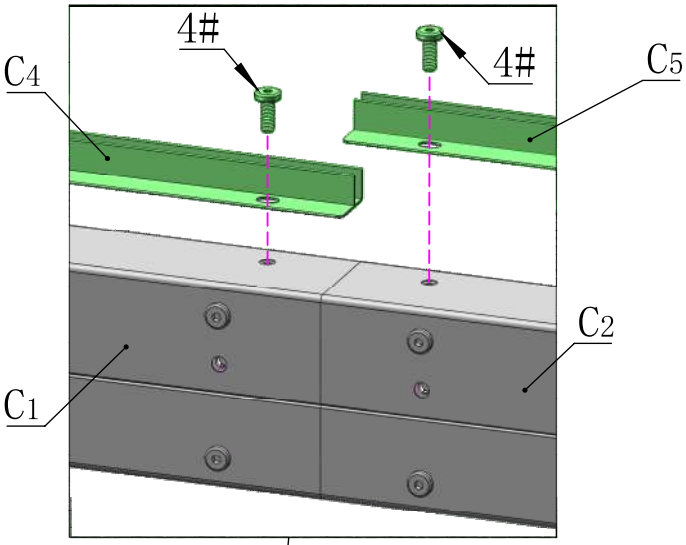

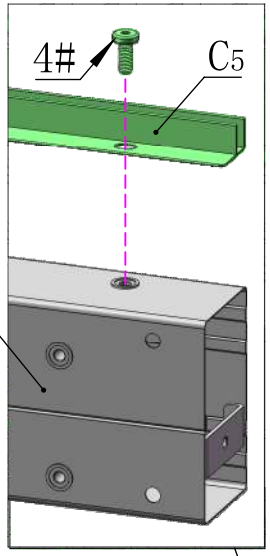

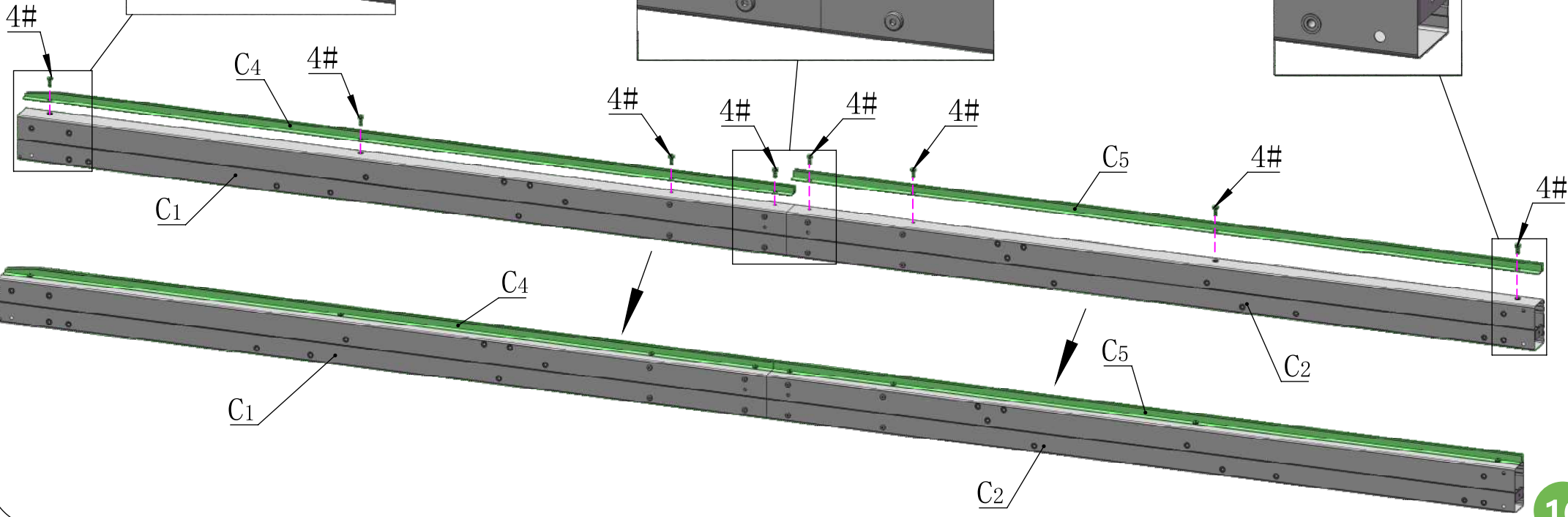

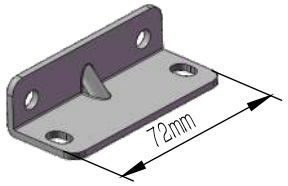

B7 2X

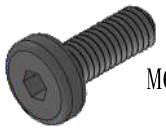

4# 4X



23# 1X

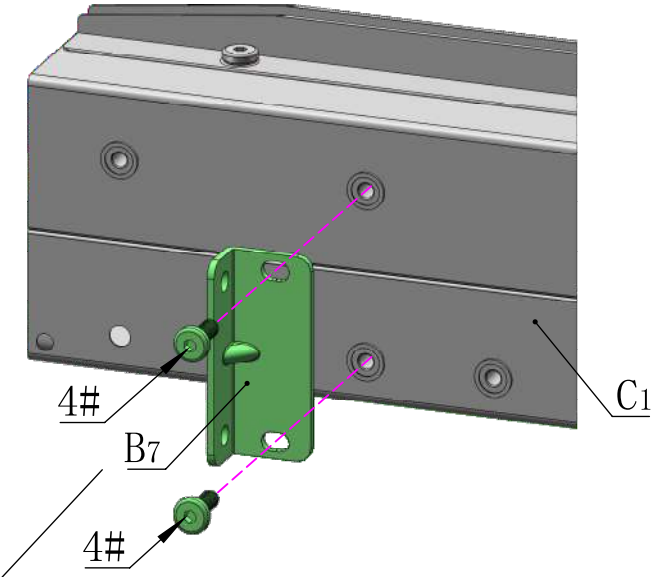

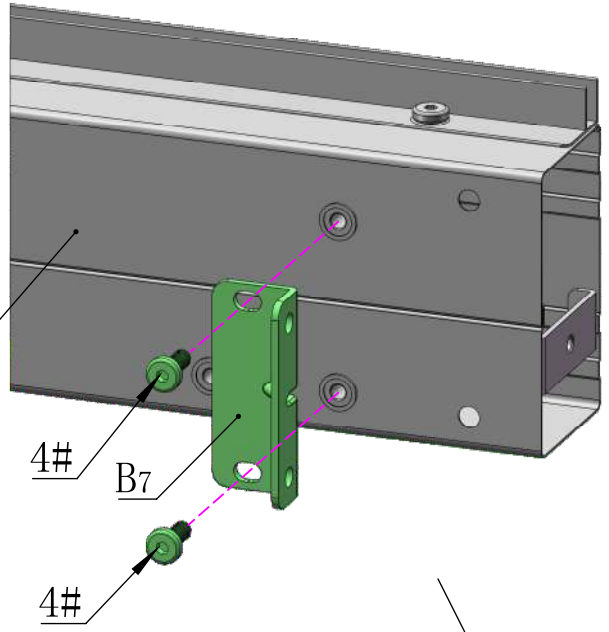

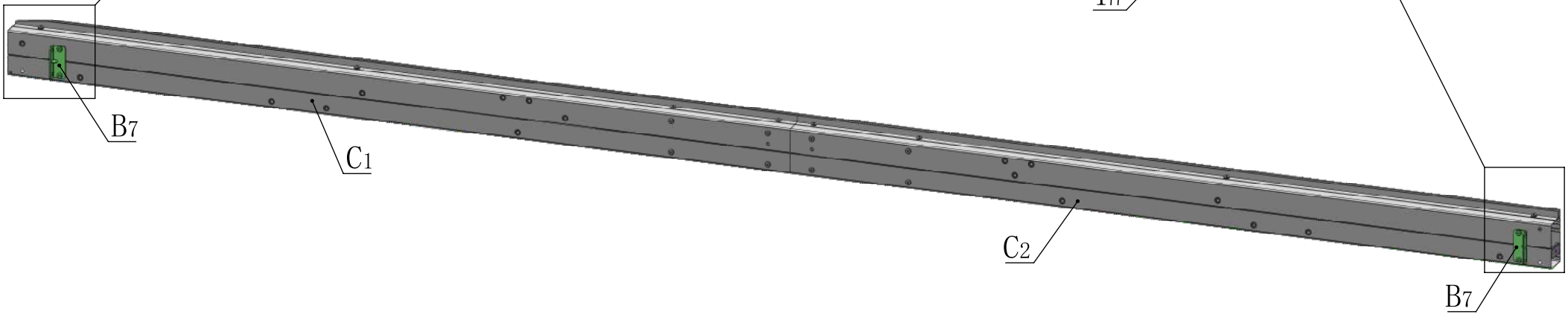

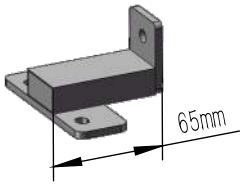

C6 1X

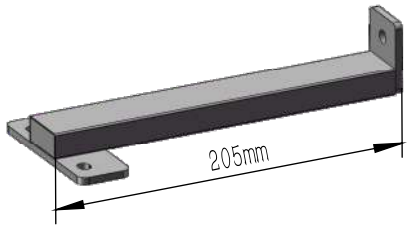

C7 1X



4# 4X

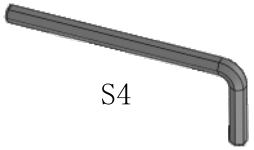

23# 1X

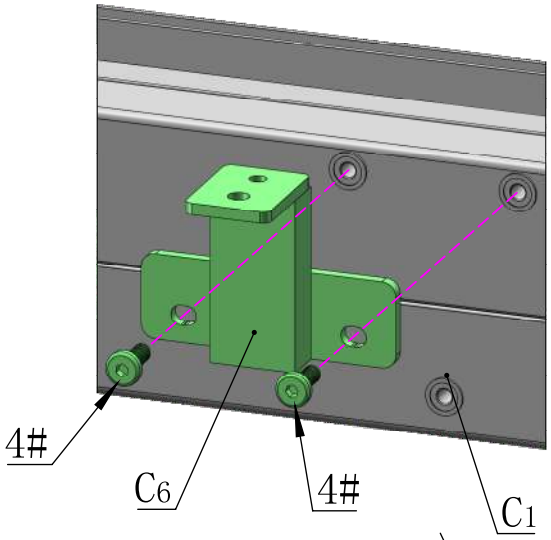

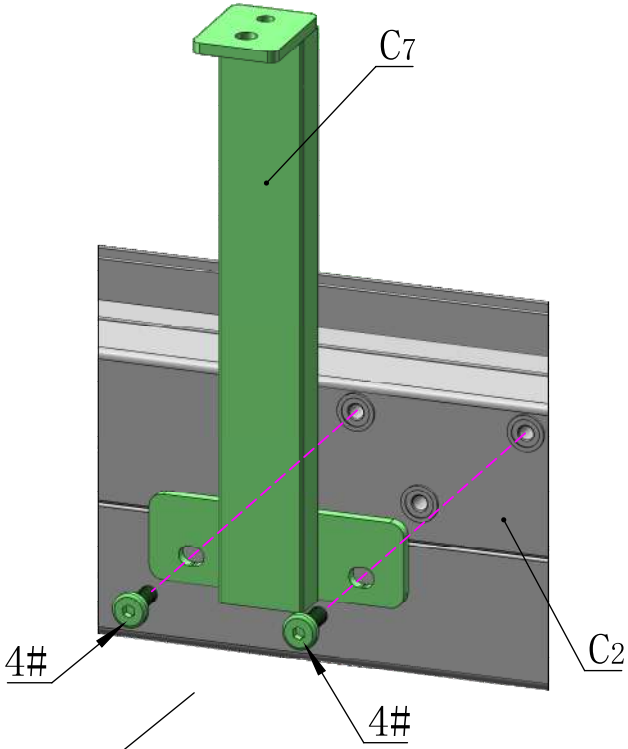

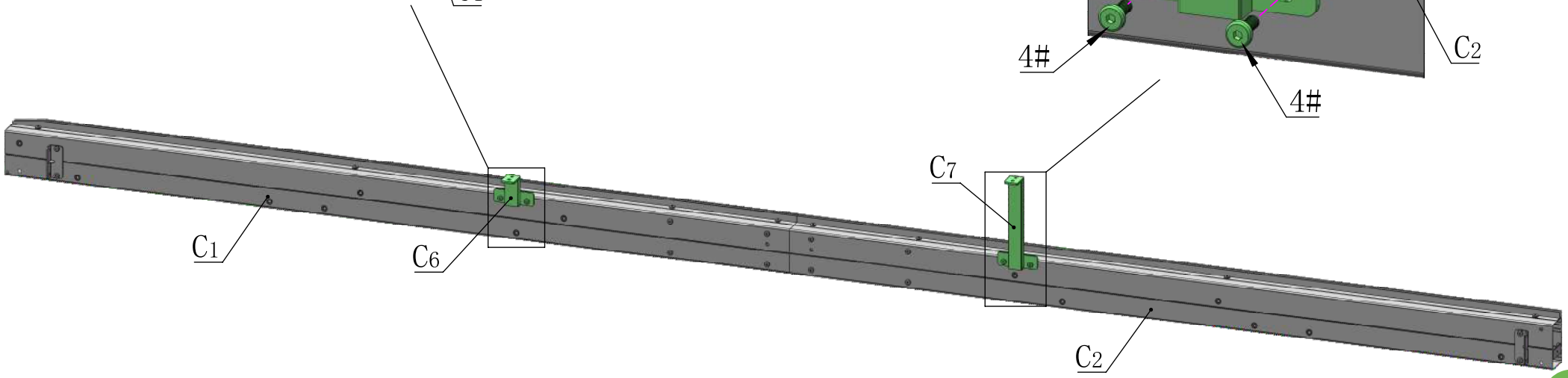

Side Beam Assembly

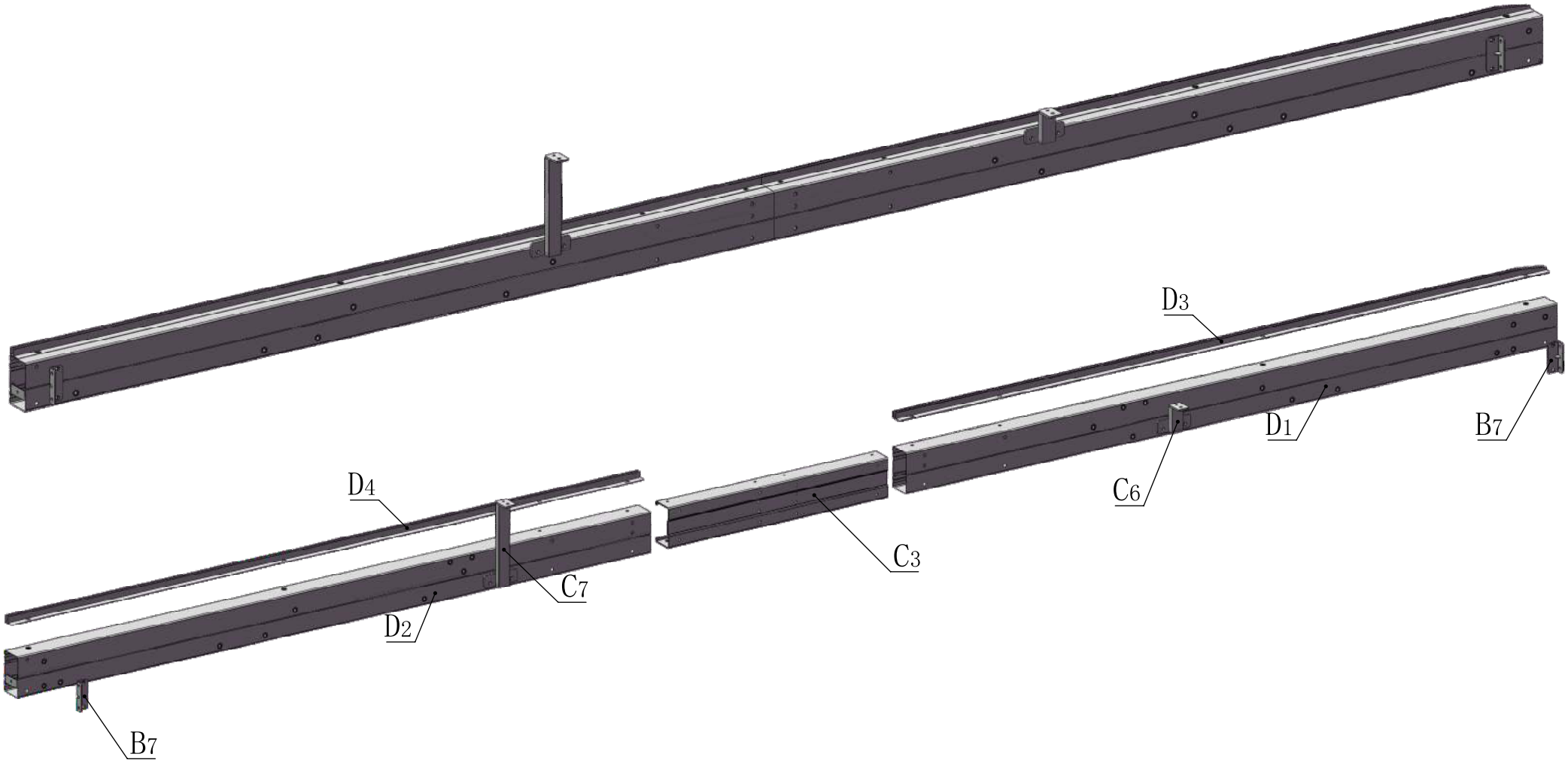

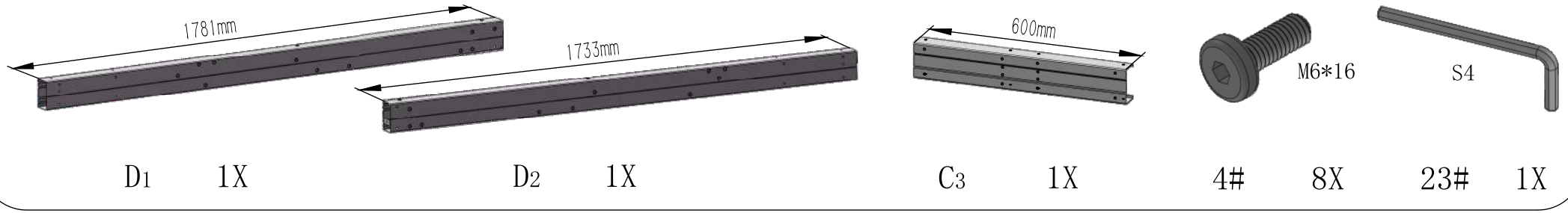

D1 1X D2 1X C3 1X 4# 8X 23# 1X

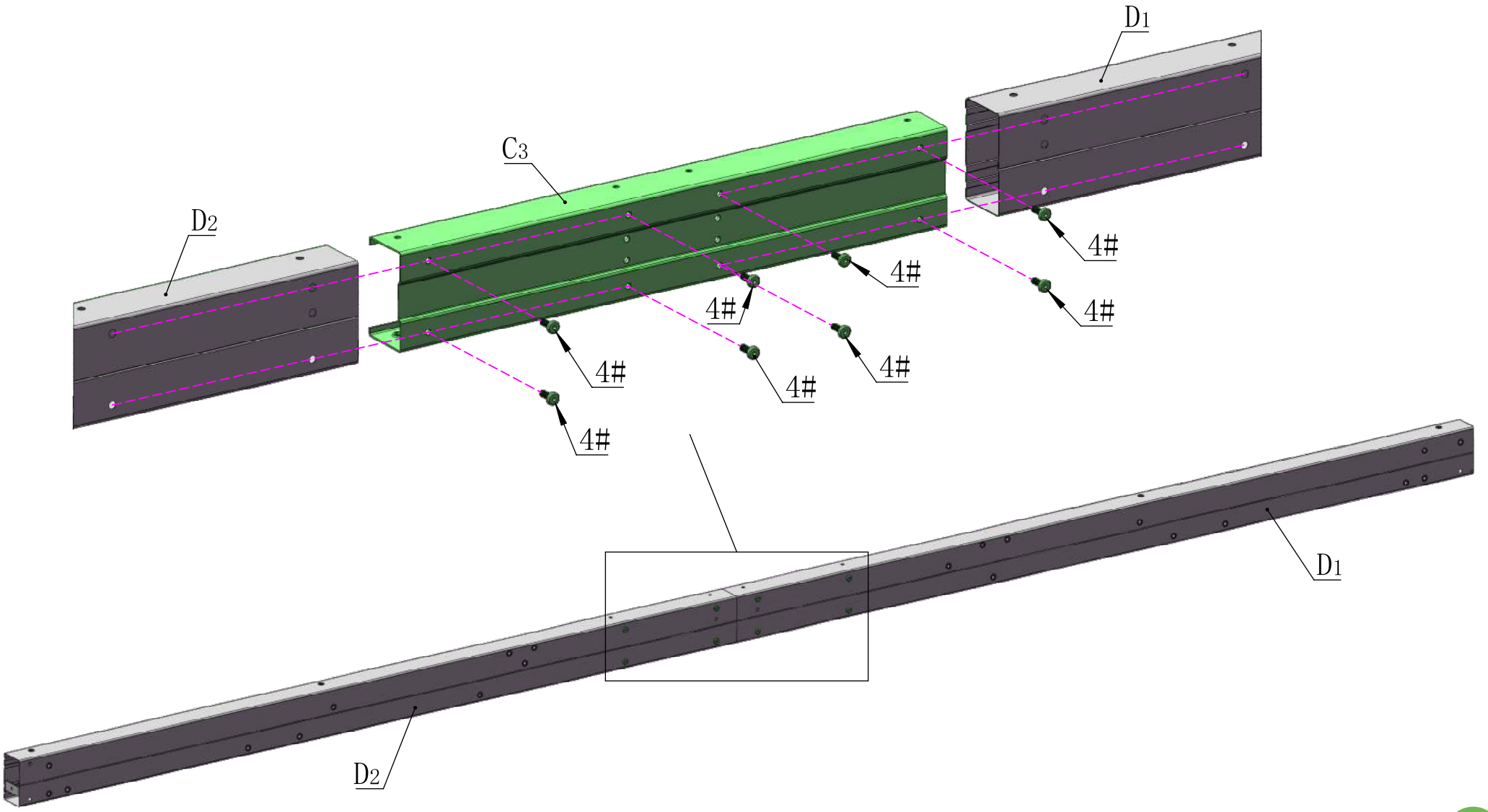

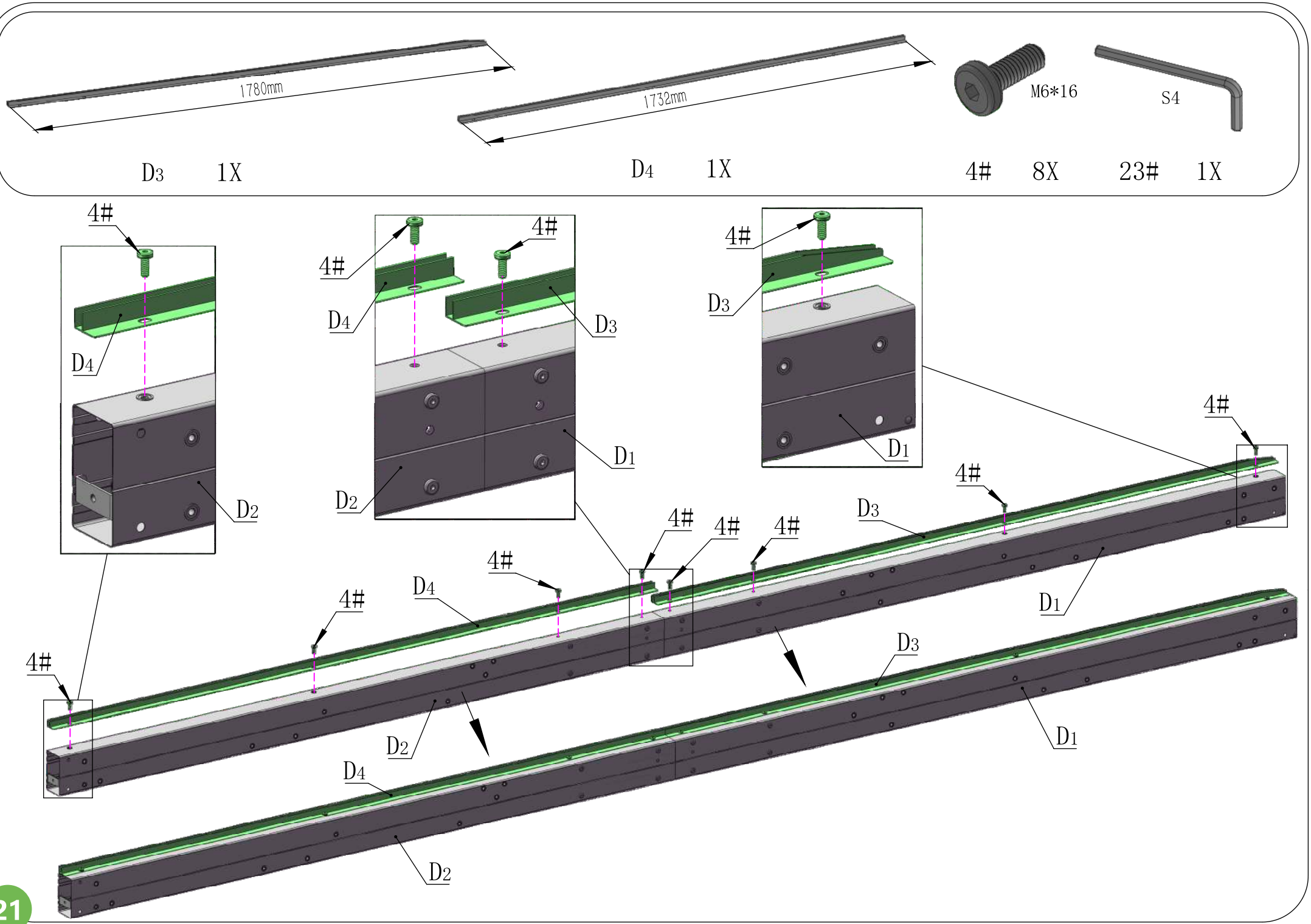
1780mm
1732mm
M6*16
S4
D3 1X
D4 1X
4# 8X
23# 1X
4#
D4
D2
D3
D1

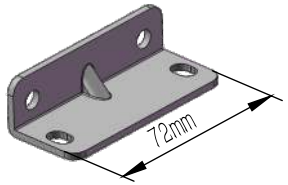

B7 2X



4# 4X

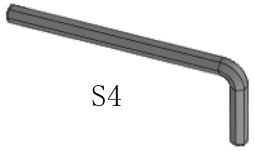

23# 1X

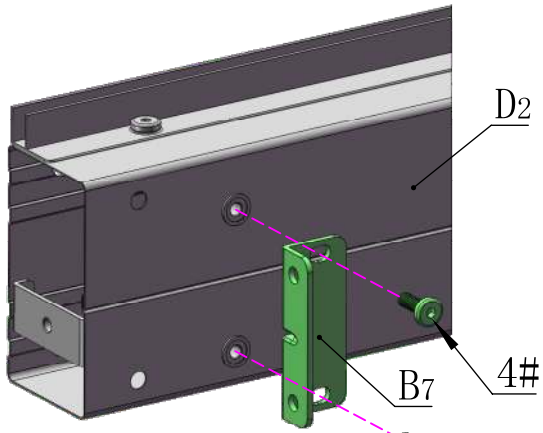

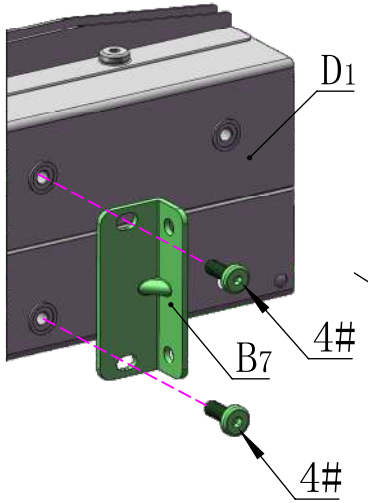

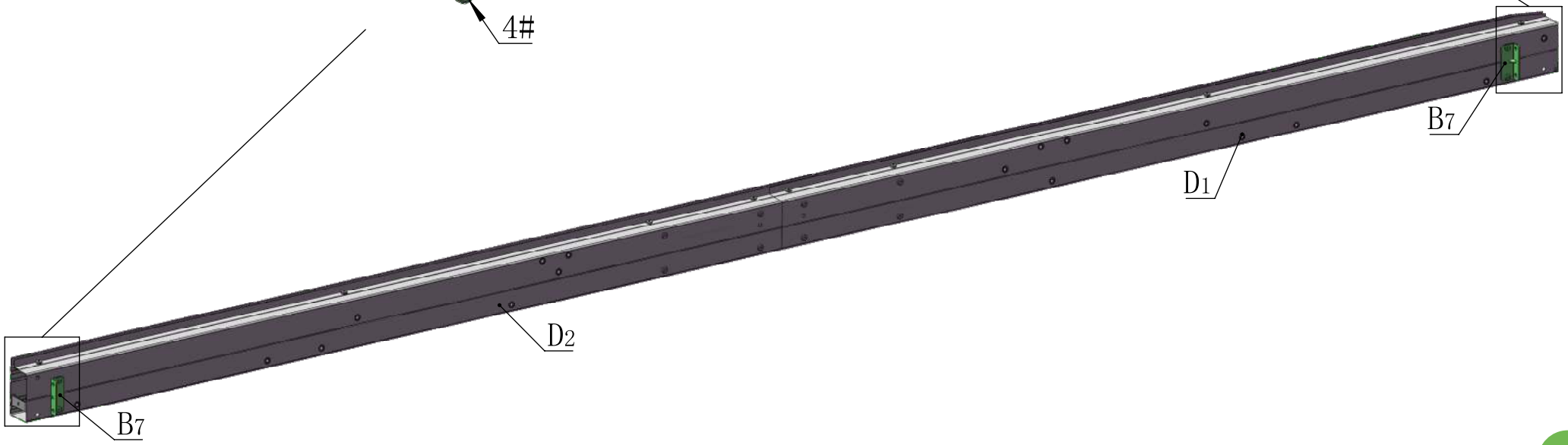

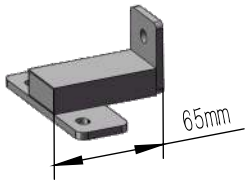

C6 1X

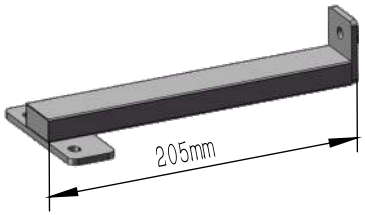

C7 1X

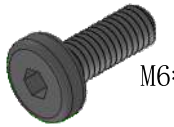

4# 4X

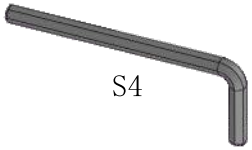

23# 1X

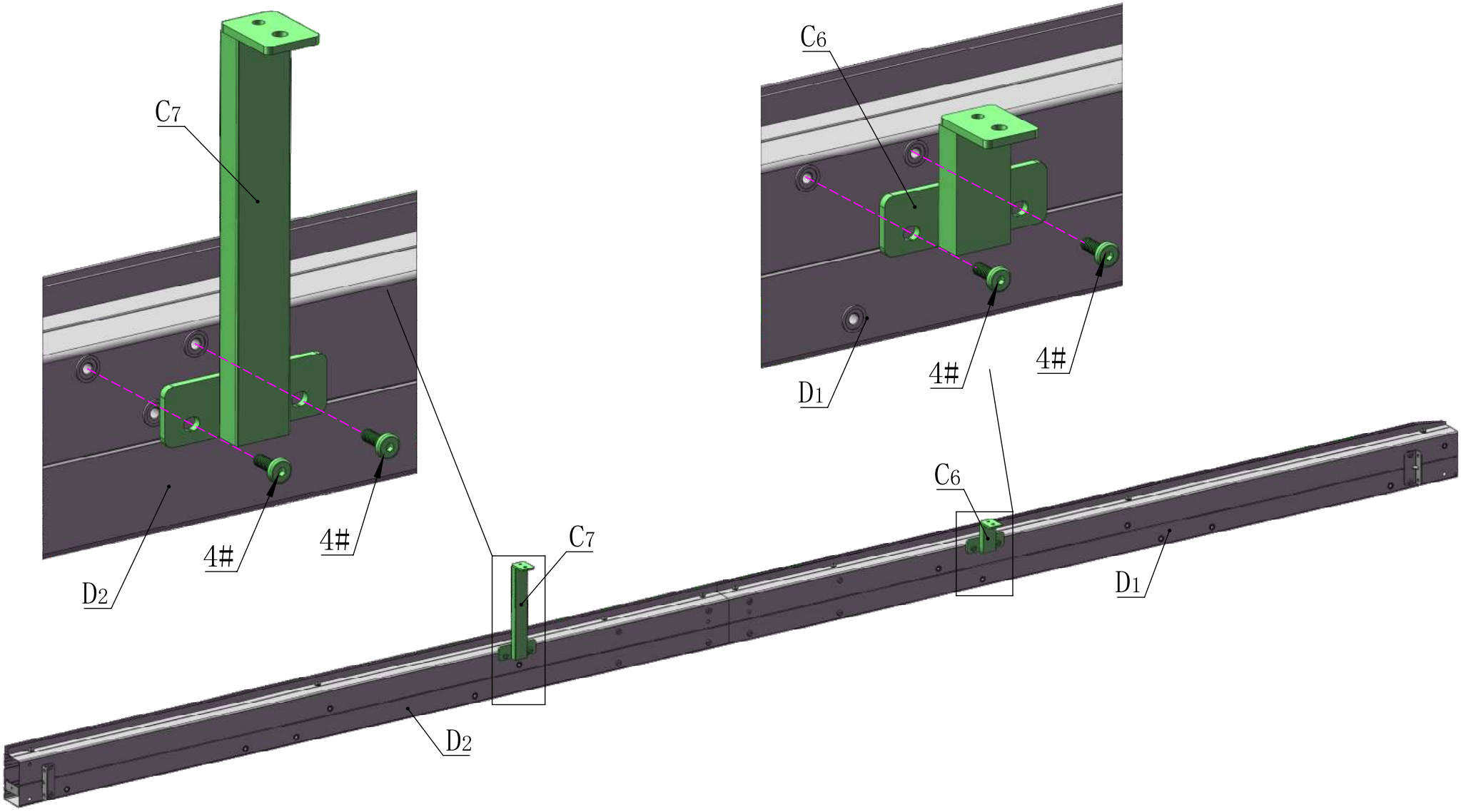

Rear Beam Assembly

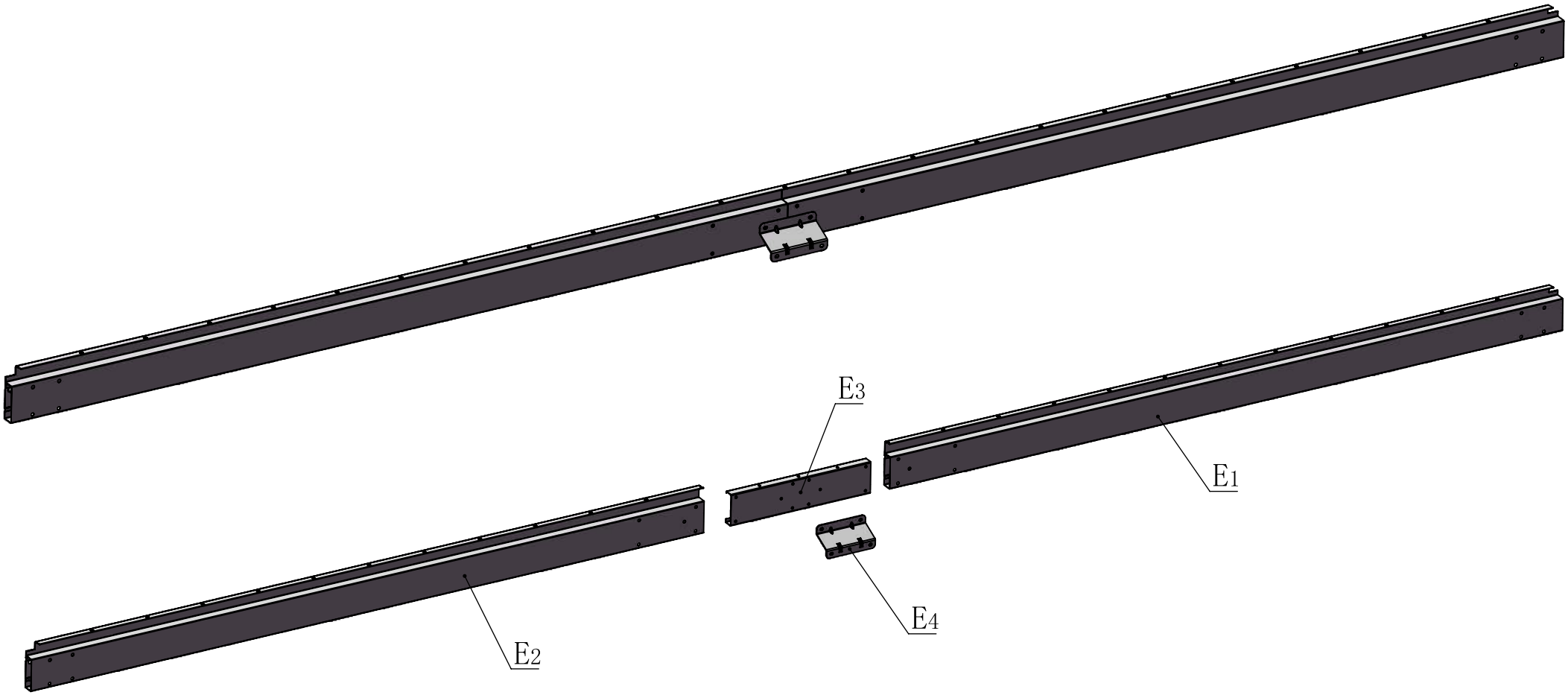

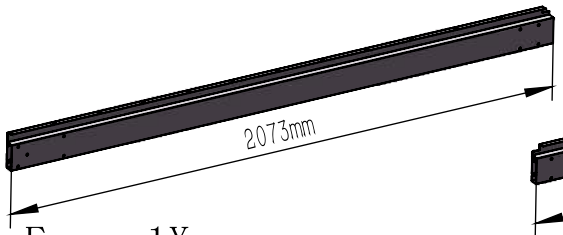

E1 1X

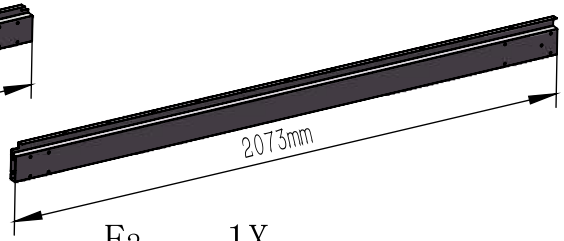

E2 1X

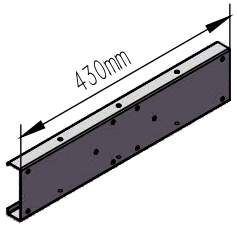

E3 1X

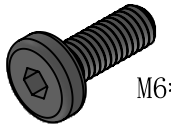

4# 10X

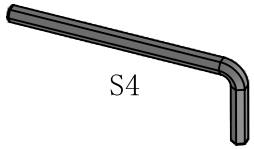

23# 1X

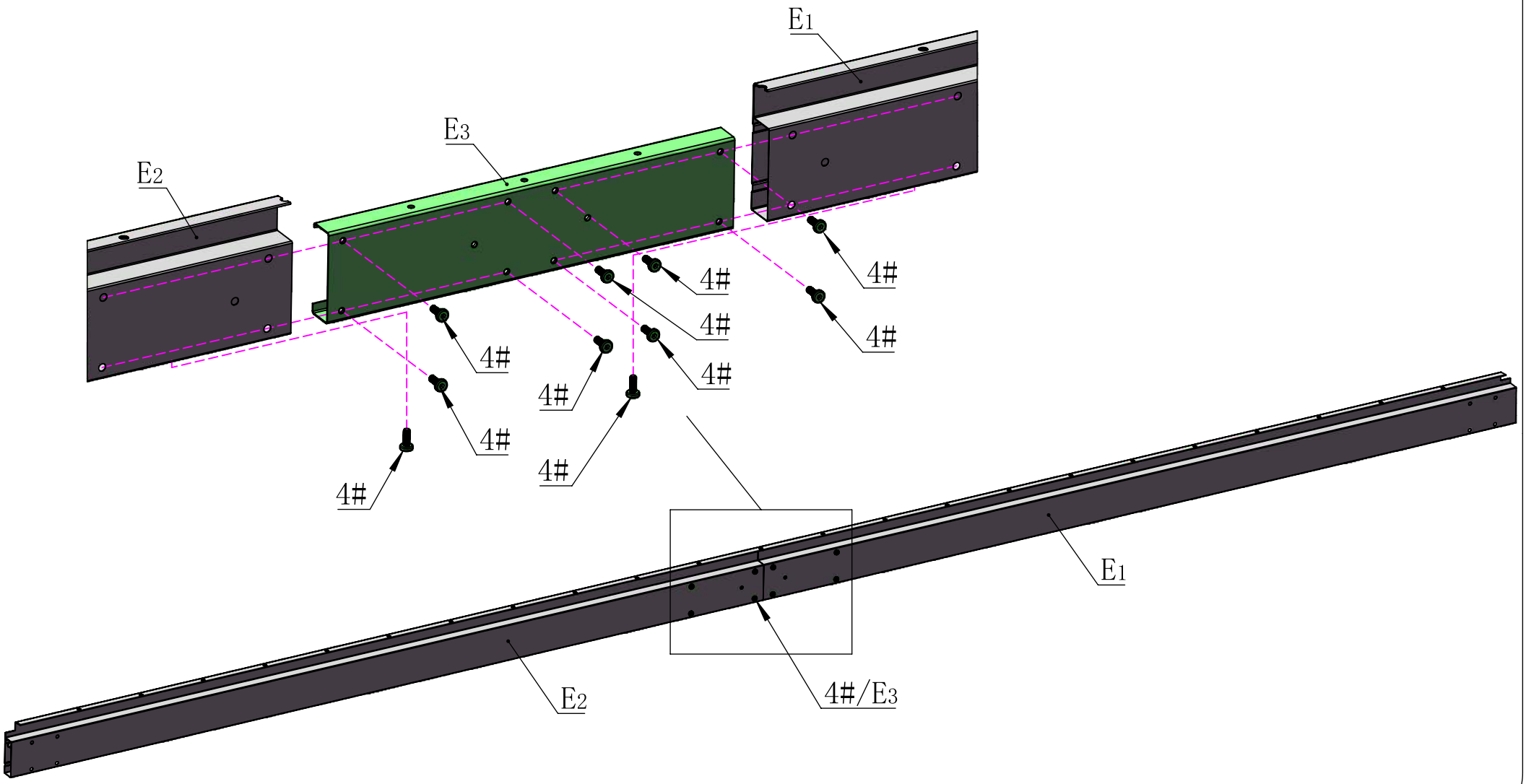

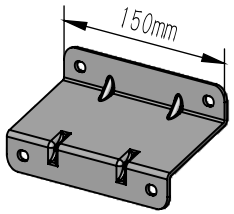

E4 1X

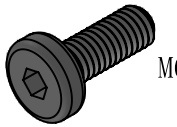

4# 2X

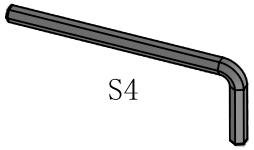

23# 1X

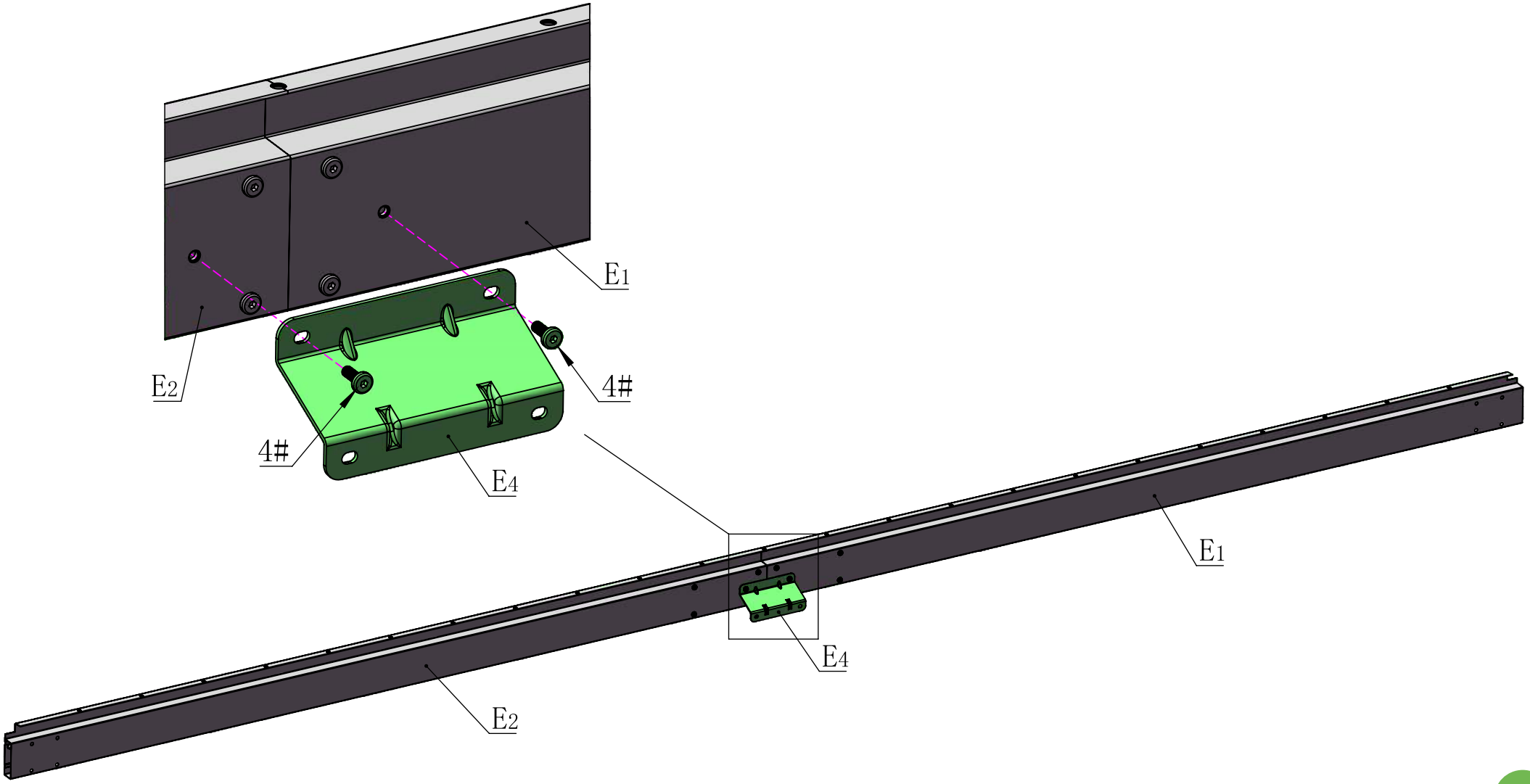

Frame Assembly

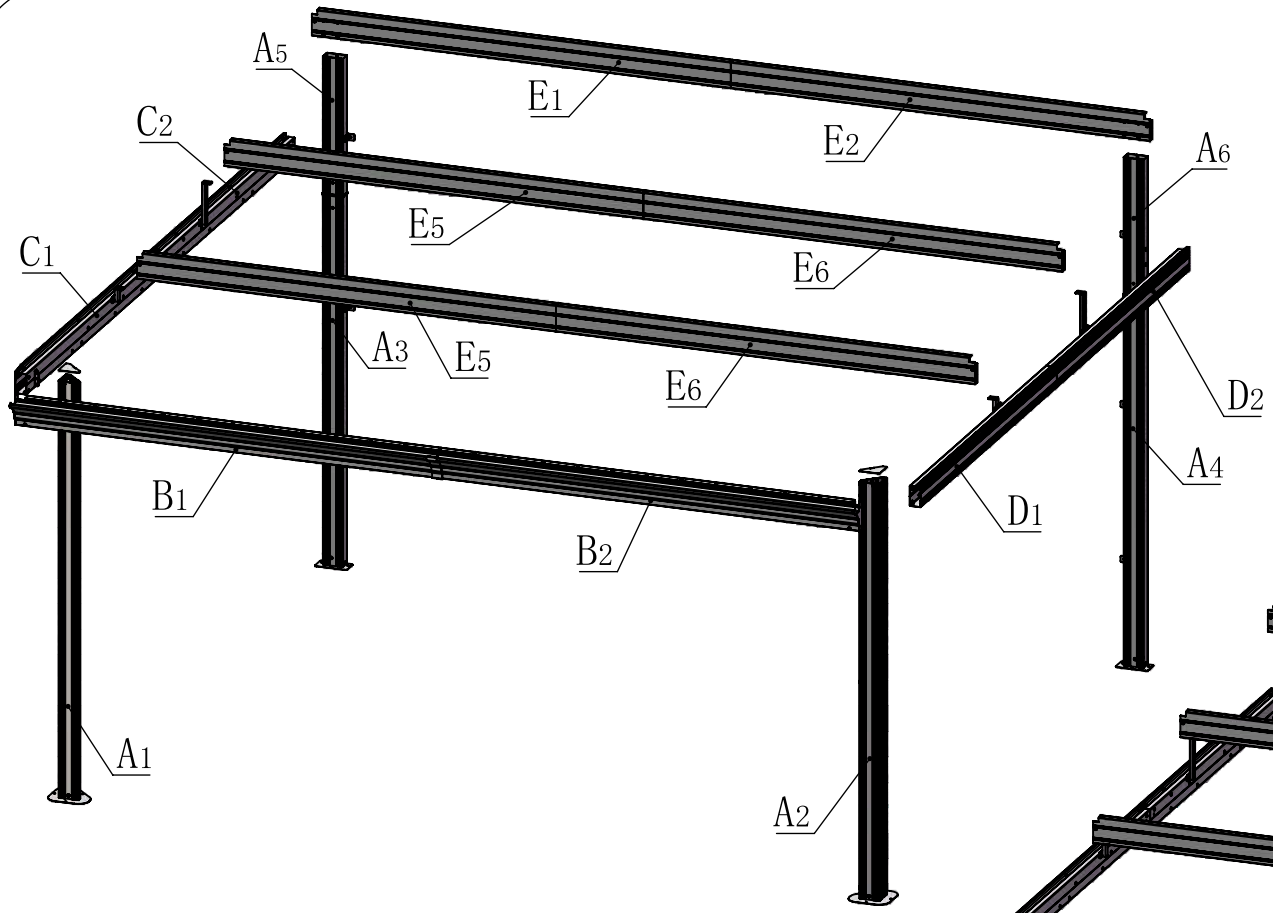



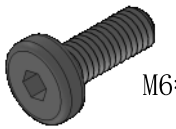

4# 6X

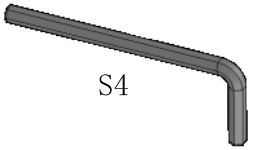

23# 1X

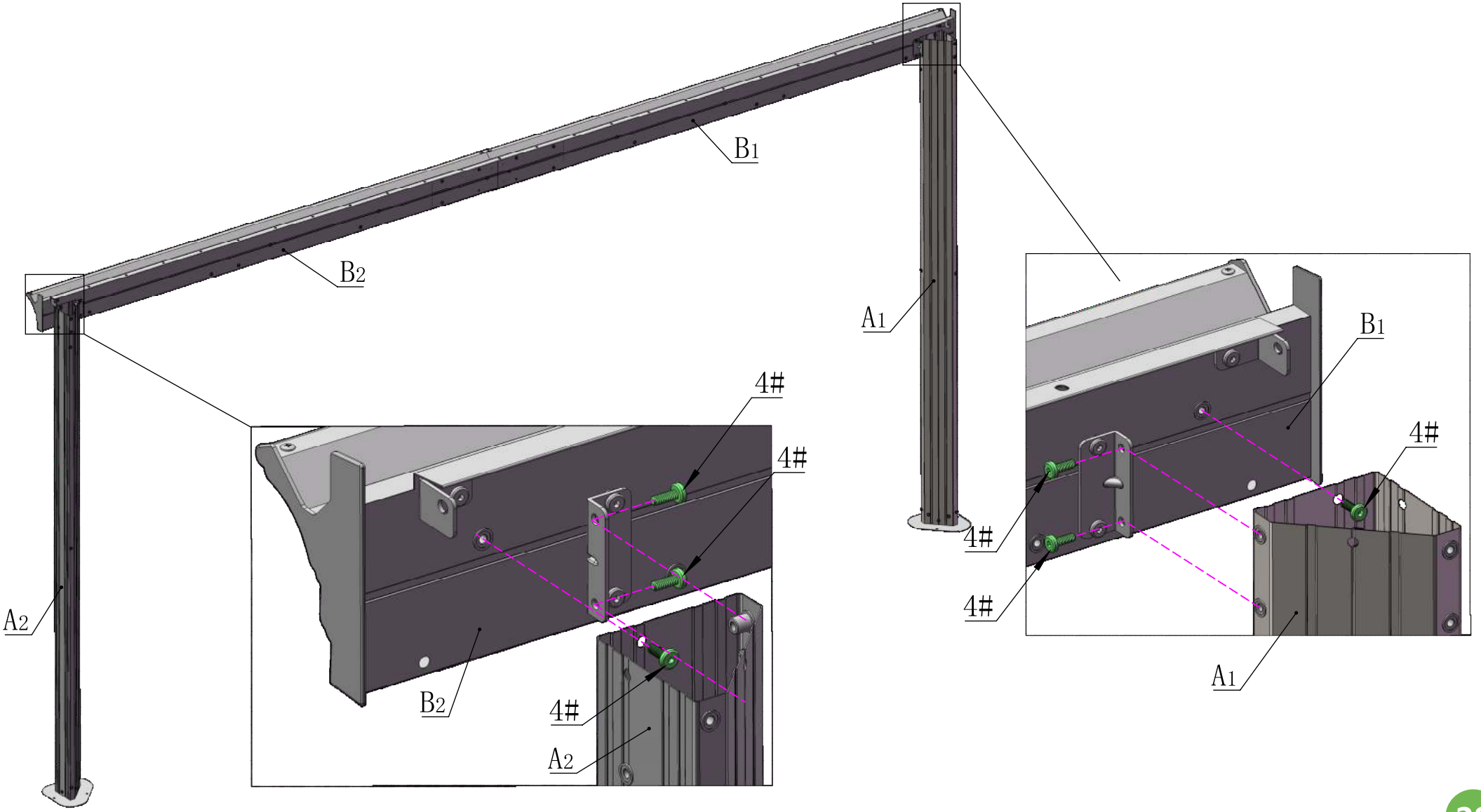

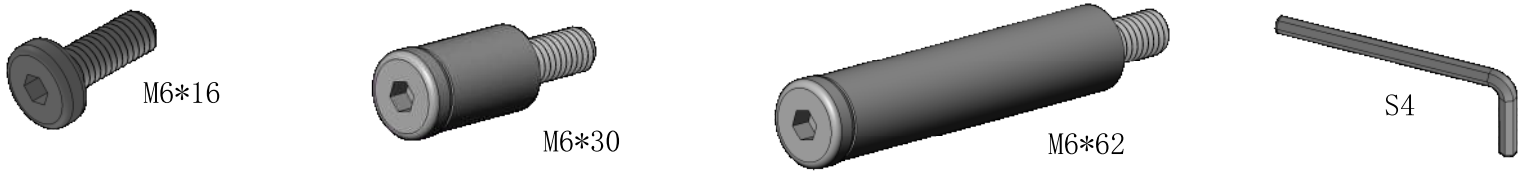

4# 10X 7# 2X 9# 6X 23# 1X

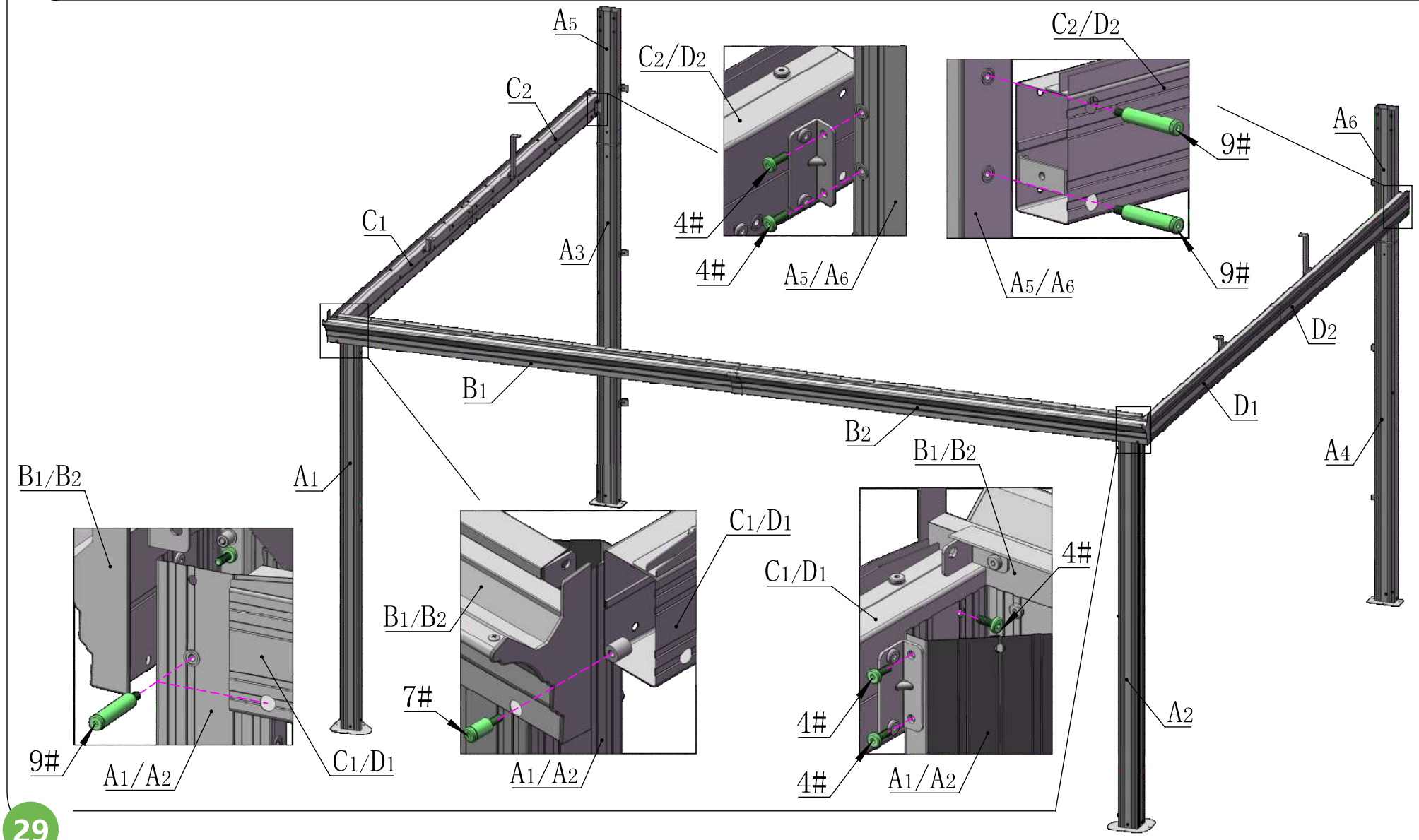

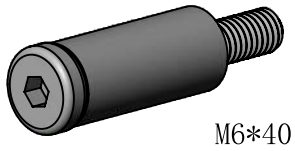
M6*40

8# 8X

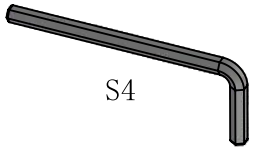
S4

23# 1X

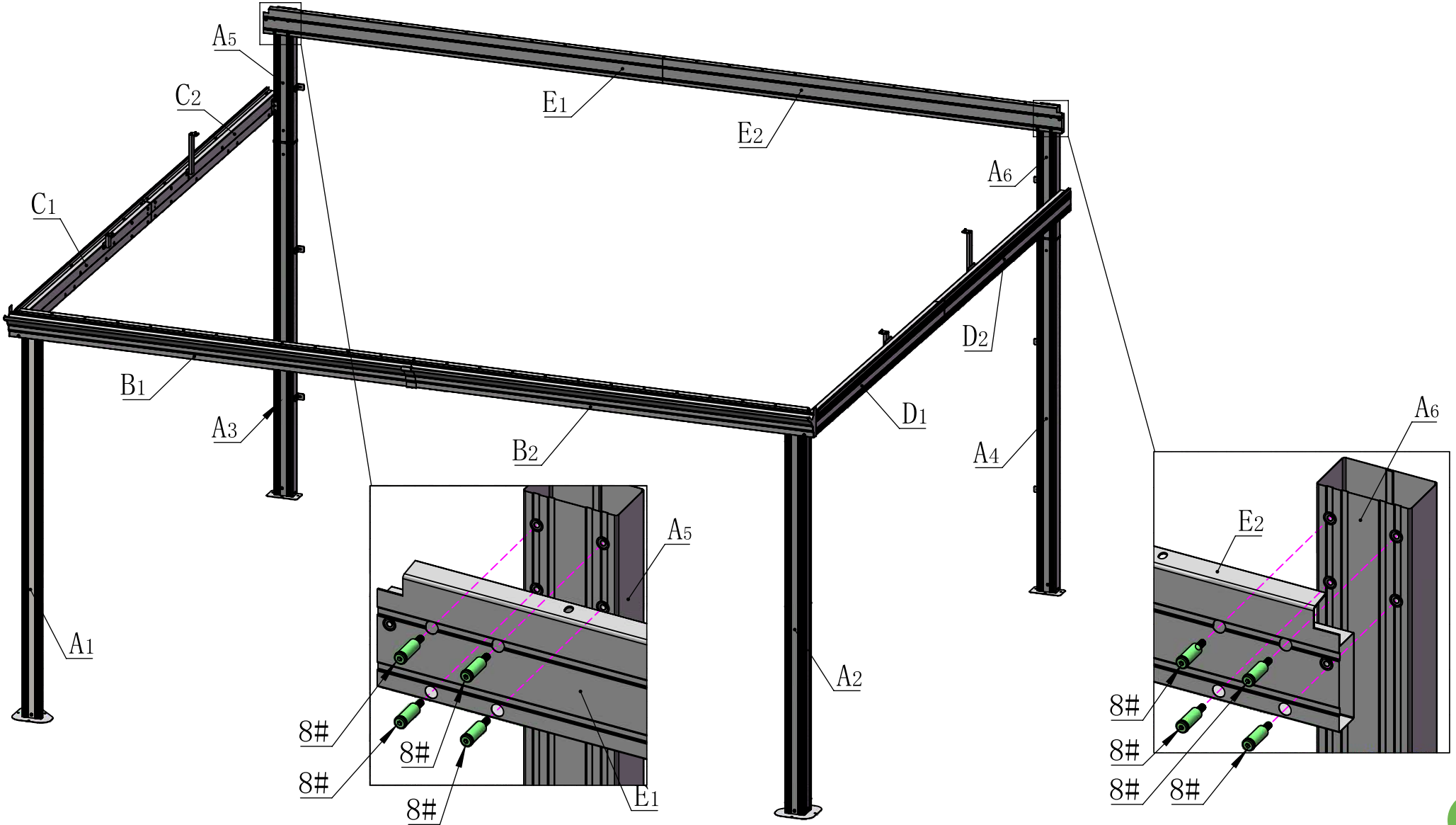
A5
C2
E1
E2
A6
C1
D2
B1
D1
A3
B2
A4
A6
A5
E2
A1
A2
8#
8#
8#
8#
E1
8#
8#
8#
8#

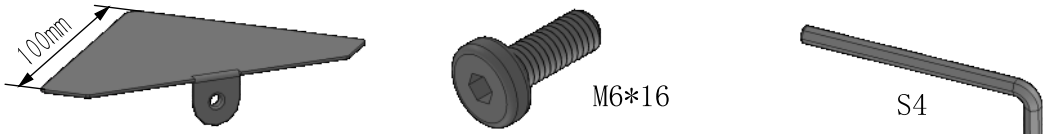

I1 2X

4# 2X

23# 1X

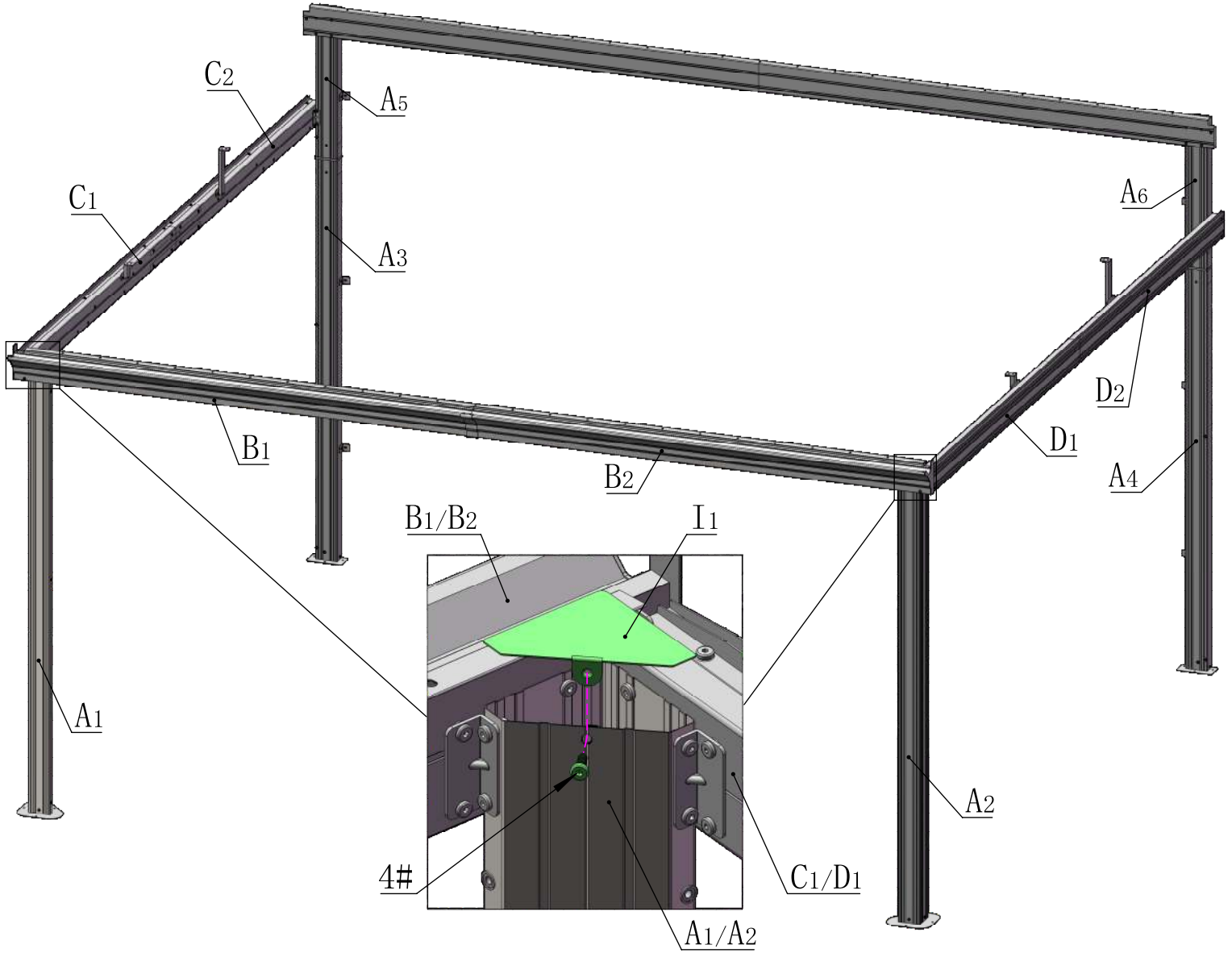

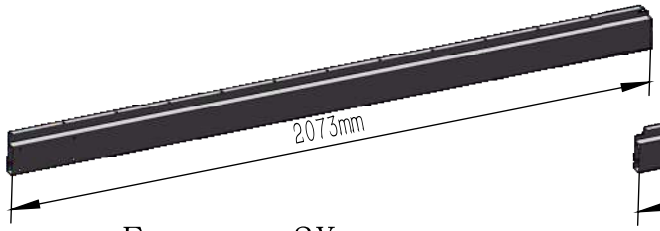

E5 2X

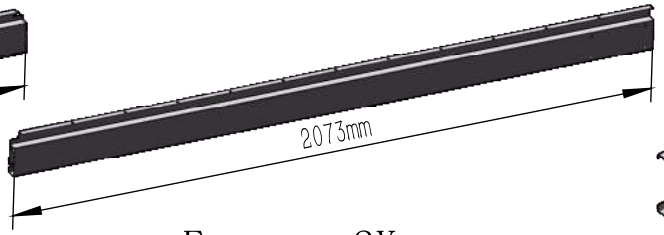

E6 2X

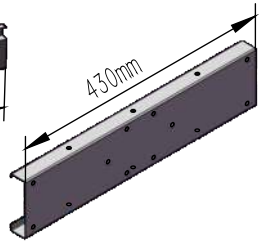

E3 2X

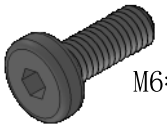

4# 20X

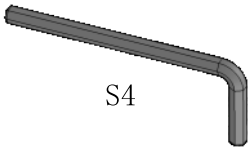

23# 1X

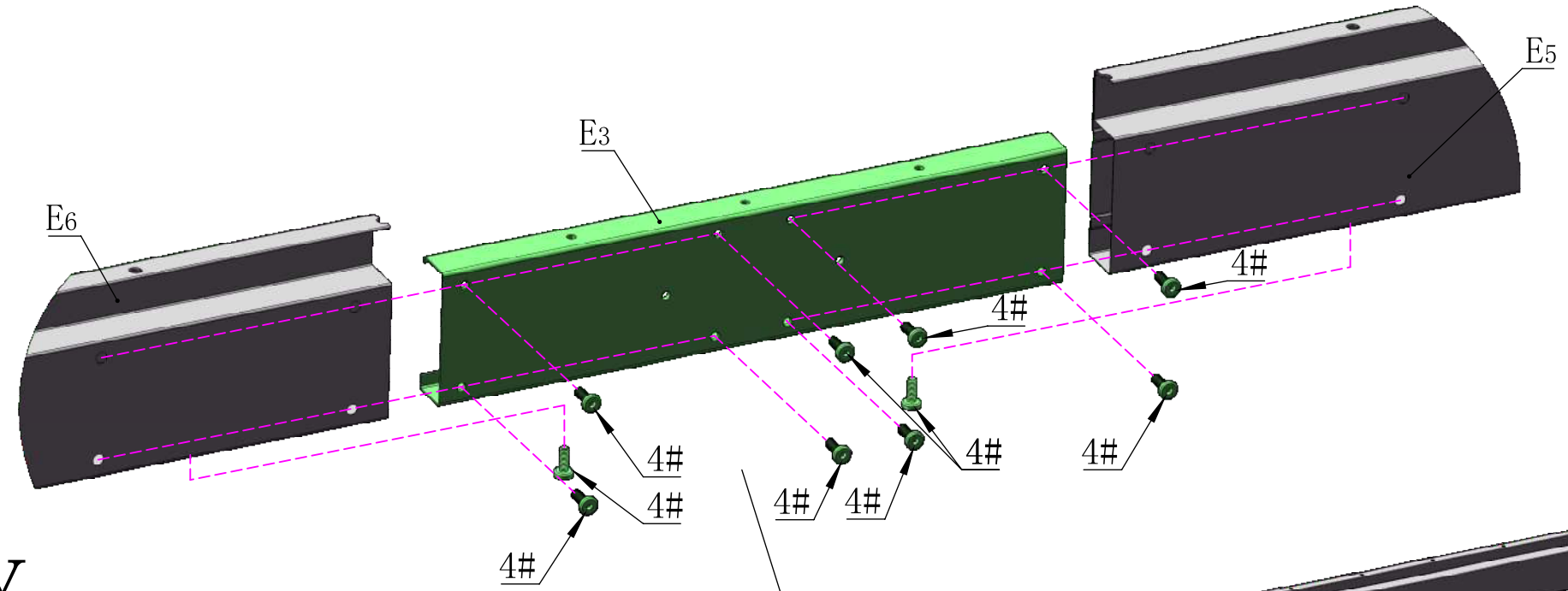

2X

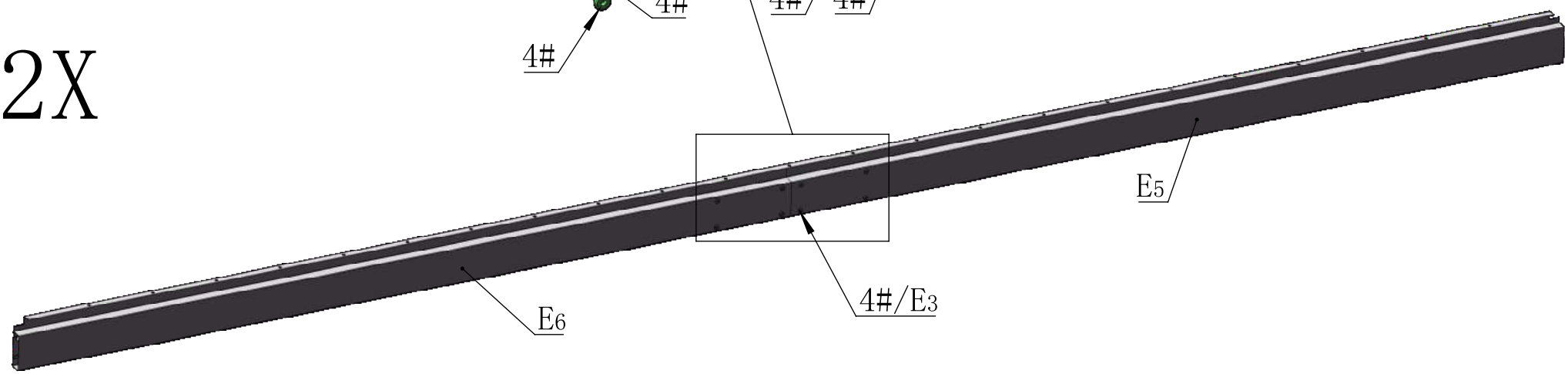


M6*16

4# 4X

S4

23# 1X

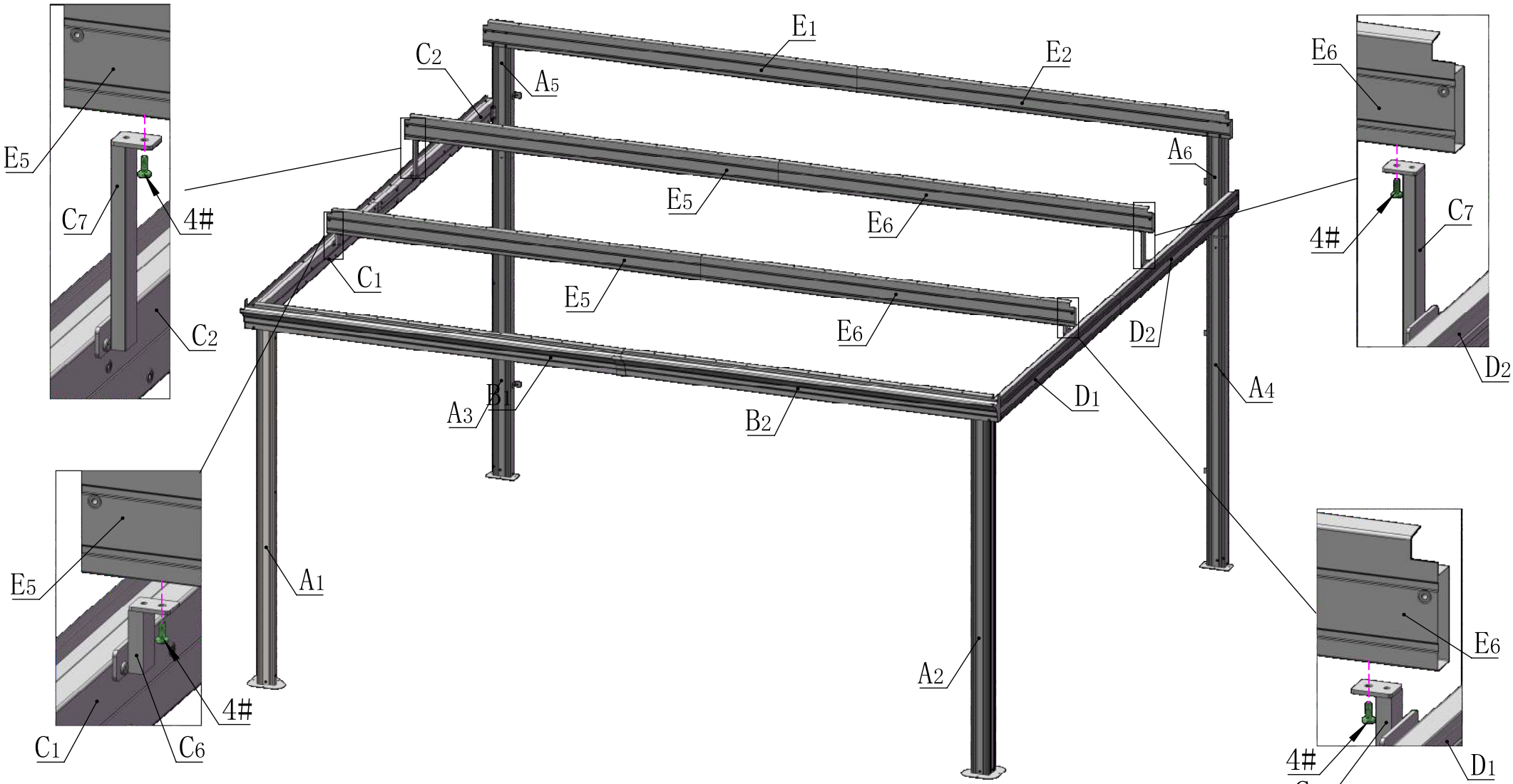
E1
C2
A5
E2
E5
A6
E6
C7
4#
E5
E6
C1
C2
E5
E6
D2
A3
B1
B2
D1
A4
A1
A2
E5
4#
C1
C6
E6
4#
C6
D1
E6
4#
C7
D2

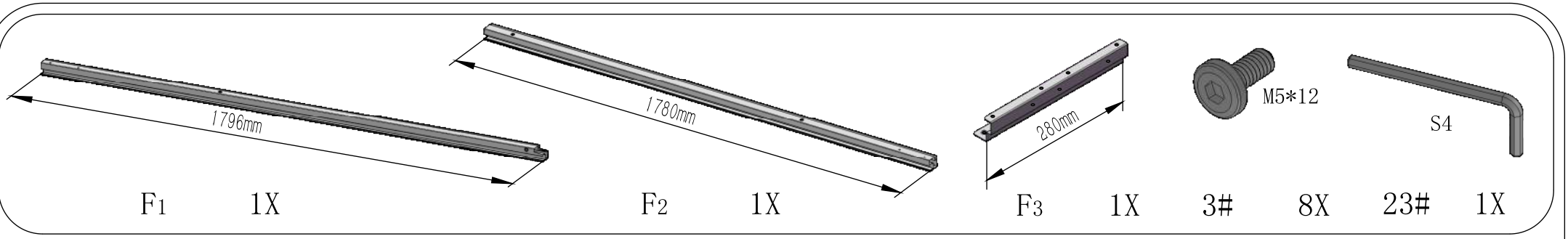

F1 1X F2 1X F3 1X 3# 8X 23# 1X

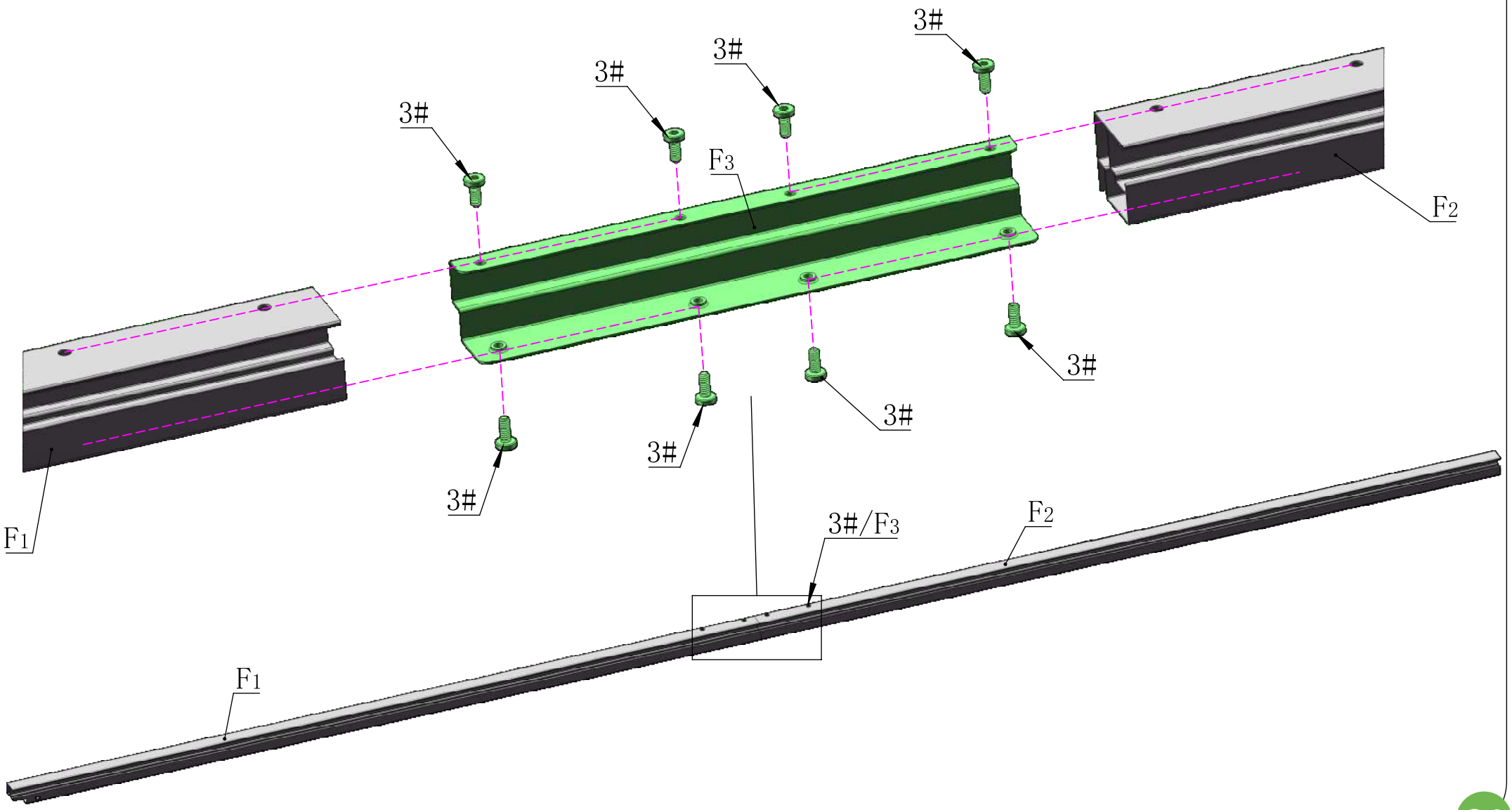

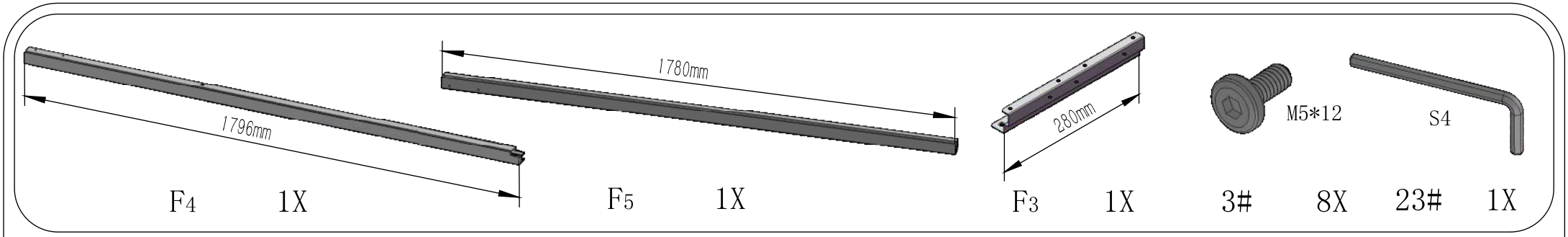

F4 1X F5 1X F3 1X 3# 8X 23# 1X

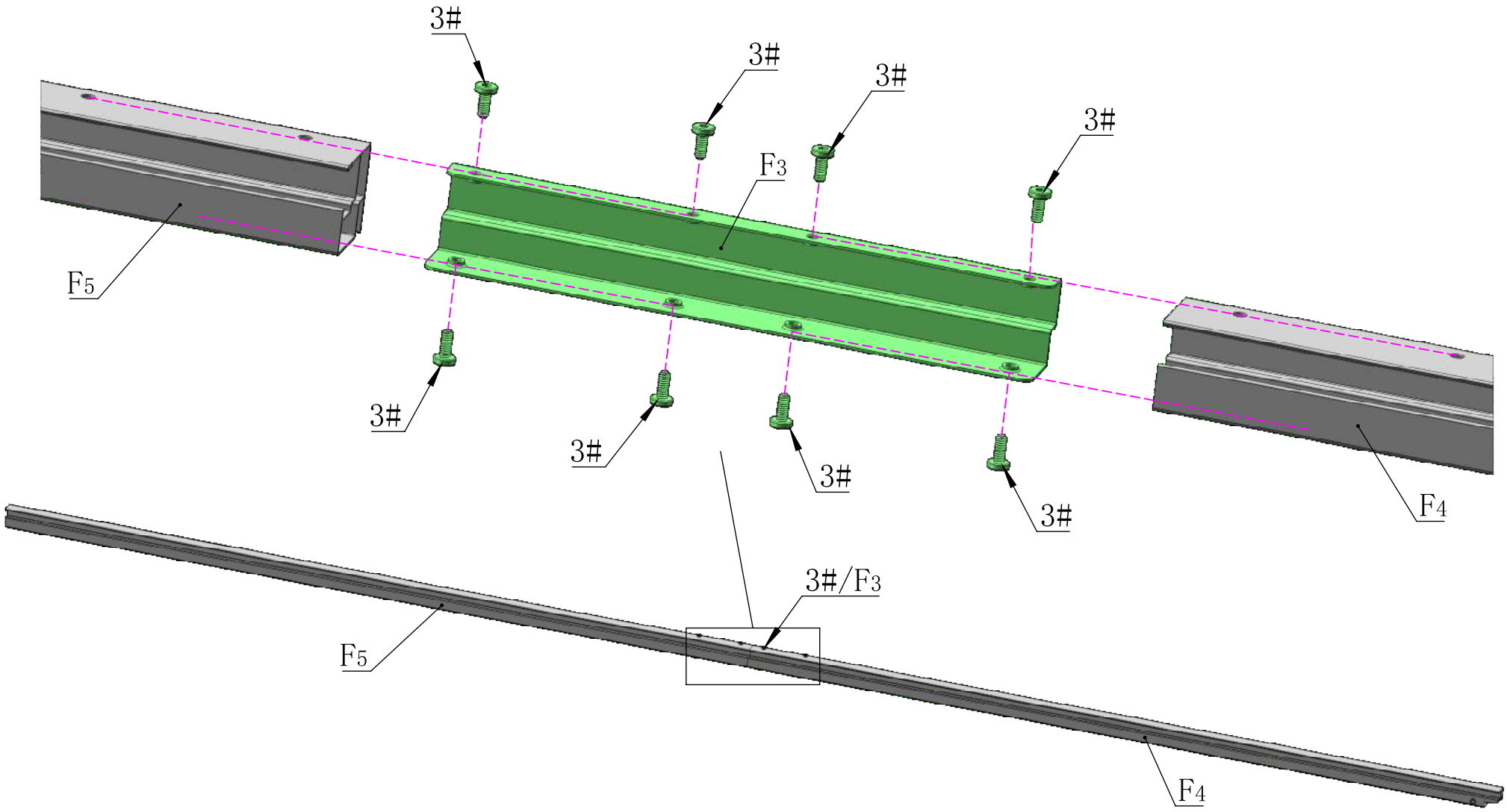

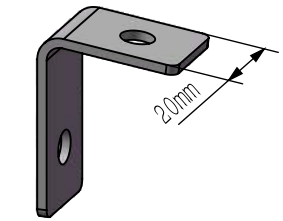

I2 6X

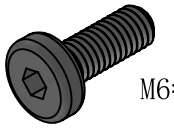

4# 14X

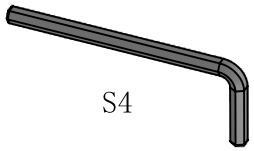

23# 1X

Note: The Bracket #I2 is assembled here to fix the beam(E1/E2/E5/E6) FIRST, and then fix the parietal bone(F1/F2/F4/F5).

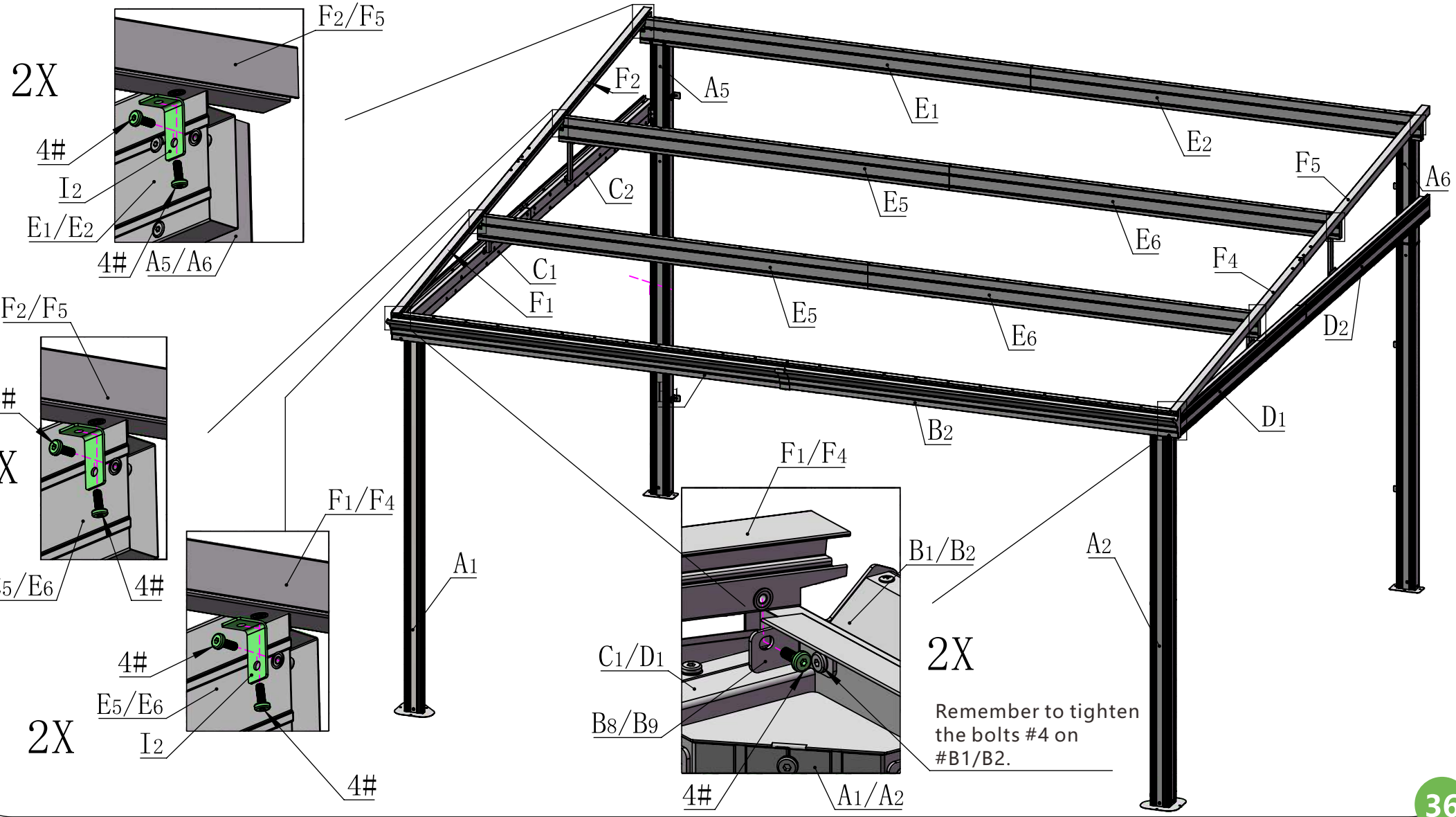

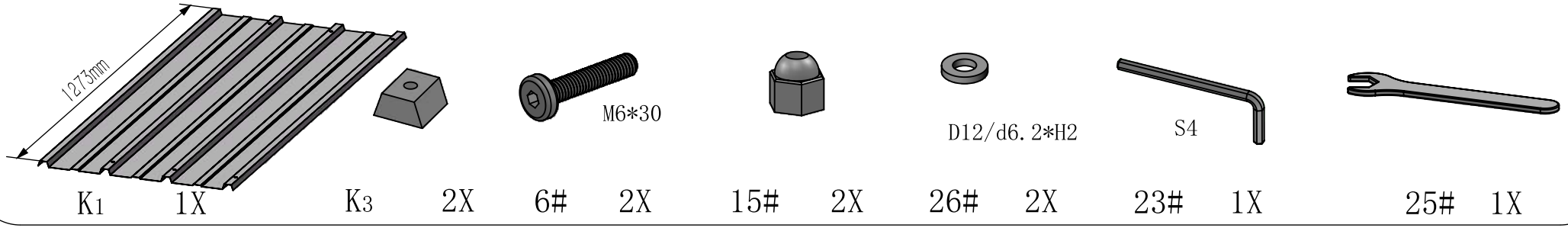

K1 1X K3 2X 6# 2X 15# 2X 26# 2X 23# 1X 25# 1X

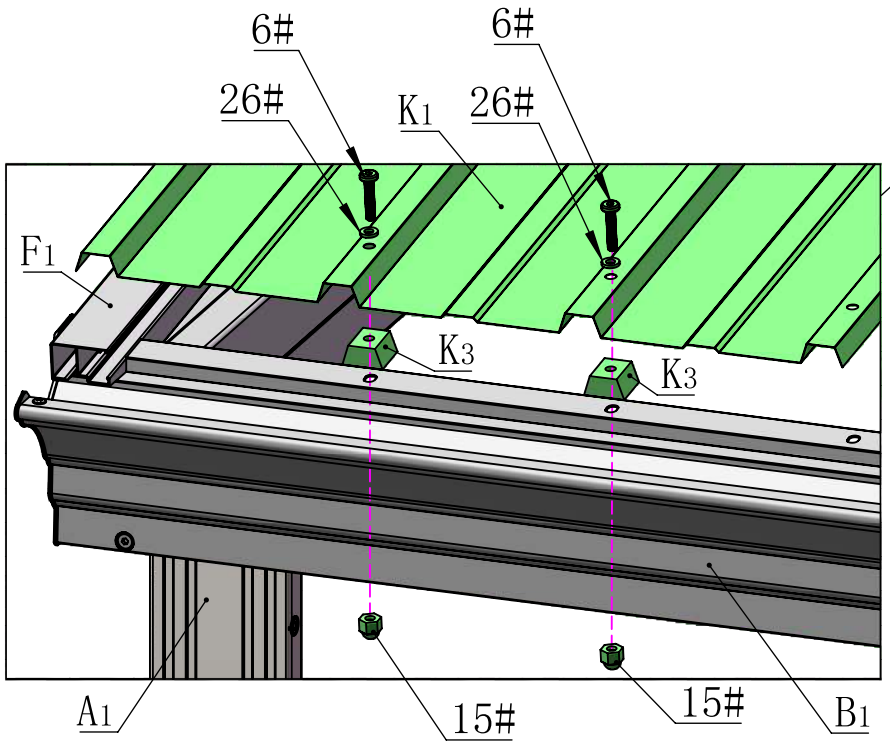

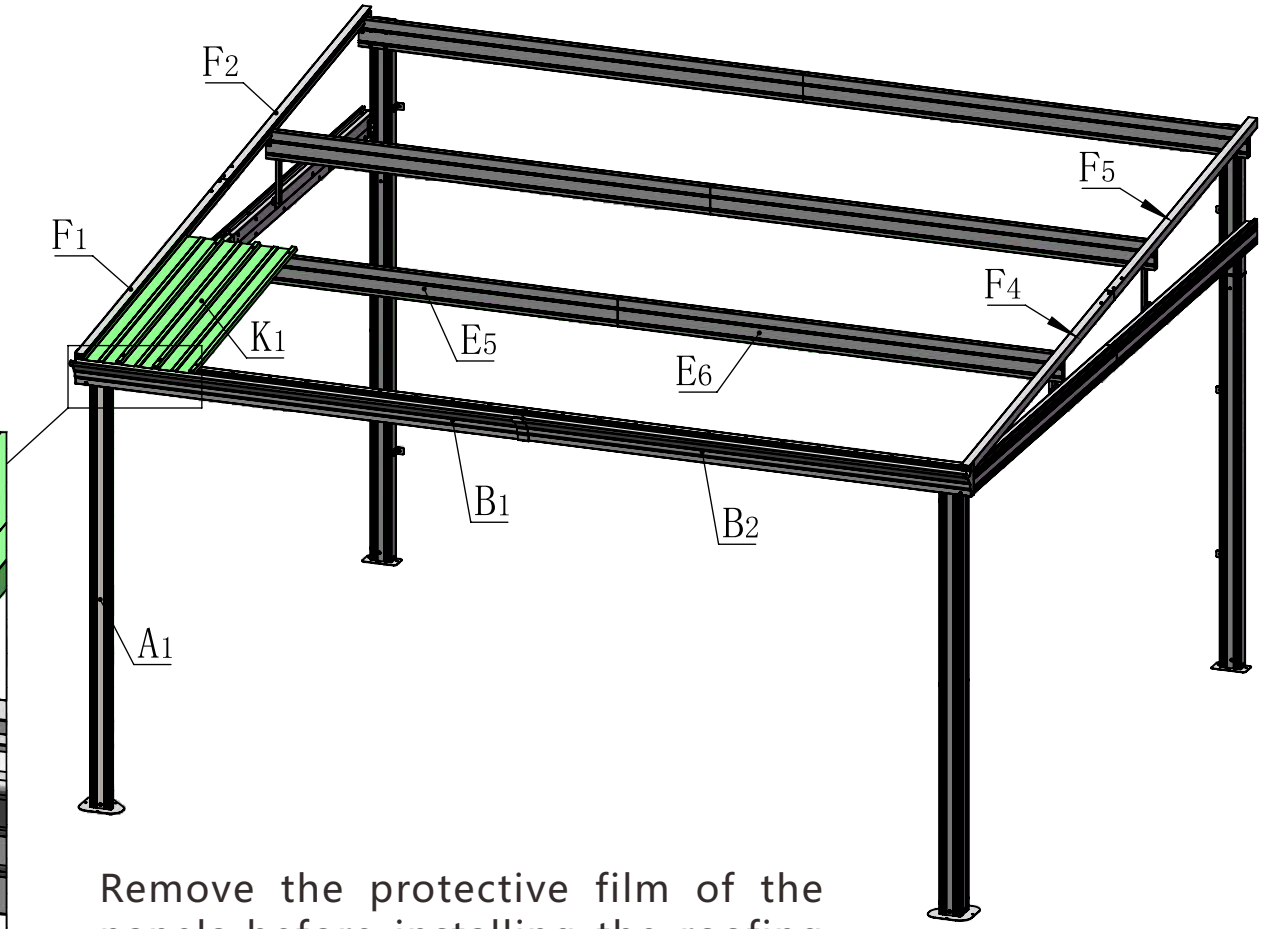

Remove the protective film of the panels before installing the roofing panels.

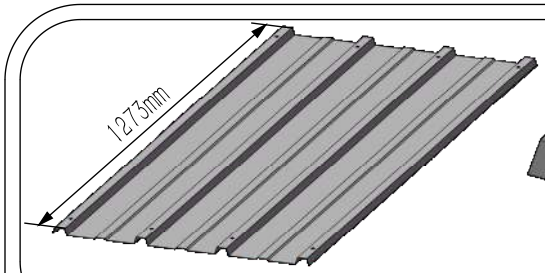

K2 6X



K3 18X

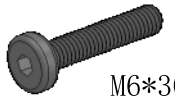

6# 18X



15# 18X



26# 18X

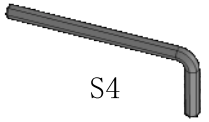

23# 1X



25# 1X

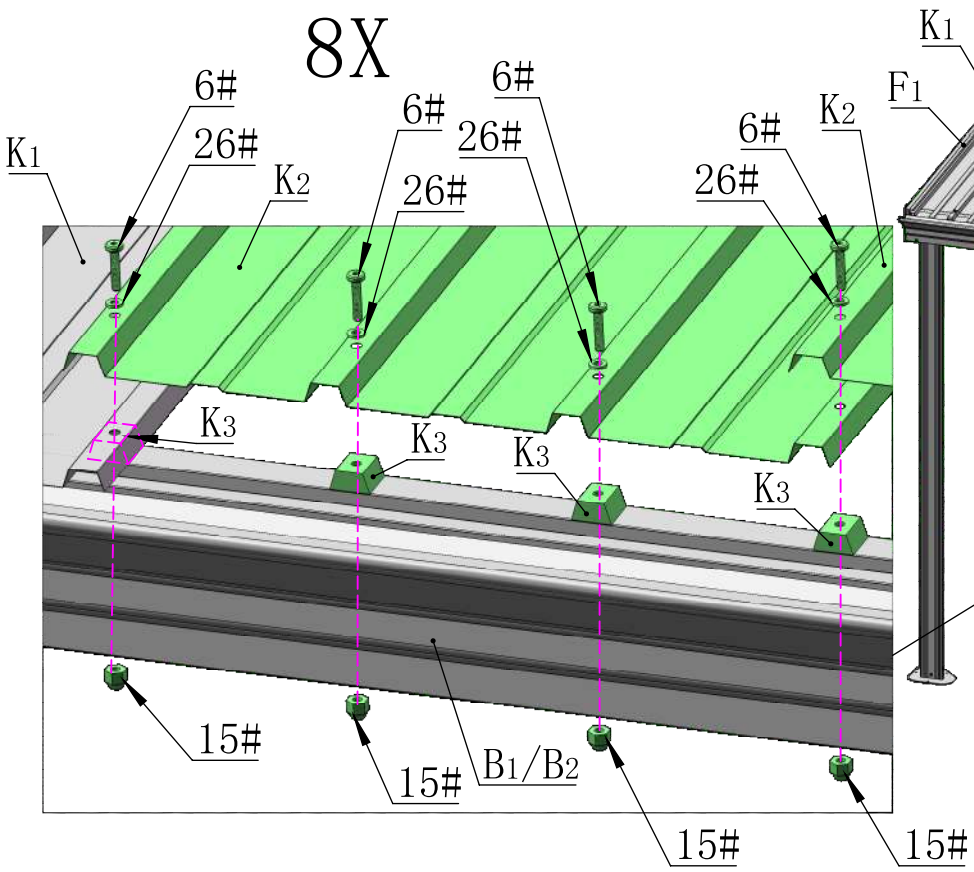

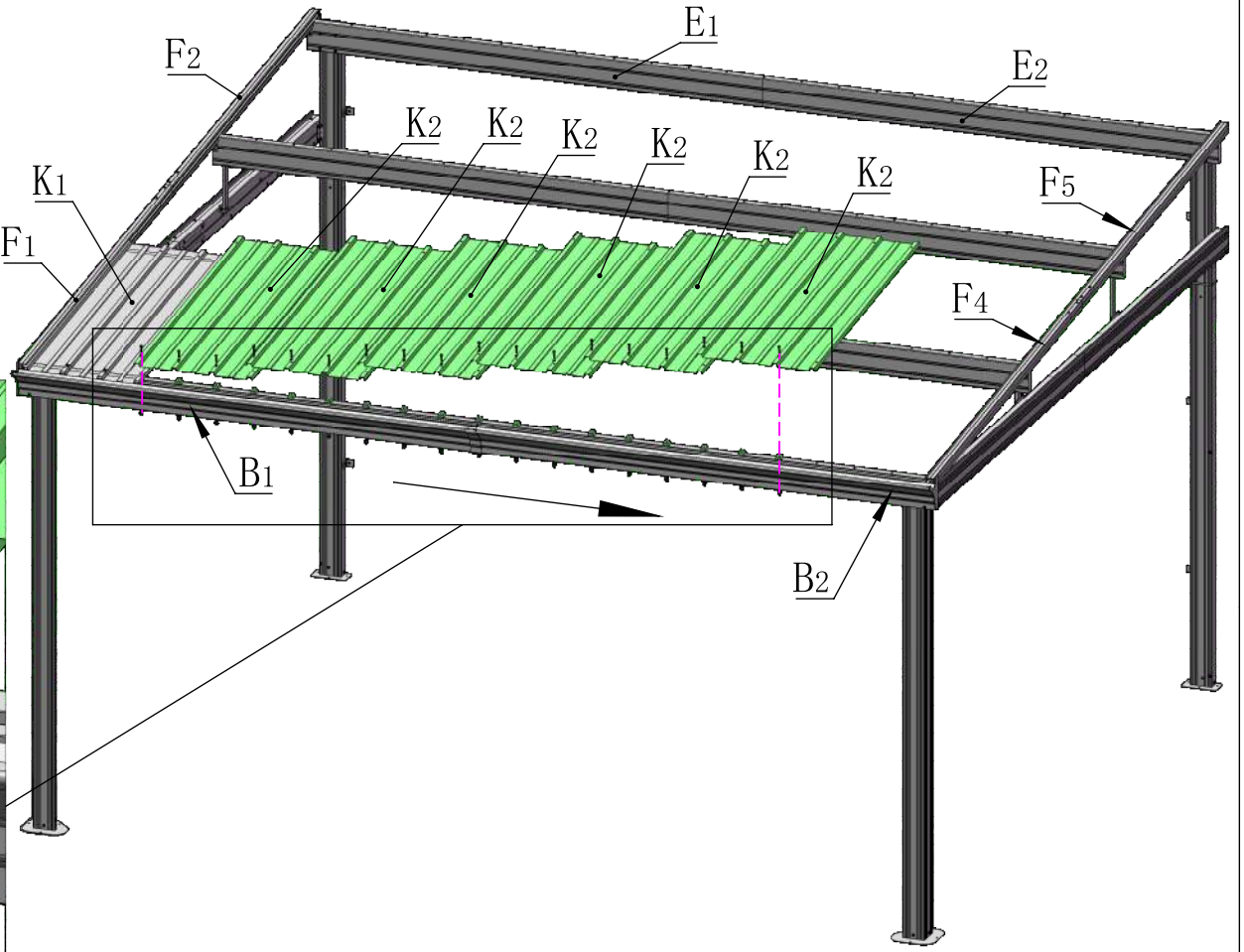

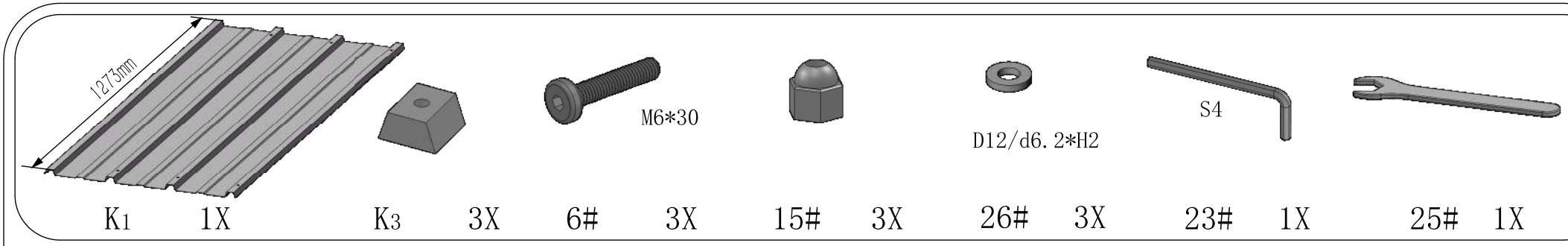

K1 1X K3 3X 6# 3X 15# 3X 26# 3X 23# 1X 25# 1X

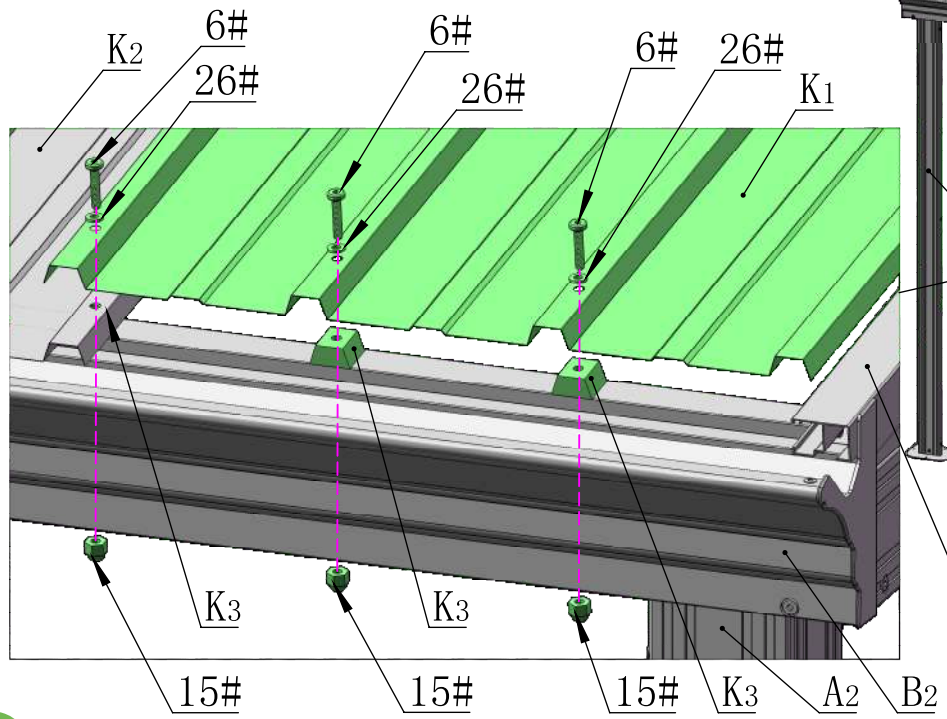

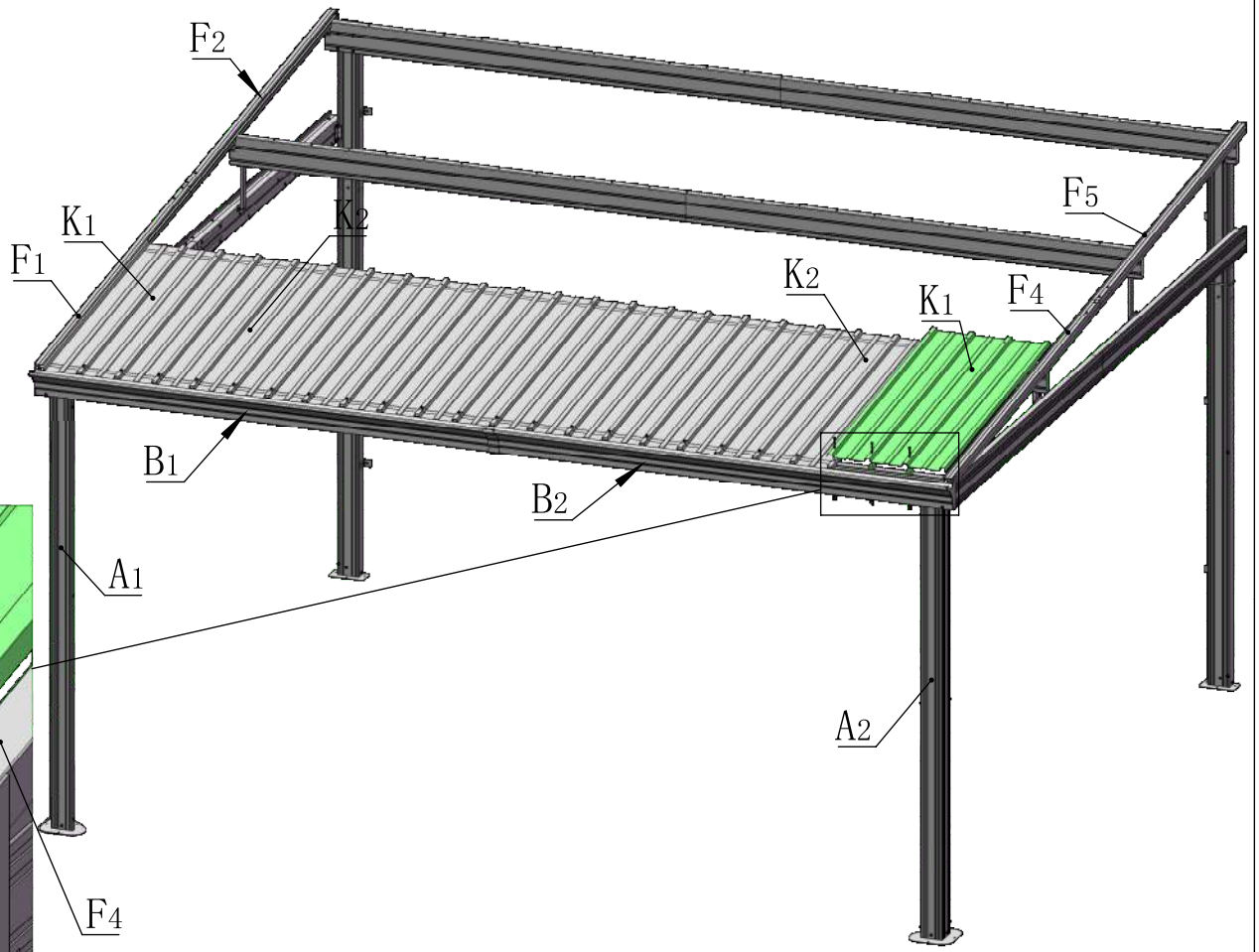

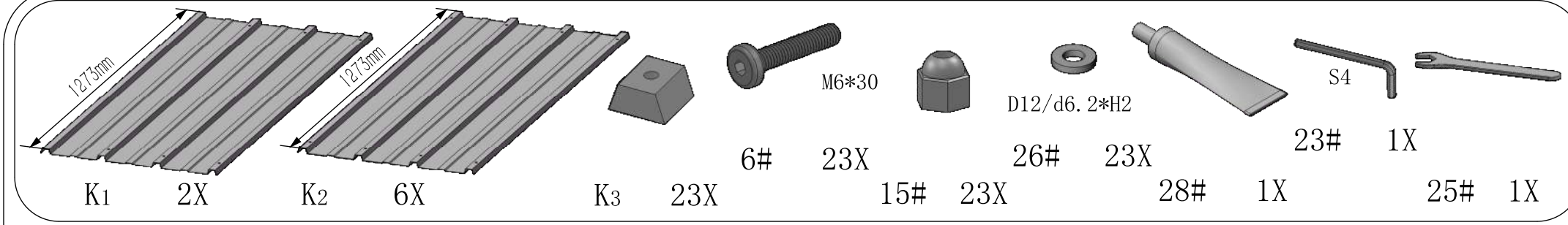

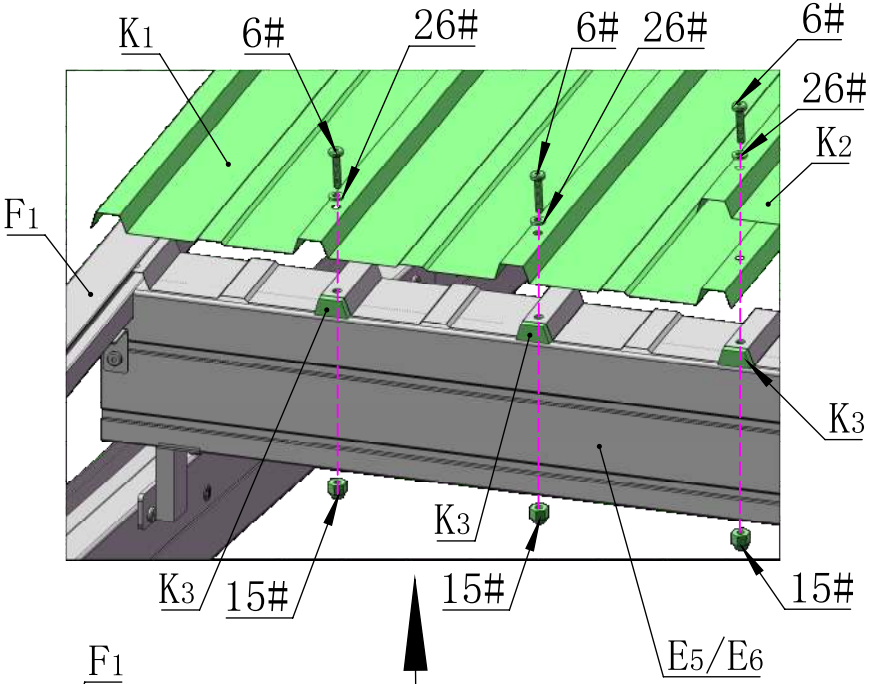

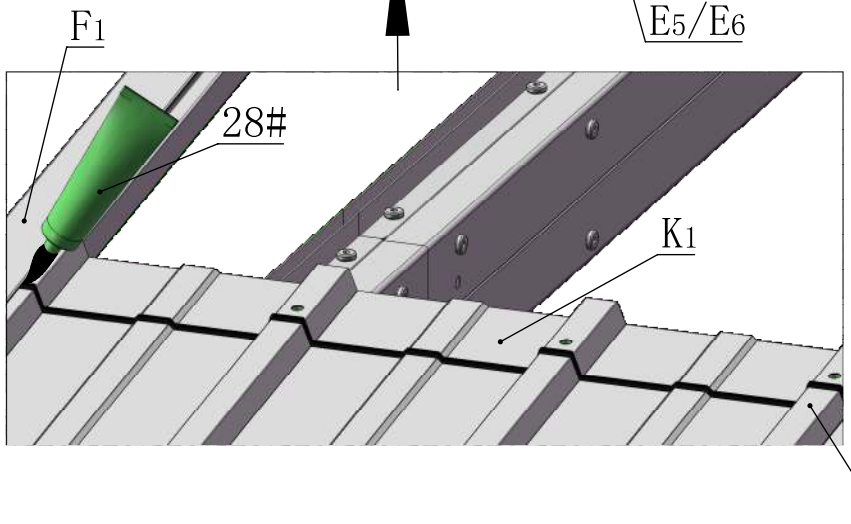

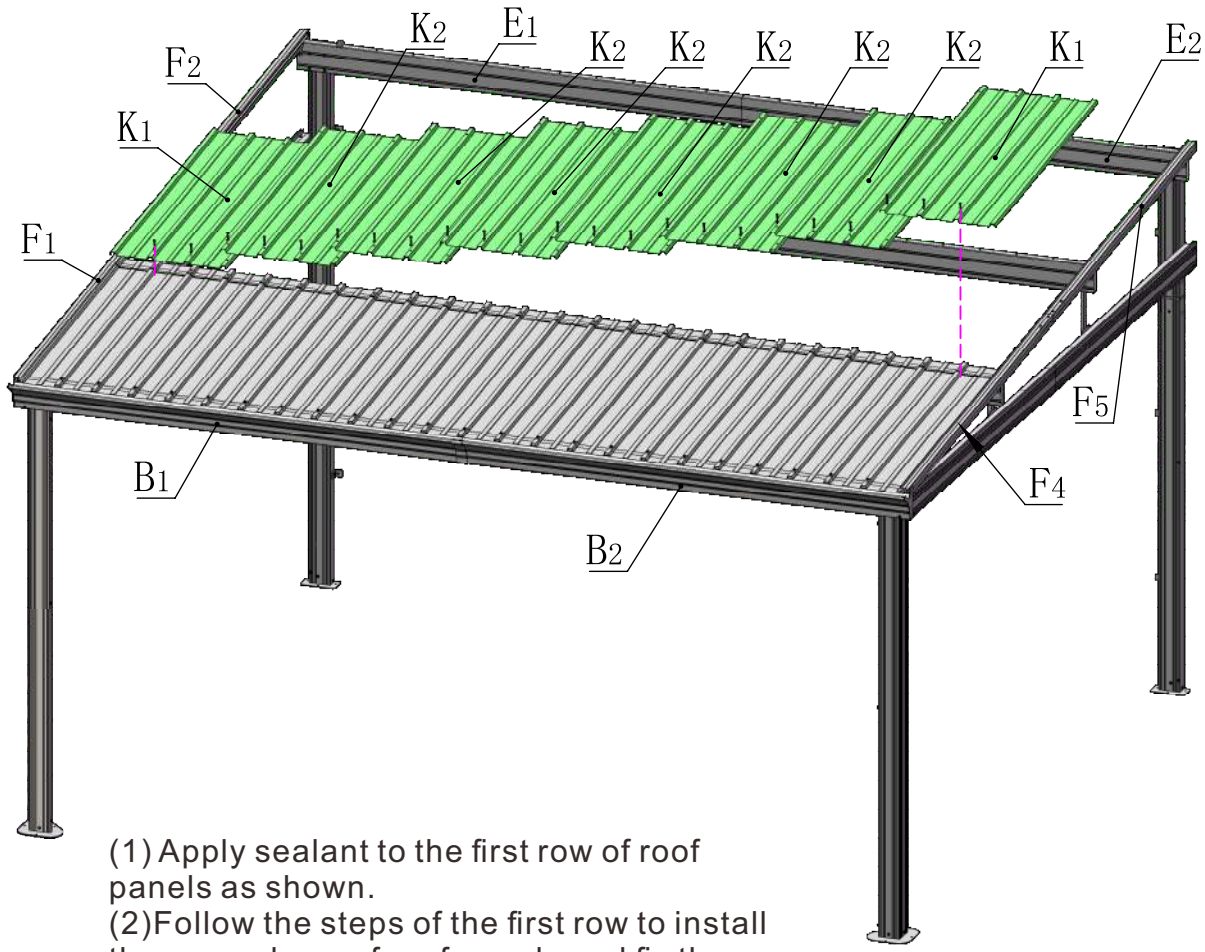

(1) Apply sealant to the first row of roof panels as shown.
(2)Follow the steps of the first row to install the second row of roof panels and fix the screws.

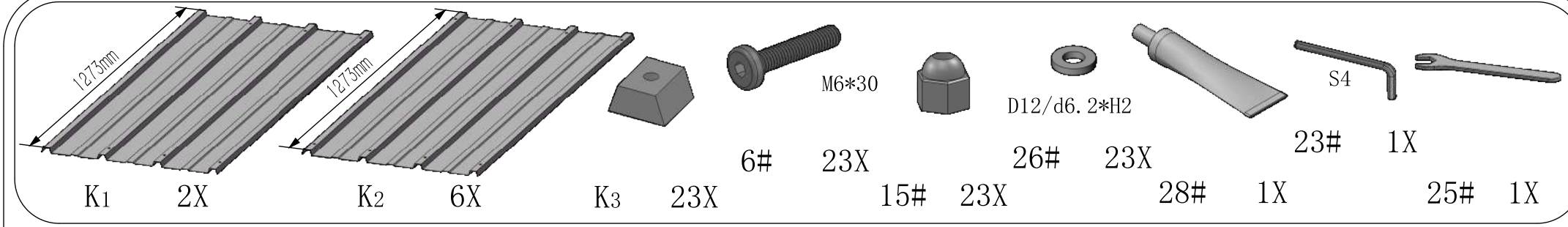

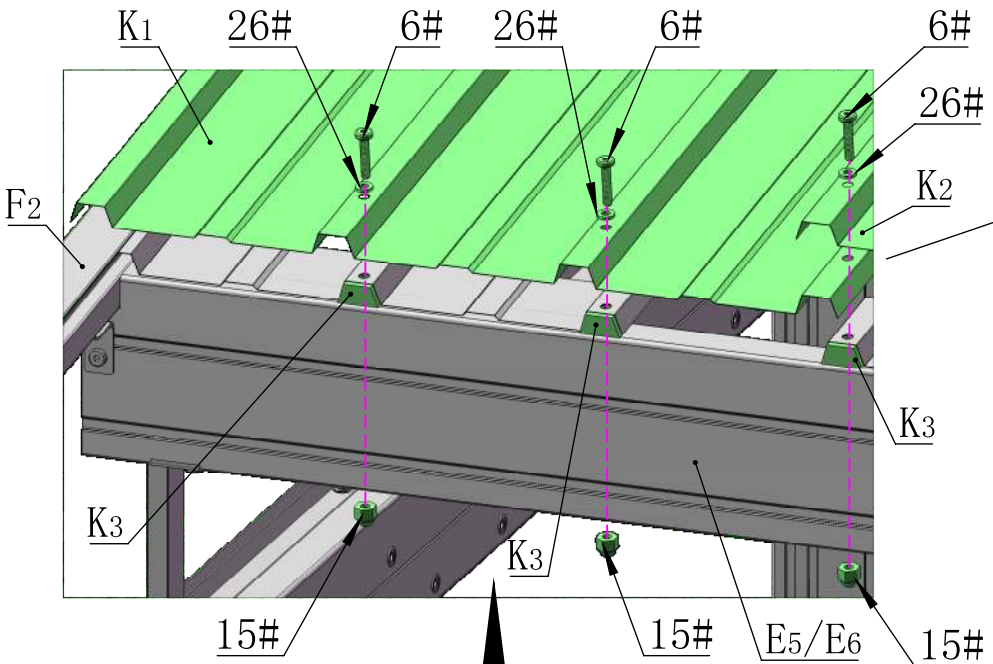

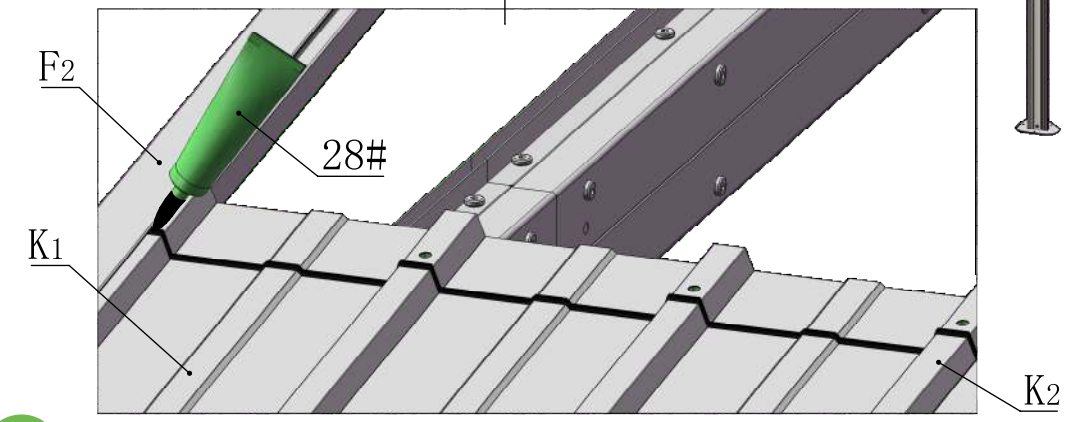

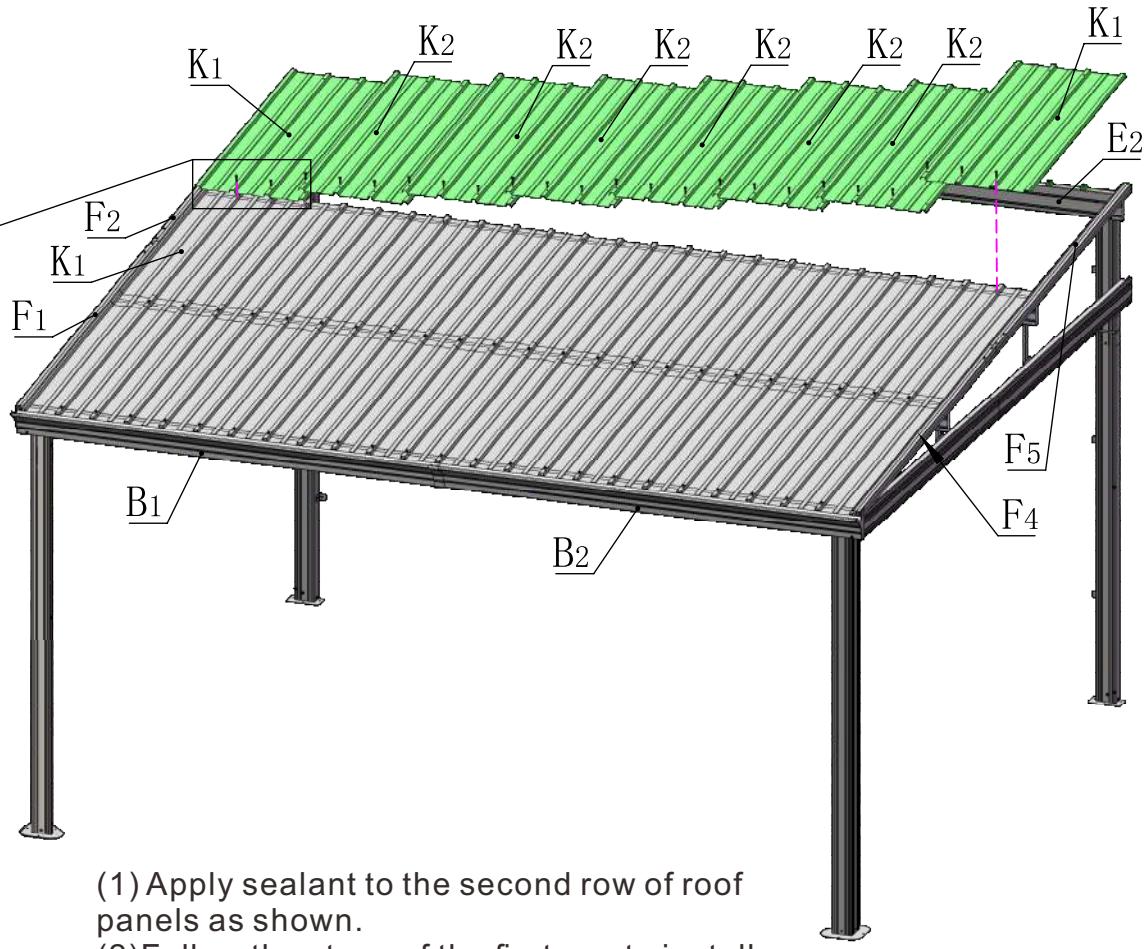

(1) Apply sealant to the second row of roof panels as shown.
(2)Follow the steps of the first row to install the third row of roof panels and fix the screws.

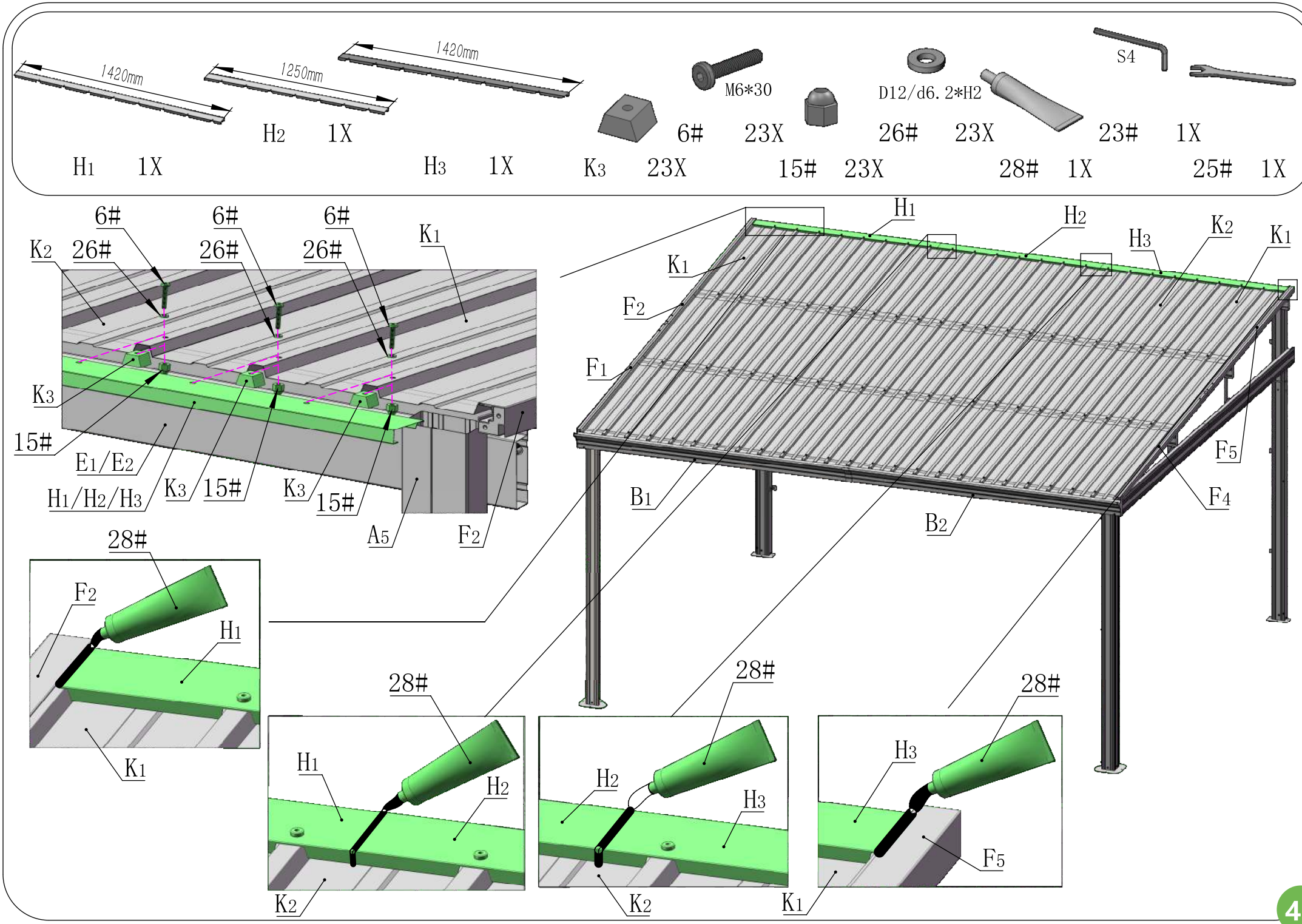
1420mm
H1 1X
1250mm
H2 1X
1420mm
H3 1X
K3 23X
M6*30
15# 23X
D12/d6.2*H2
26# 23X
28# 1X
S4
23# 1X
25# 1X
6#
6#
6#
K1
K2
26#
26#
26#
K3
15#
E1/E2
H1/H2/H3
K3
15#
K3
15#
A5
F2
H1
K1
F2
F1
B1
B2
H2
H3
K2
K1
F5
F4
28#
F2
H1
K1
28#
H1
H2
K2
28#
H2
H3
K2
28#
H3
F5
K1

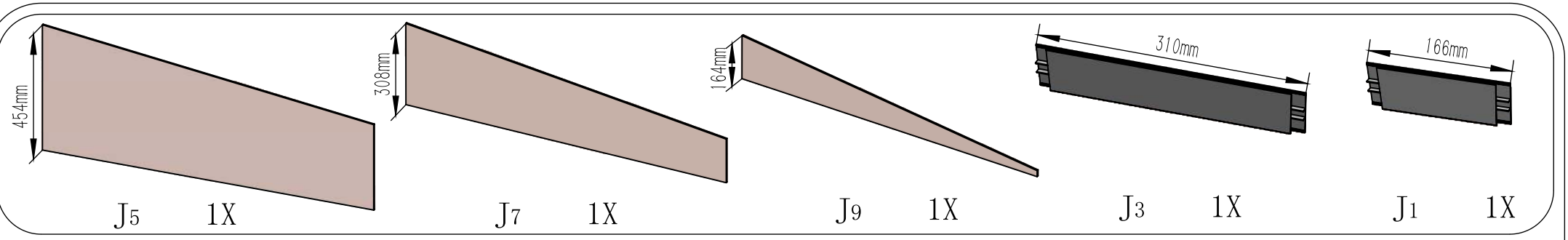

The notch of #J1 & J3 is facing inward.

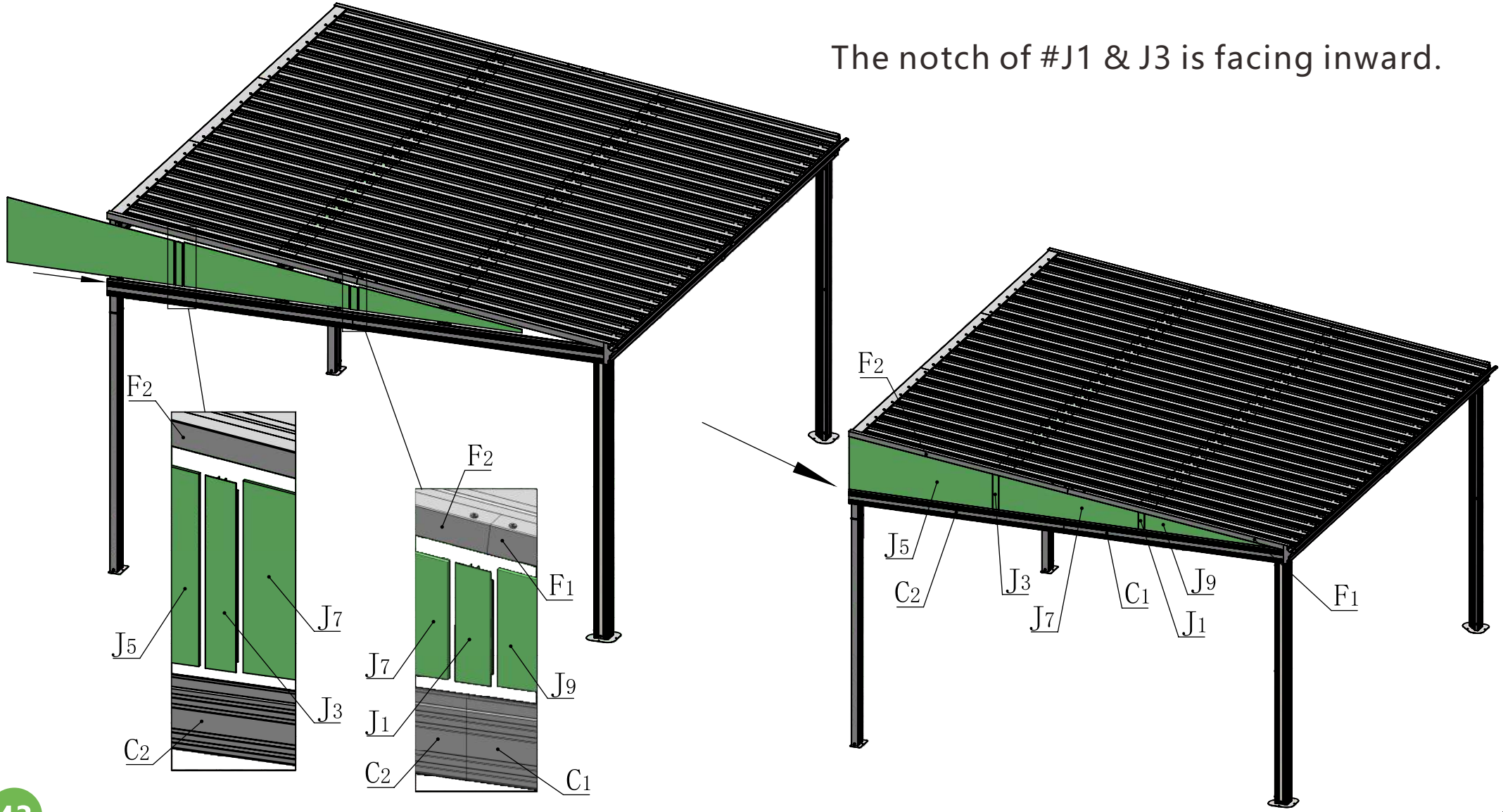

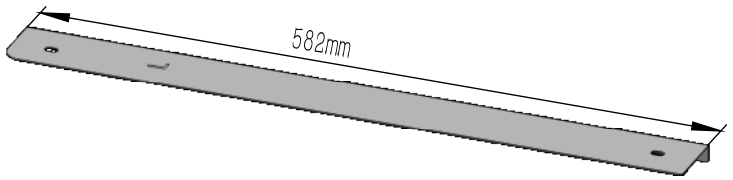

G1 1X

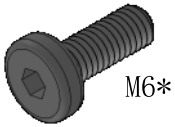

4# 2X

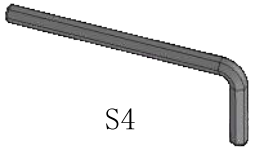

23# 1X

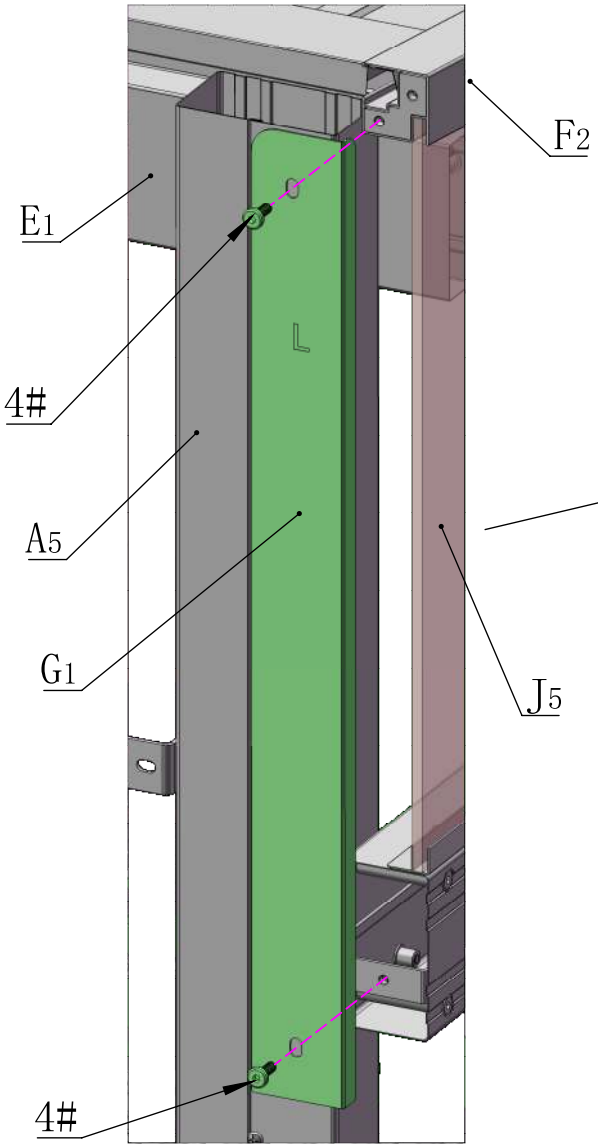

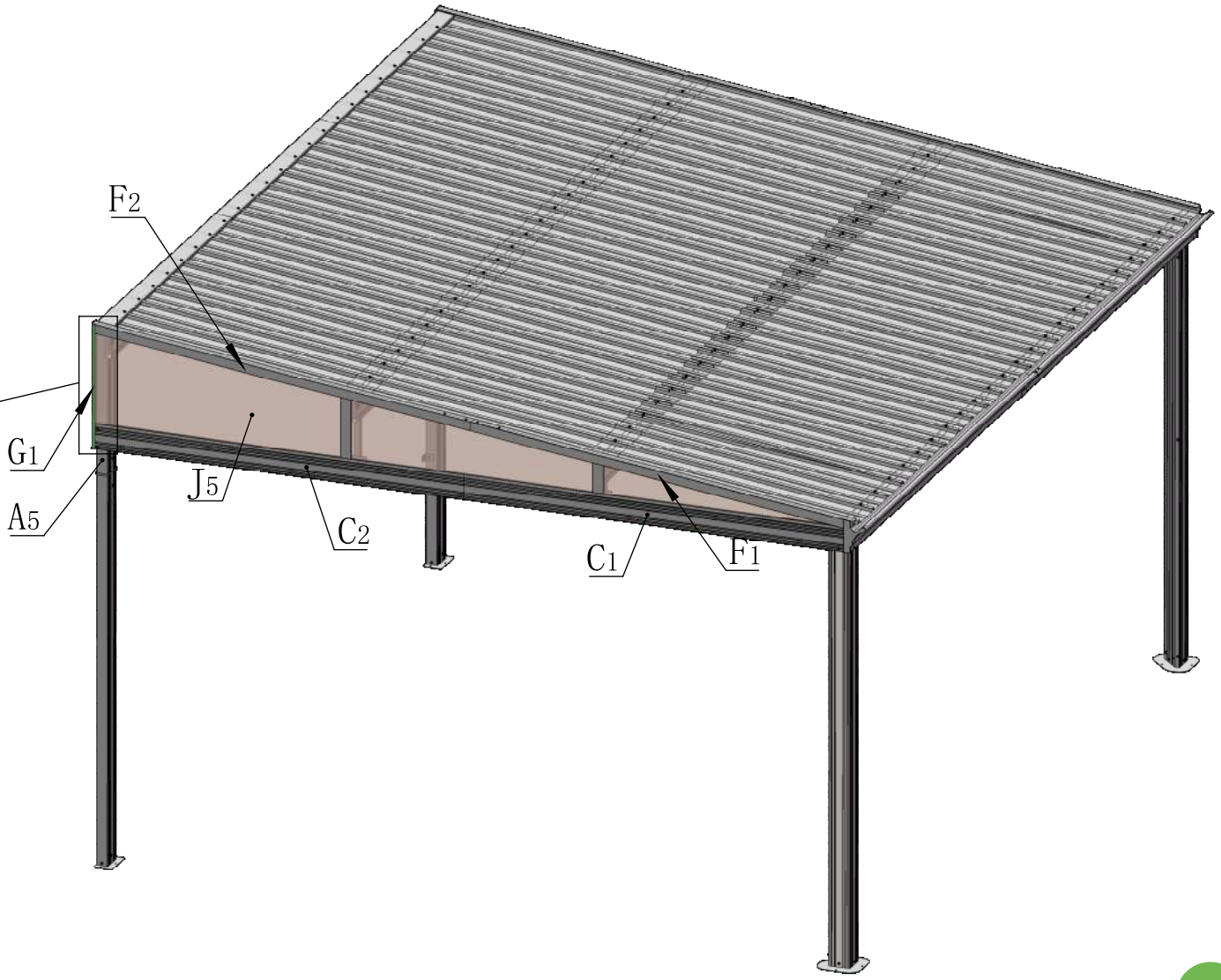

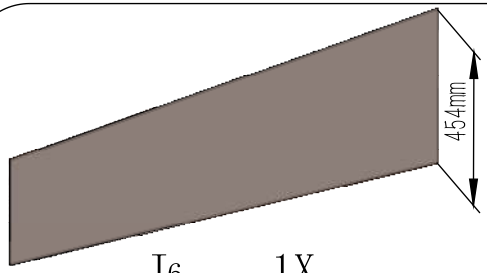

J6 1X

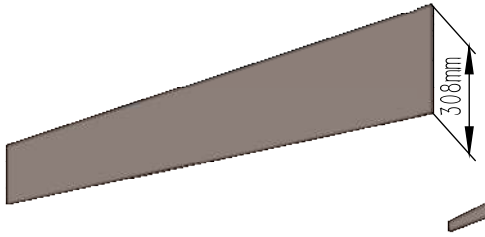

J8 1X

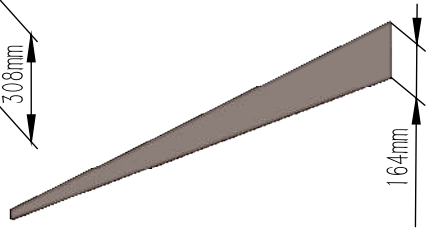

J10 1X

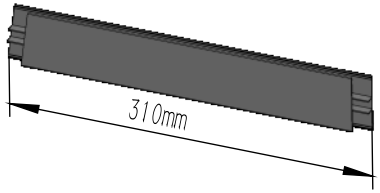

J4 1X

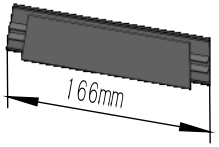

J2 1X

The notch of #J2 & J4 is facing inward.

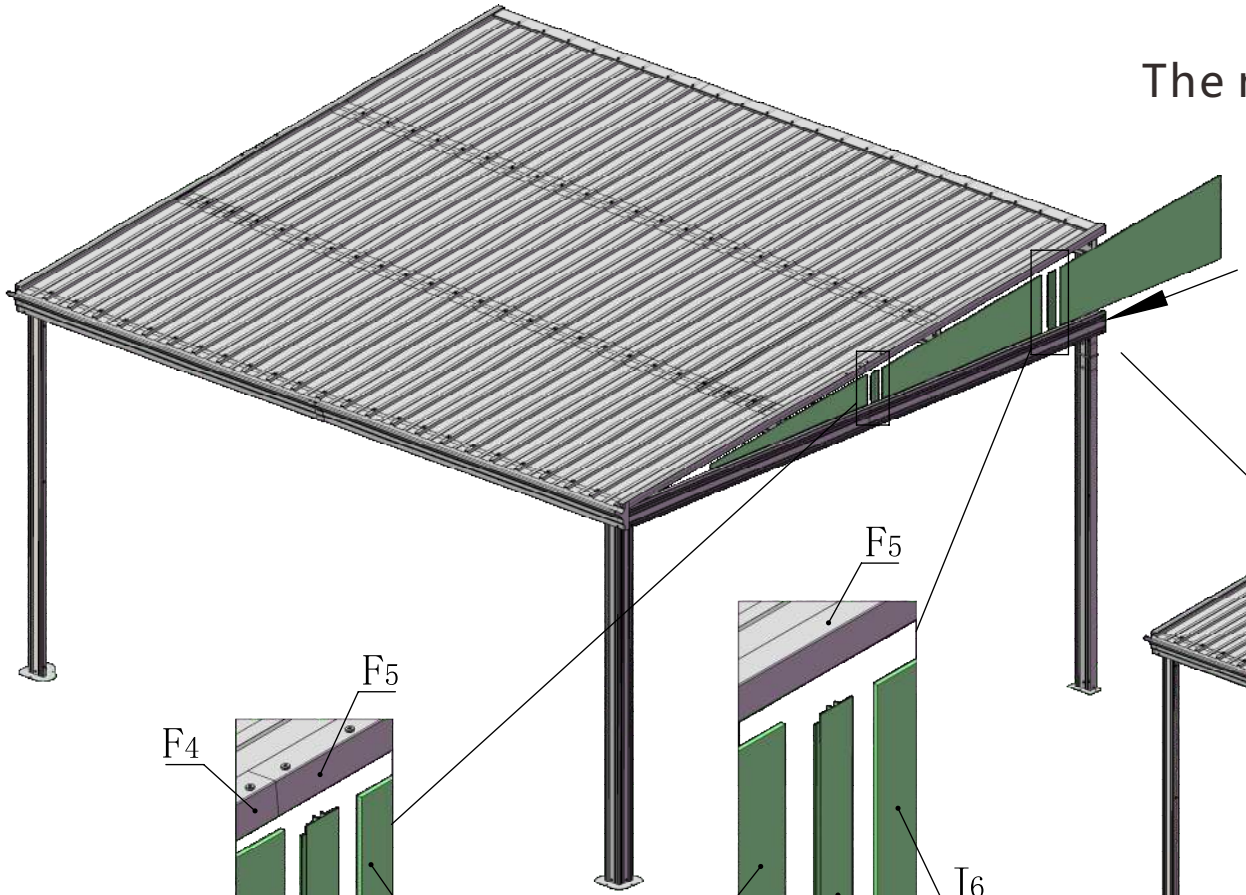

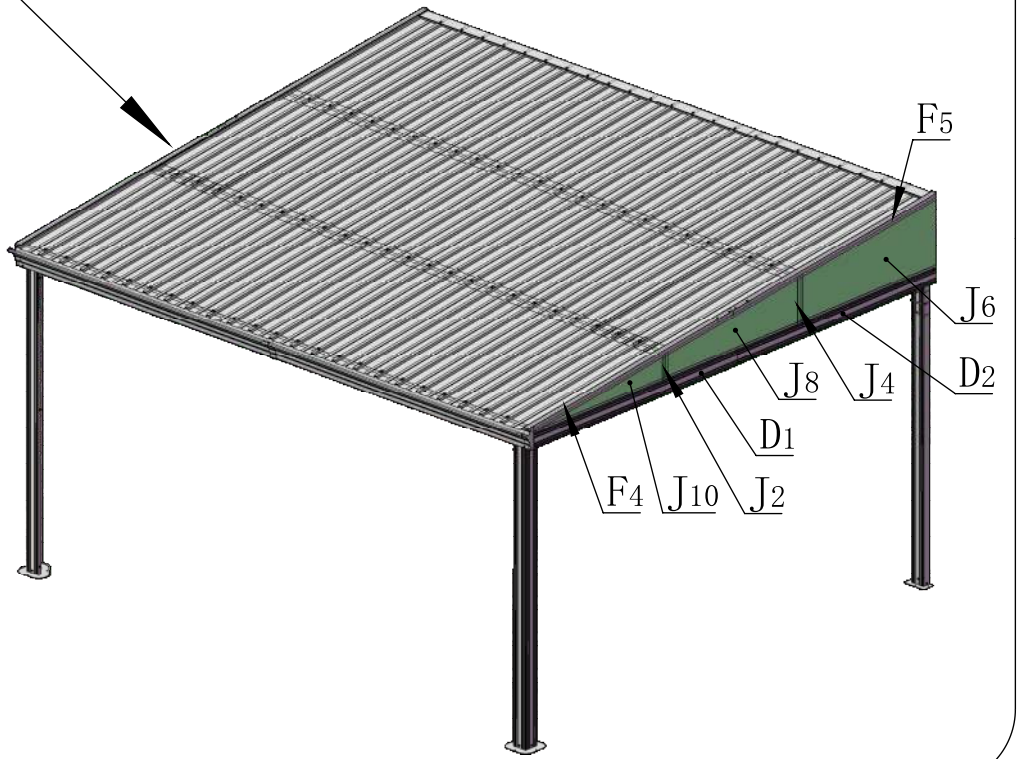

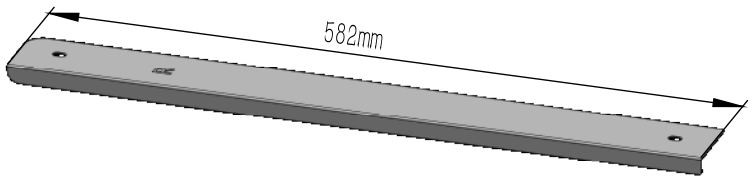

G2 1X

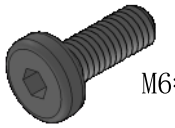

4# 2X

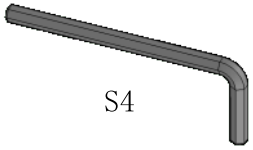

23# 1X

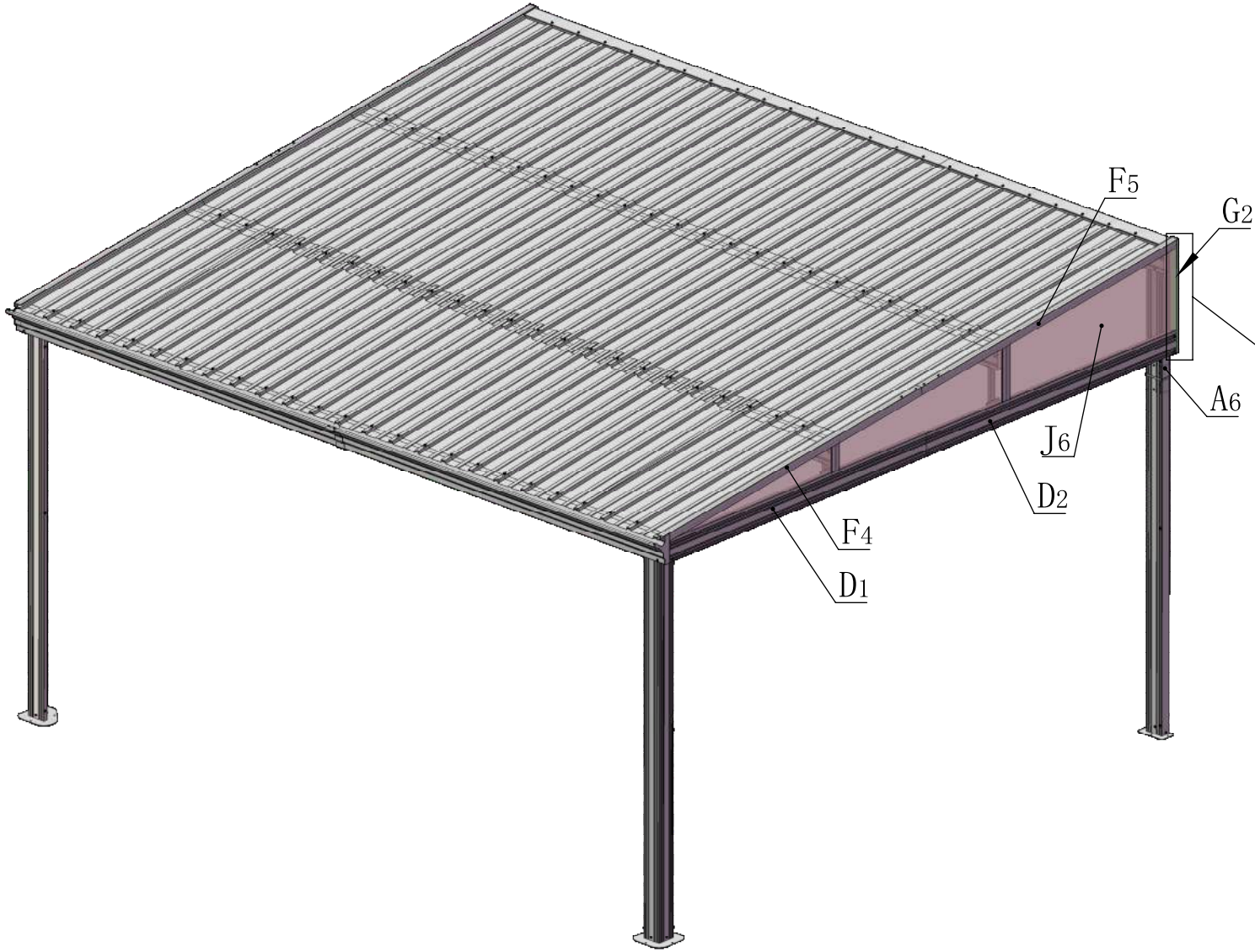

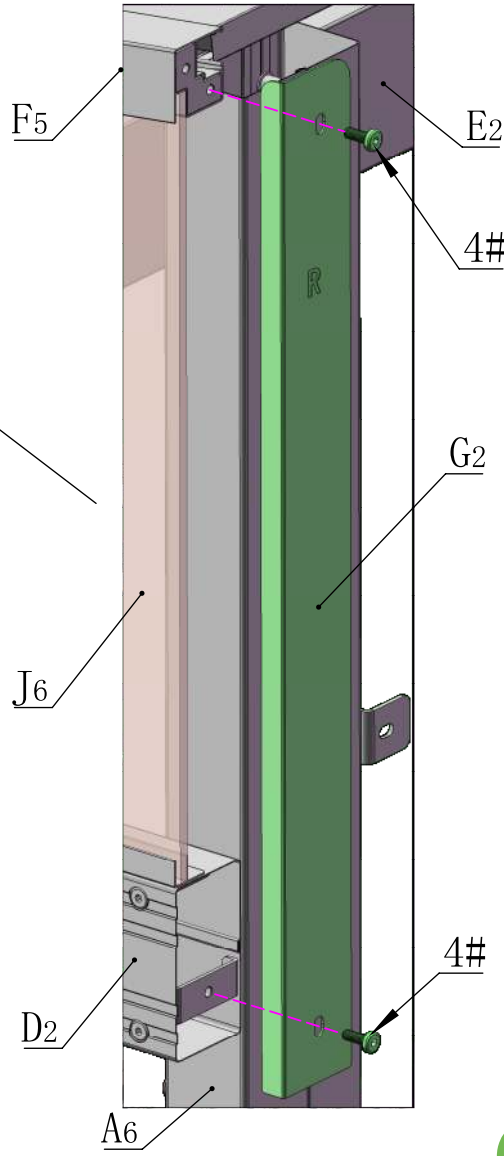

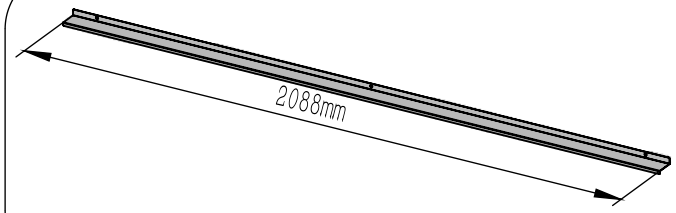

H4 2X



10# 6X



11# 6X



28# 1X

If you don't consider fixing it to the wall, you can skip this step. (This step requires the user to drill holes in the wall.)

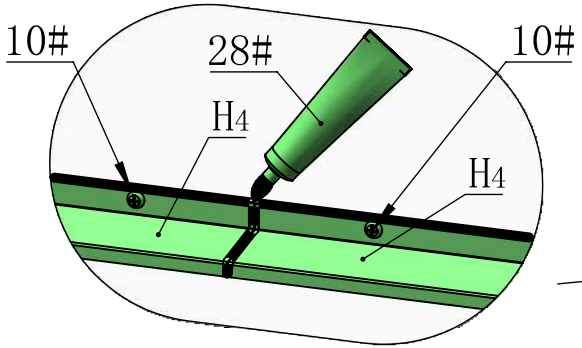

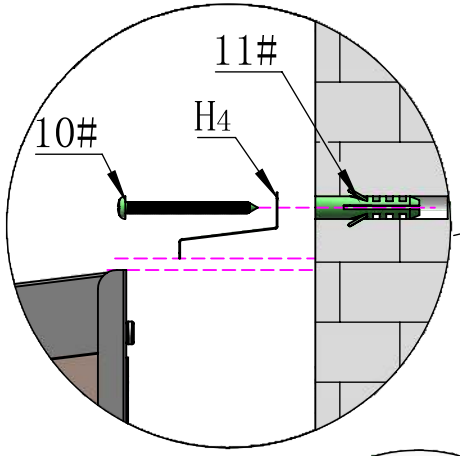

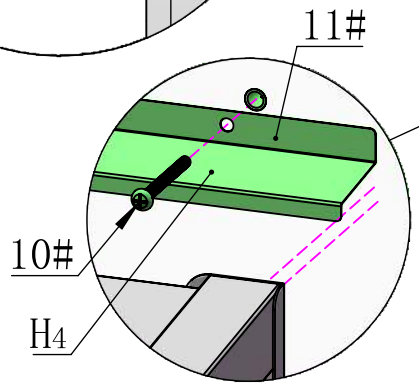

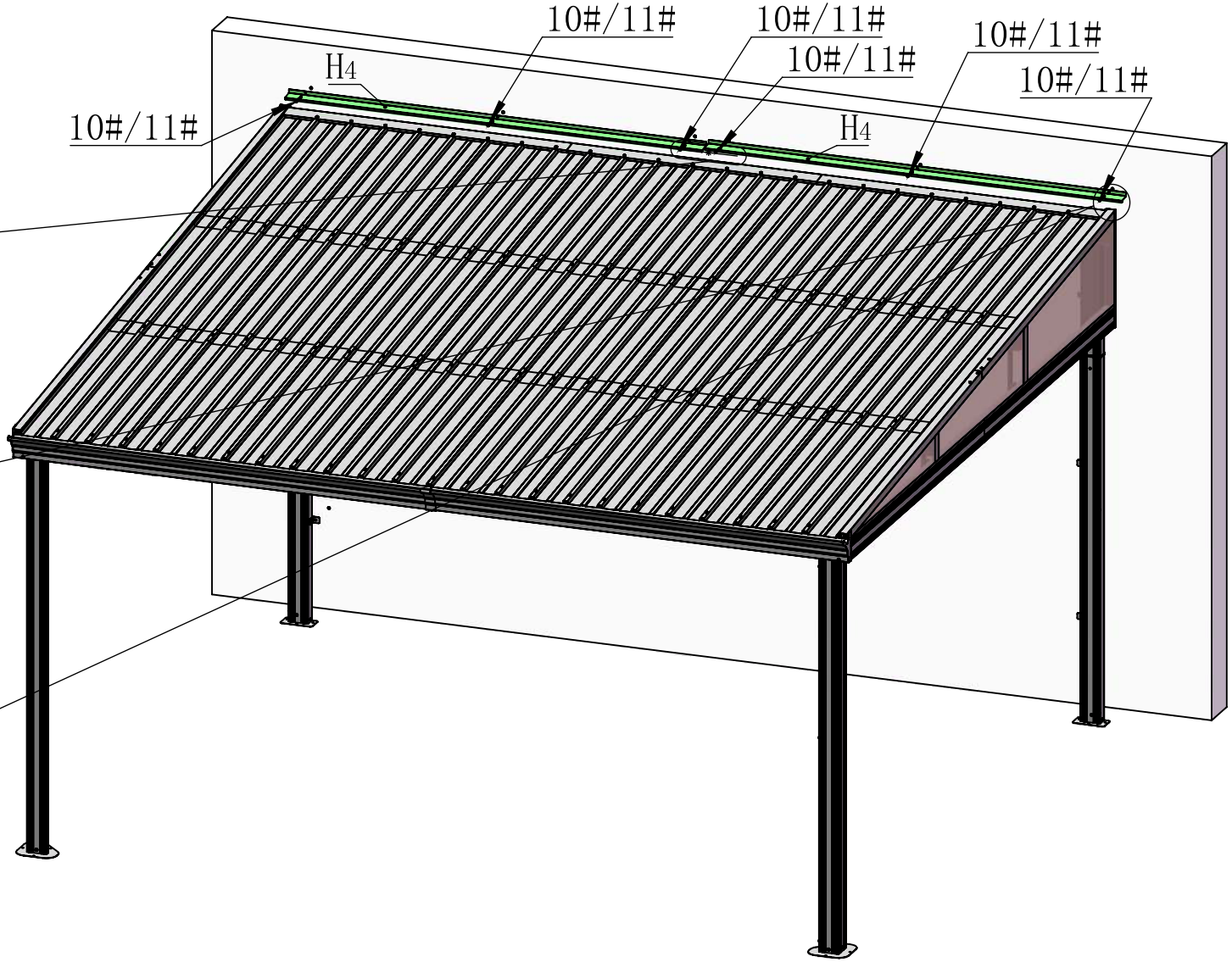

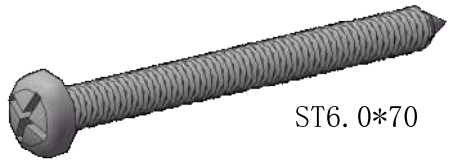

10# 8X



11# 8X

(1) If you don't consider fixing it to the wall, you can skip this step. (This step requires the user to drill holes in the wall for fixation.) (2) The bracket #A9 is used to fix the post against the wall. You can assemble only 2 pieces for each post according to the actual installation situation。

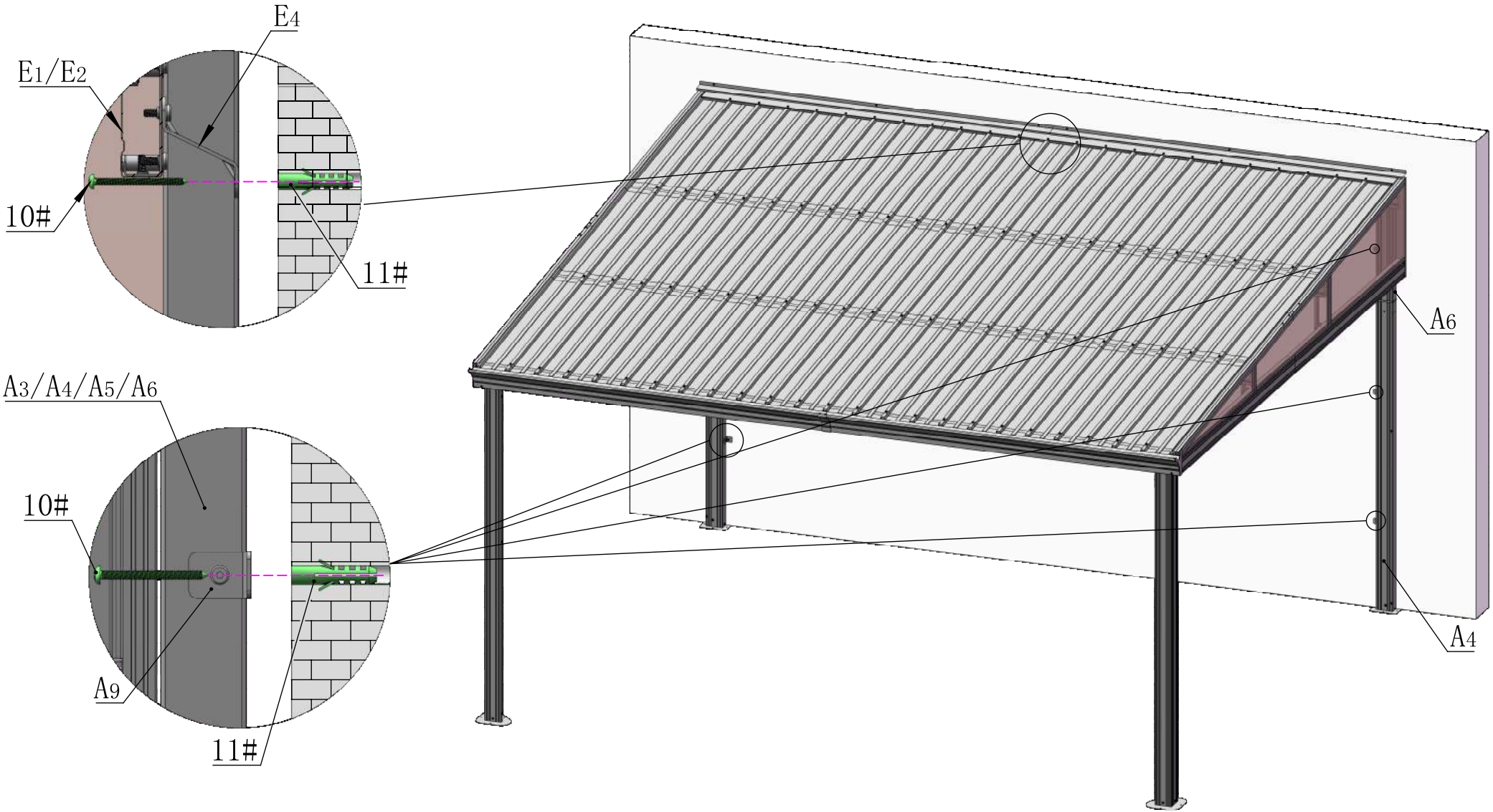

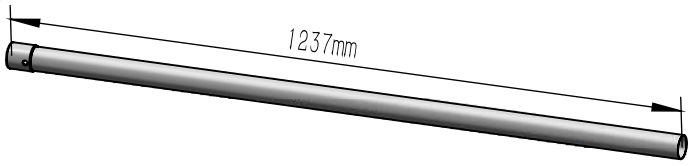

L2 2X

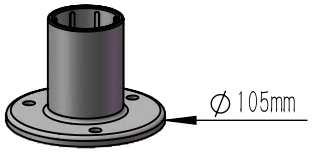

L3 2X

Support Tube Assembly

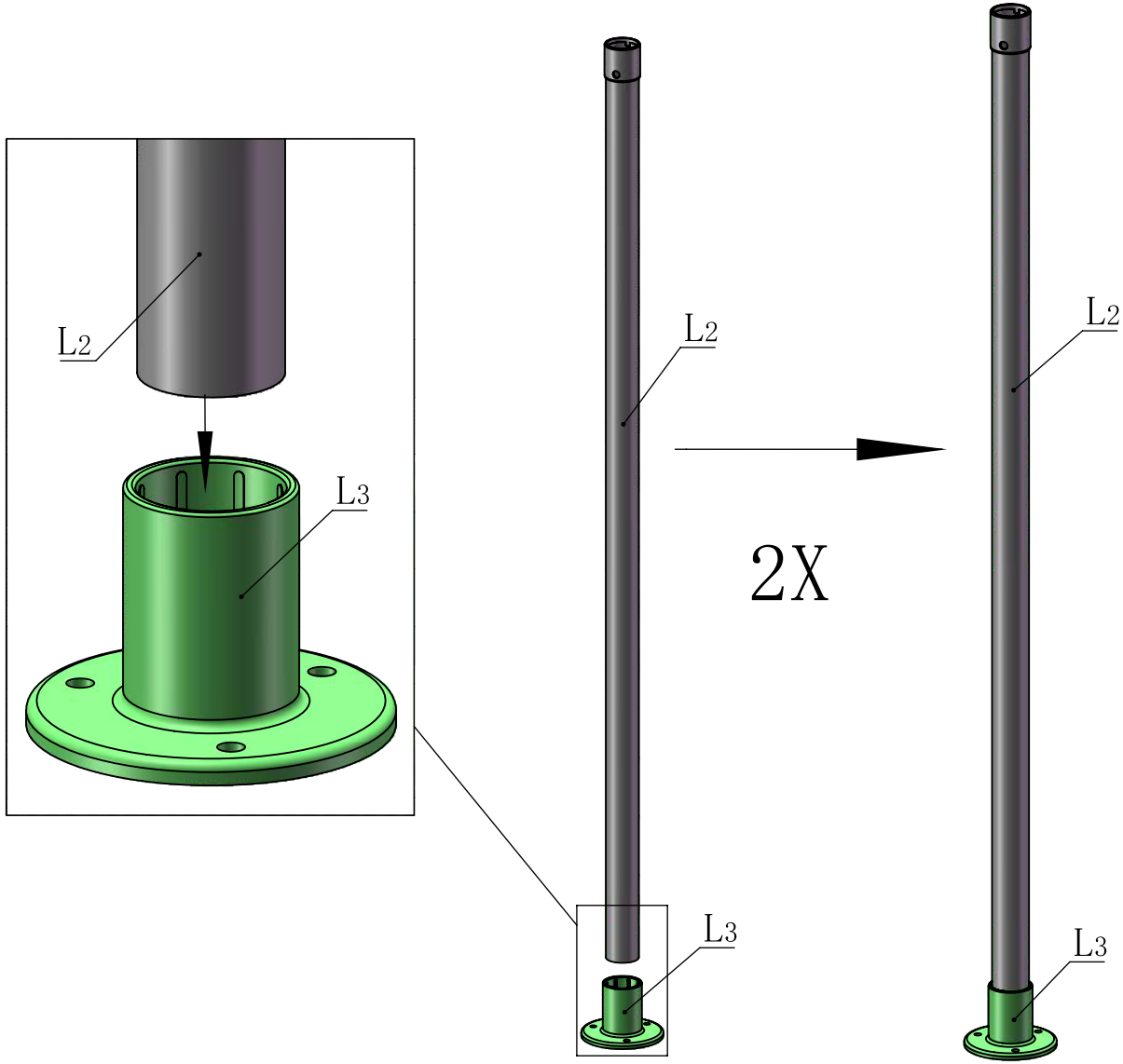

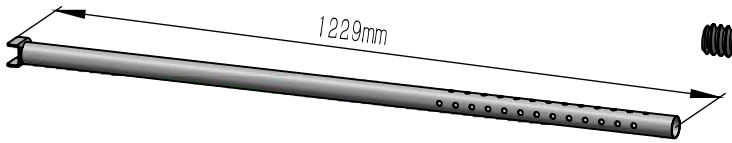

L1 2X

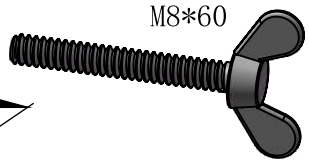

12# 2X



13# 2X

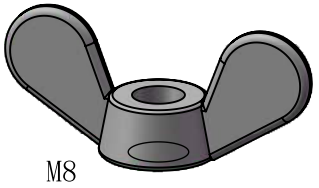

14# 2X

Adjust the length of the support tubes according to the slope.

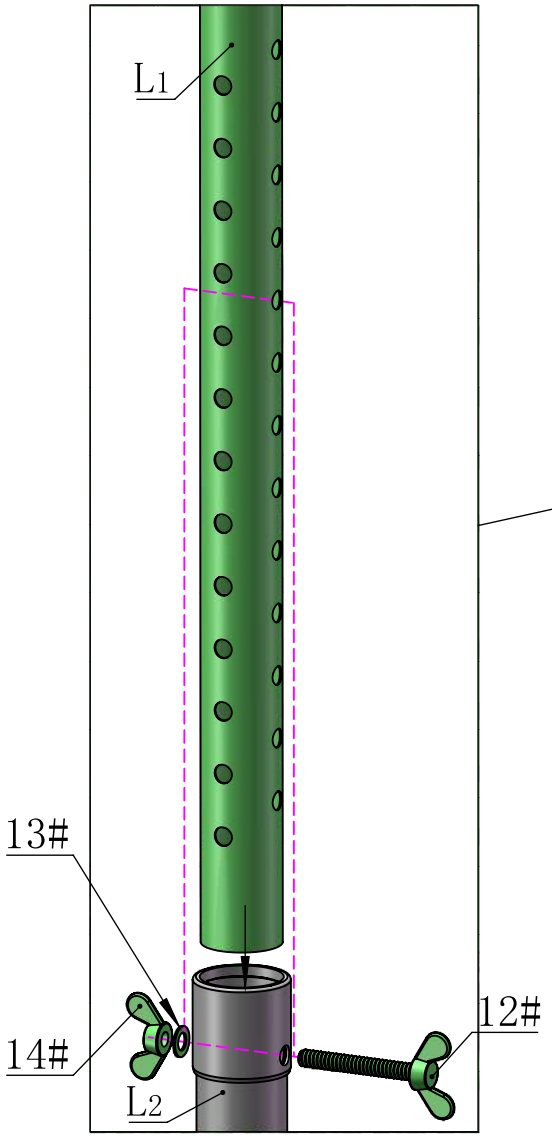

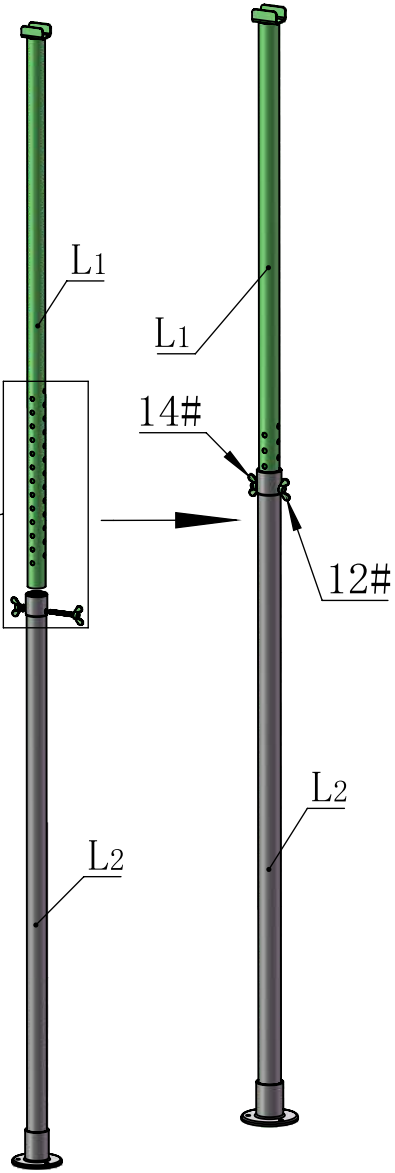

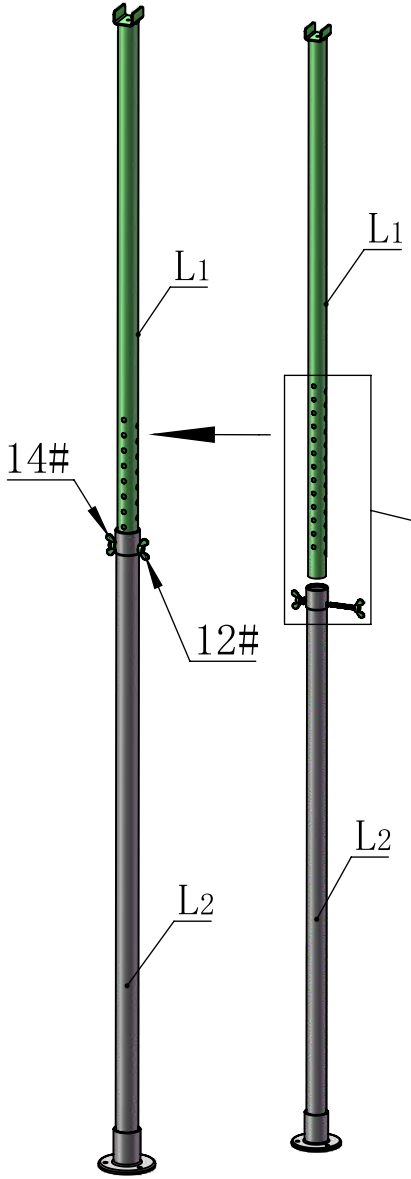

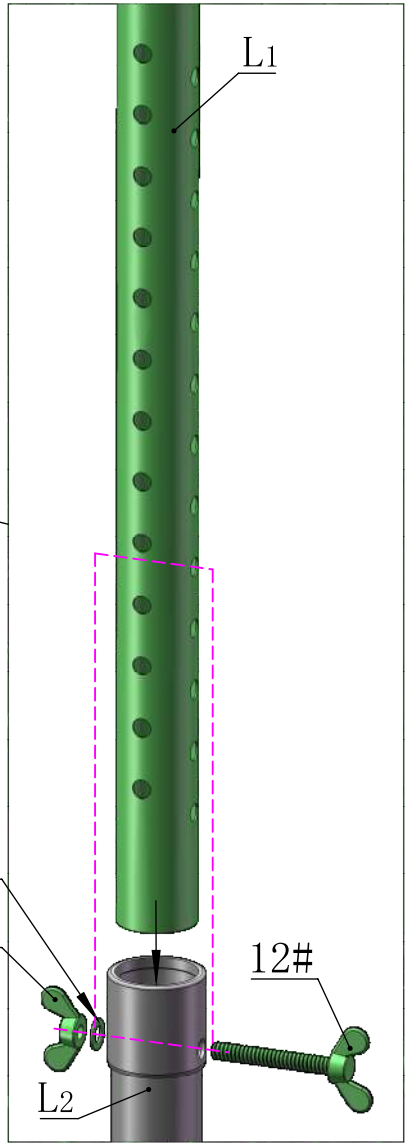

The support tube can strengthen the weight capacity of the metal roof. In bad weather, especially snowstorm, it is essentially needed to prevent the roof from collapsing under heavy snow; in daily life, you can put it away.

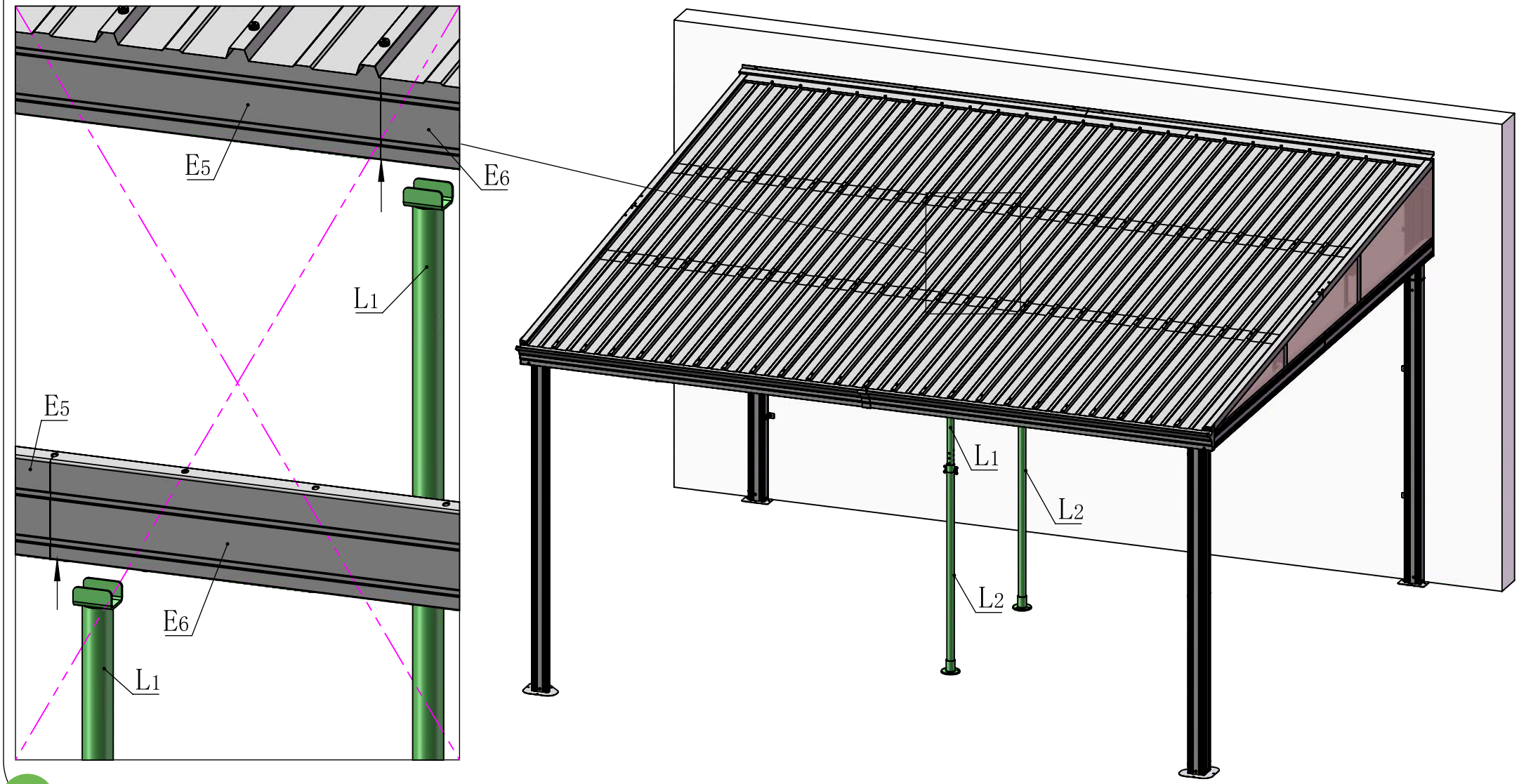

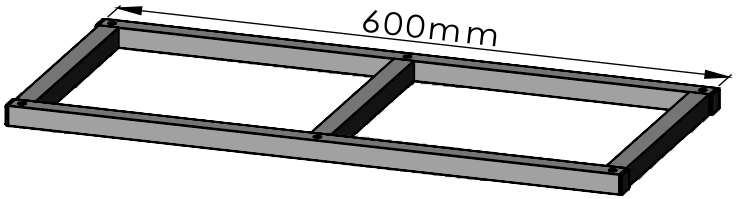

M1 6X

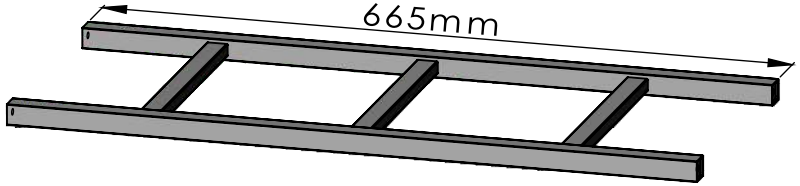

M2 3X



6# 12X

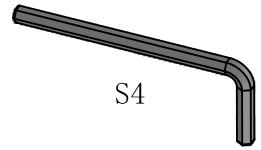

23# 1X

3X

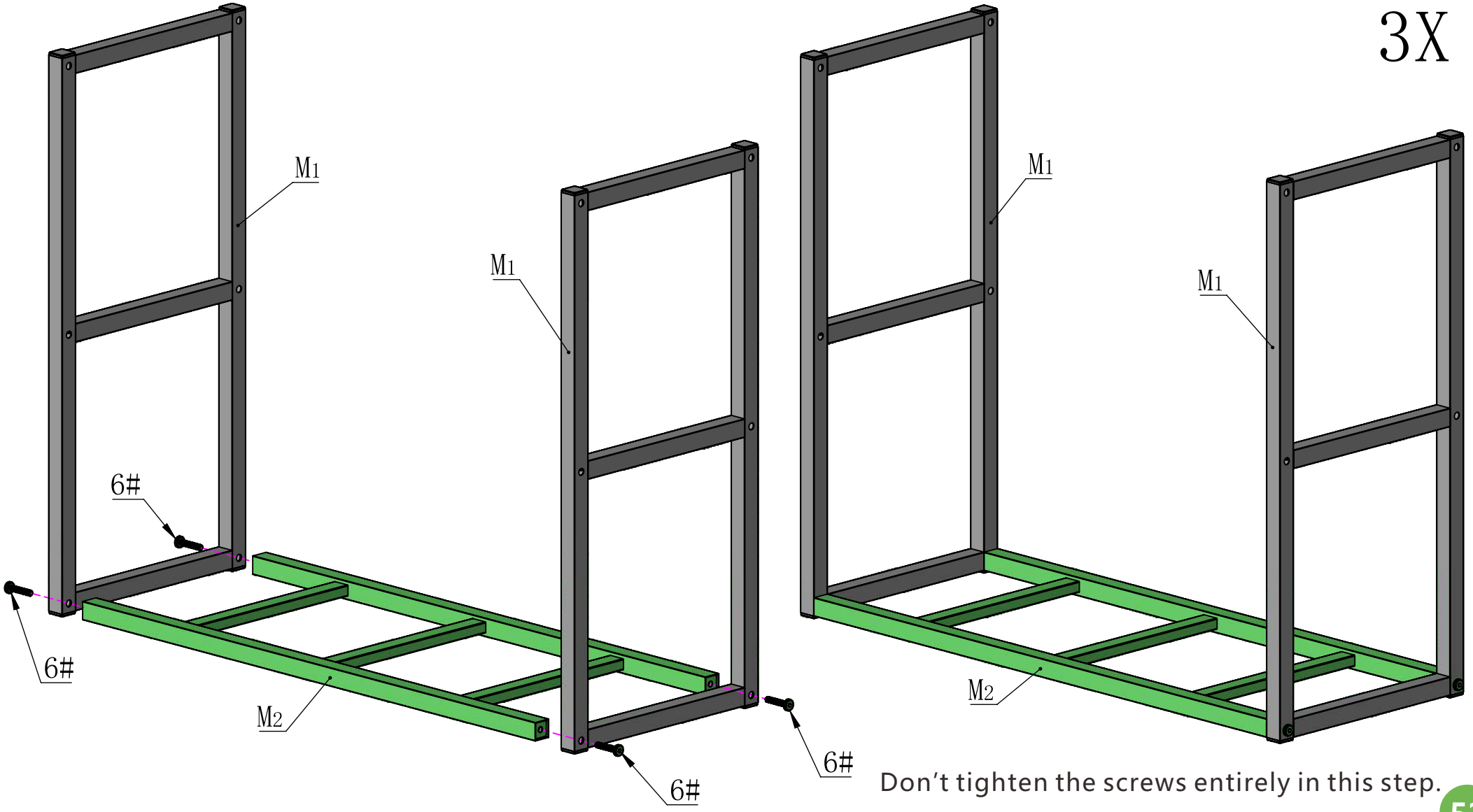

Don't tighten the screws entirely in this step.

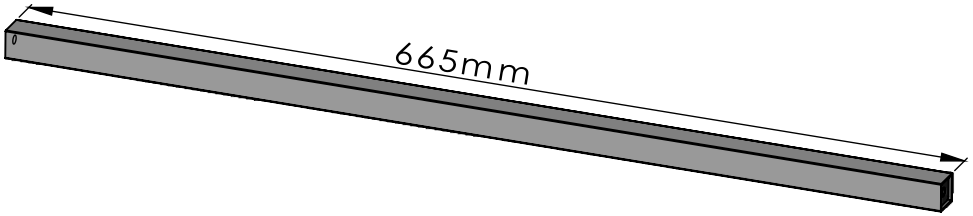

M3 12X

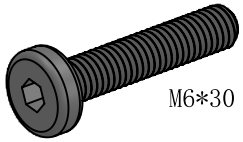

6# 24X

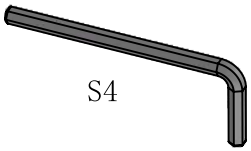

23# 1X

3X

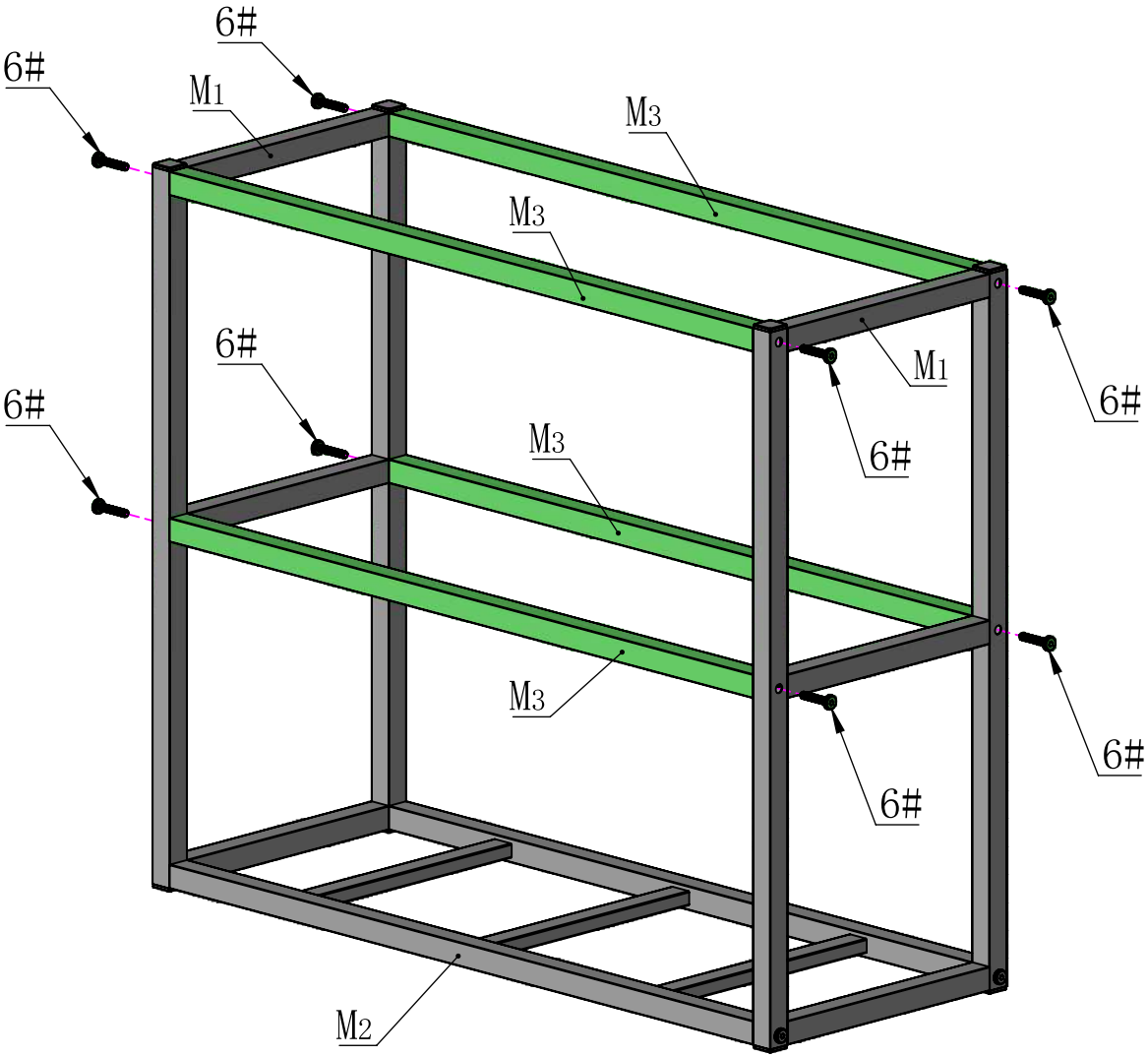

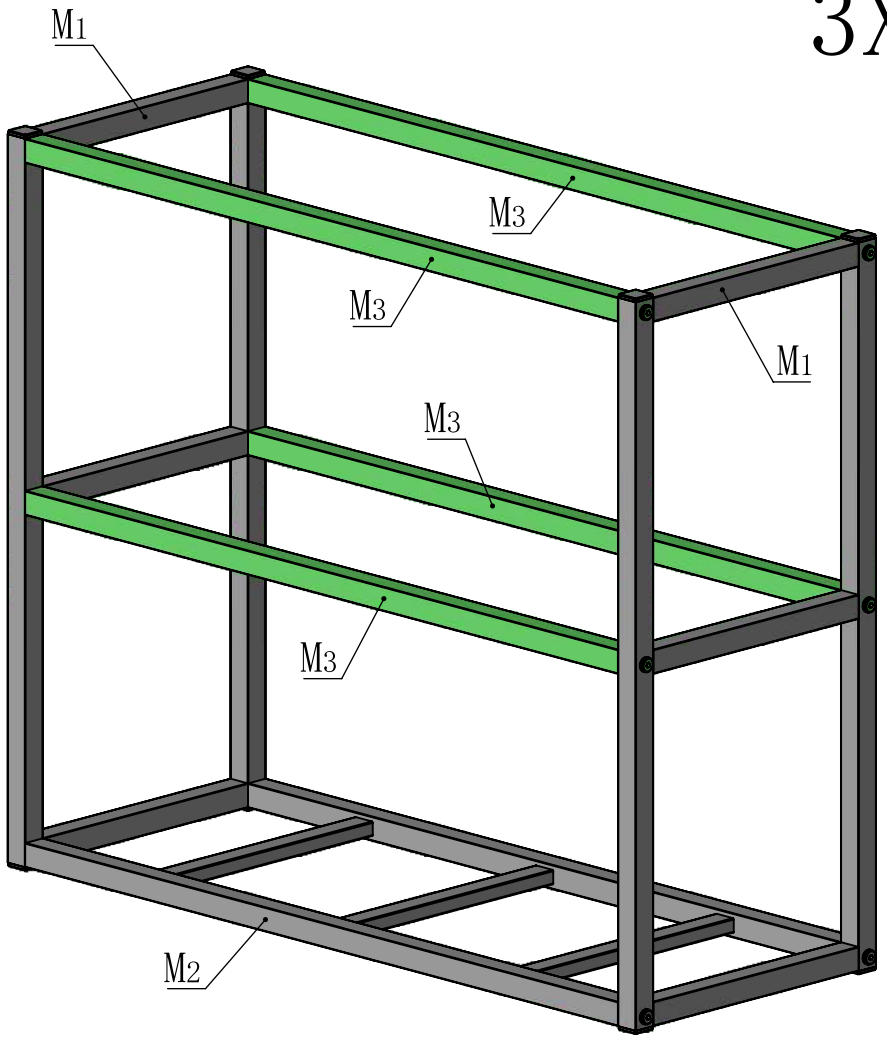

Tighten all screws entirely in this step.

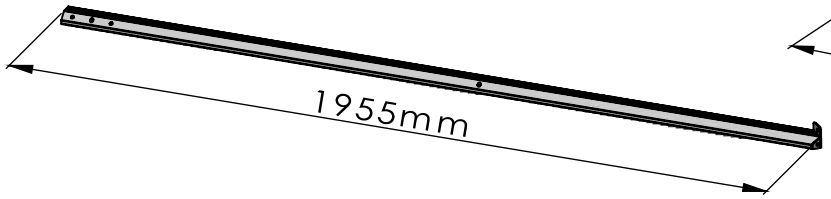

N1 1X

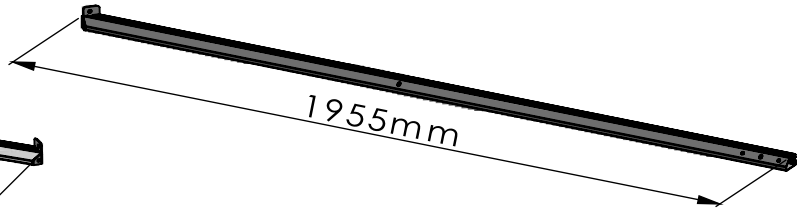

N2 1X

Metal Square Nuts



21# 8X

Base Frame Assembly

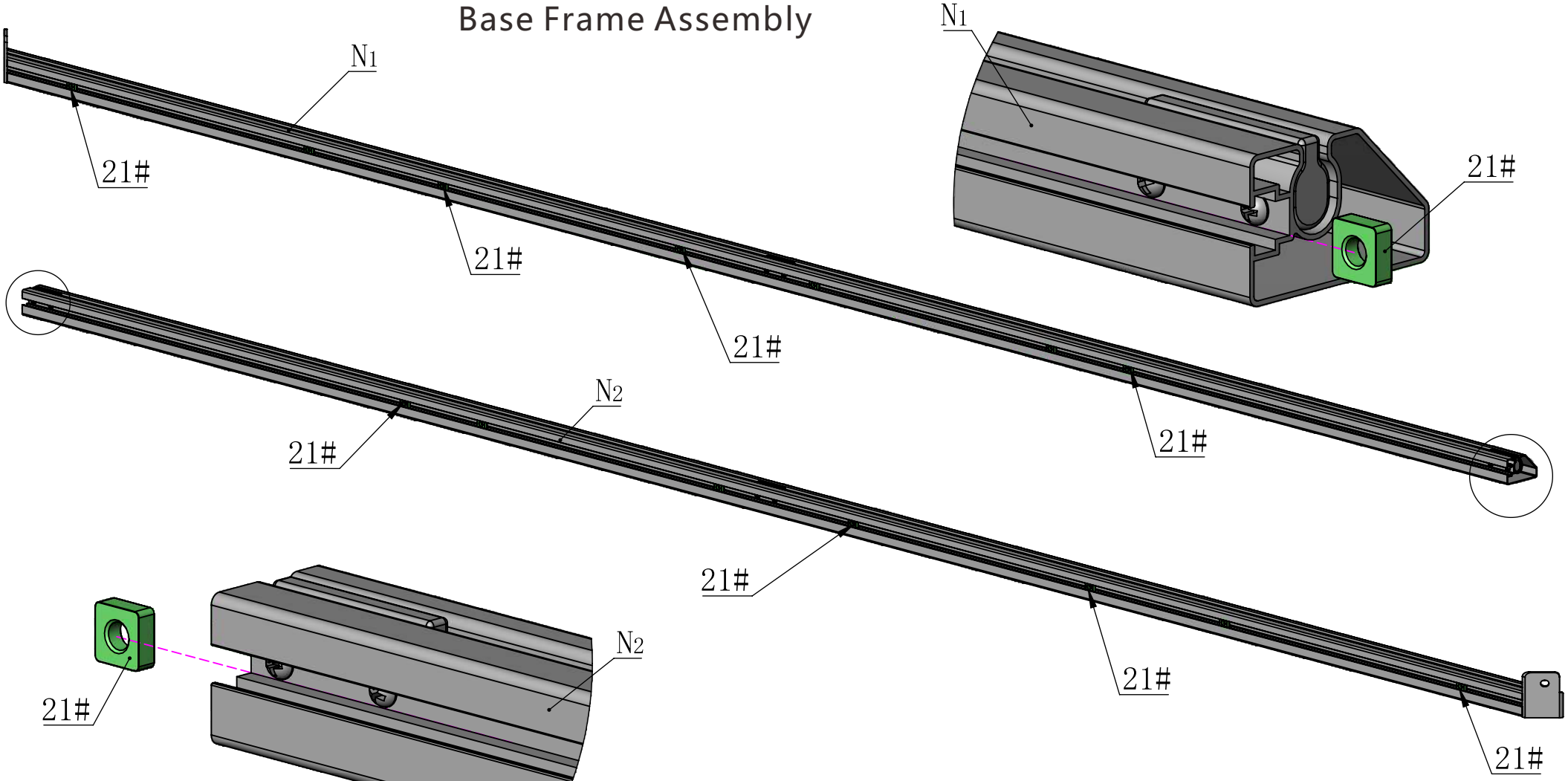

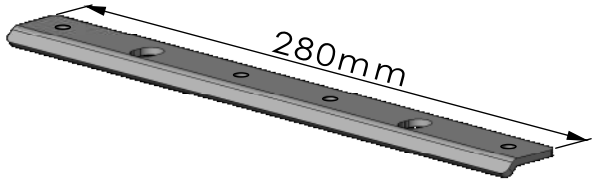

N3 1X

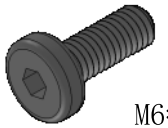

M6*16

4# 4X

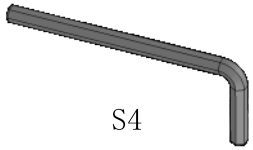

S4

23# 1X

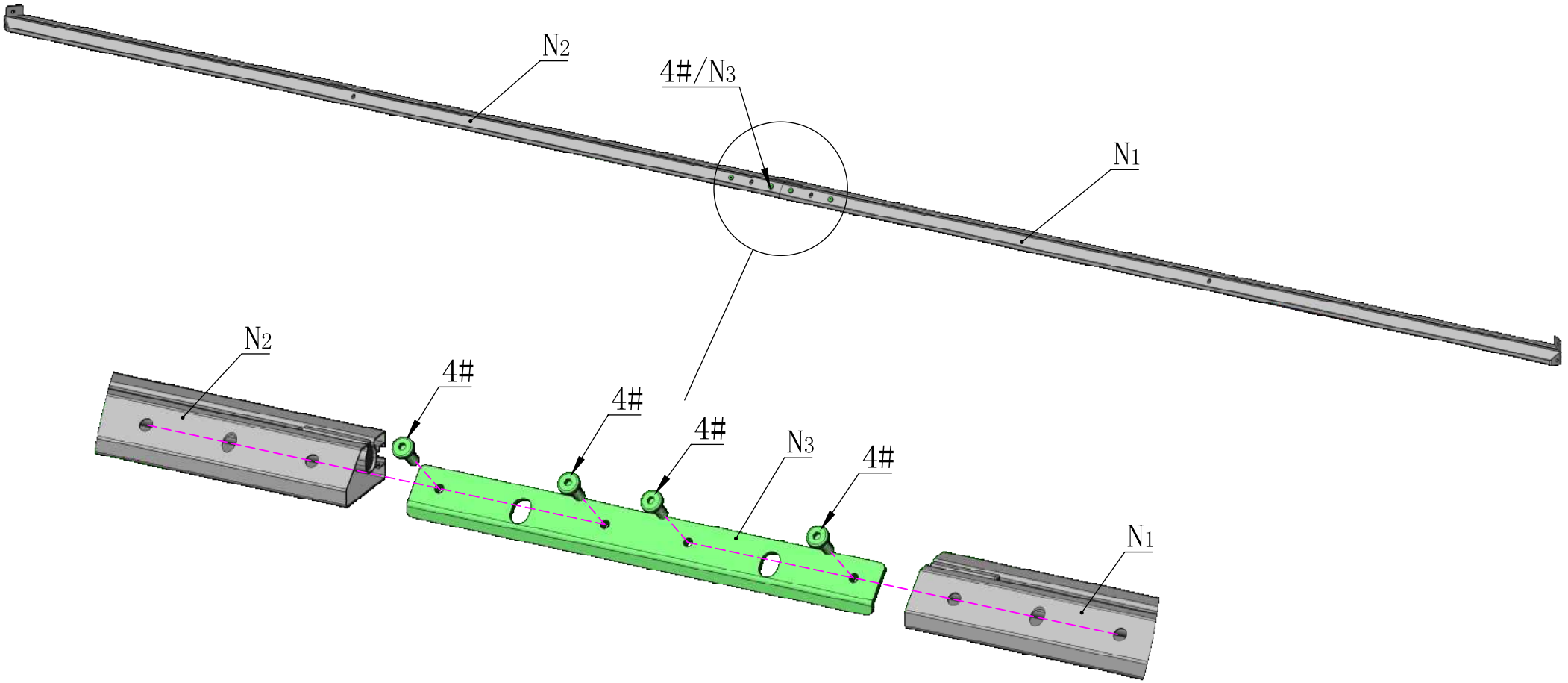

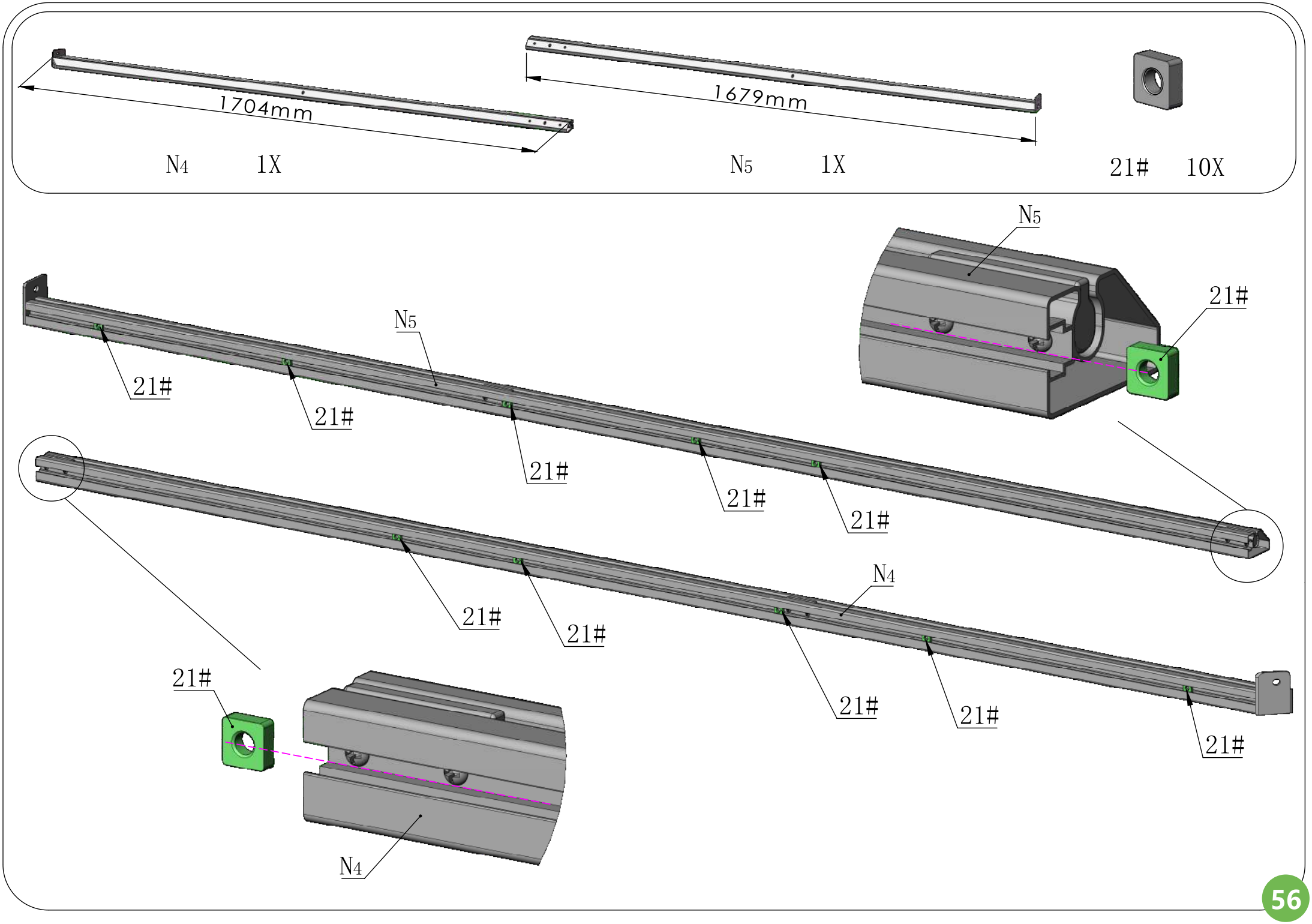
1704mm
1679mm
N4 1X
N5 1X
21# 10X
N5
21#
21#
21#
21#
21#
21#
21#
21#
21#
21#
21#
21#
21#
N4
N4

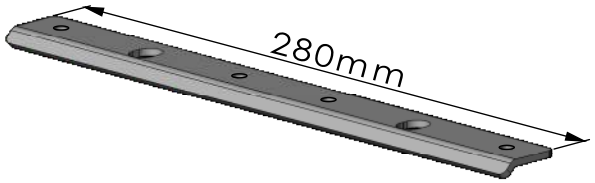

N3 1X

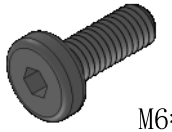

M6*16

4# 4X

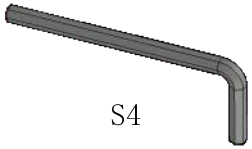

S4

23# 1X

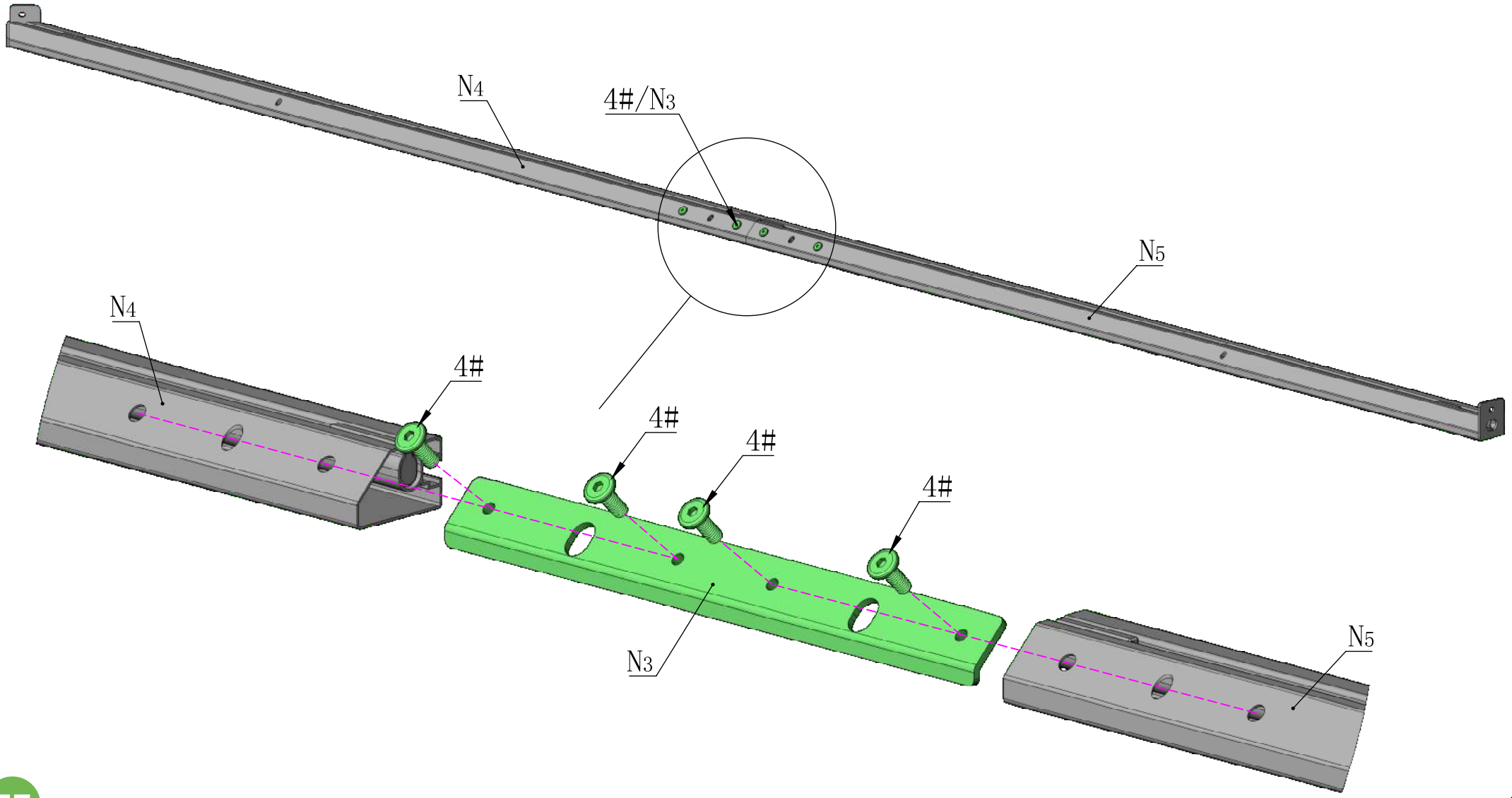

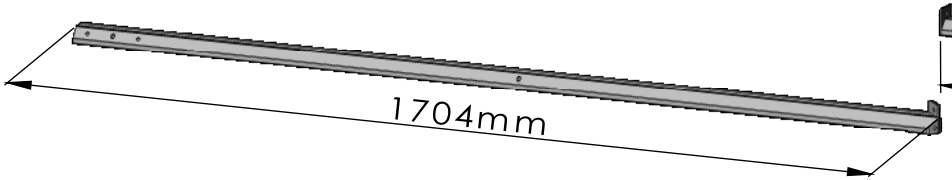

N6 1X

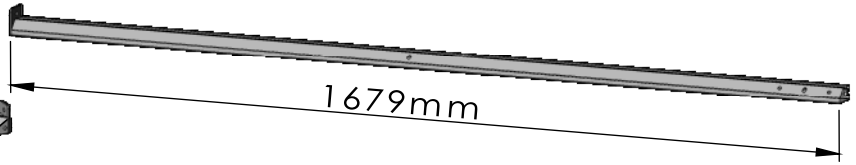

N7 1X



21# 10X

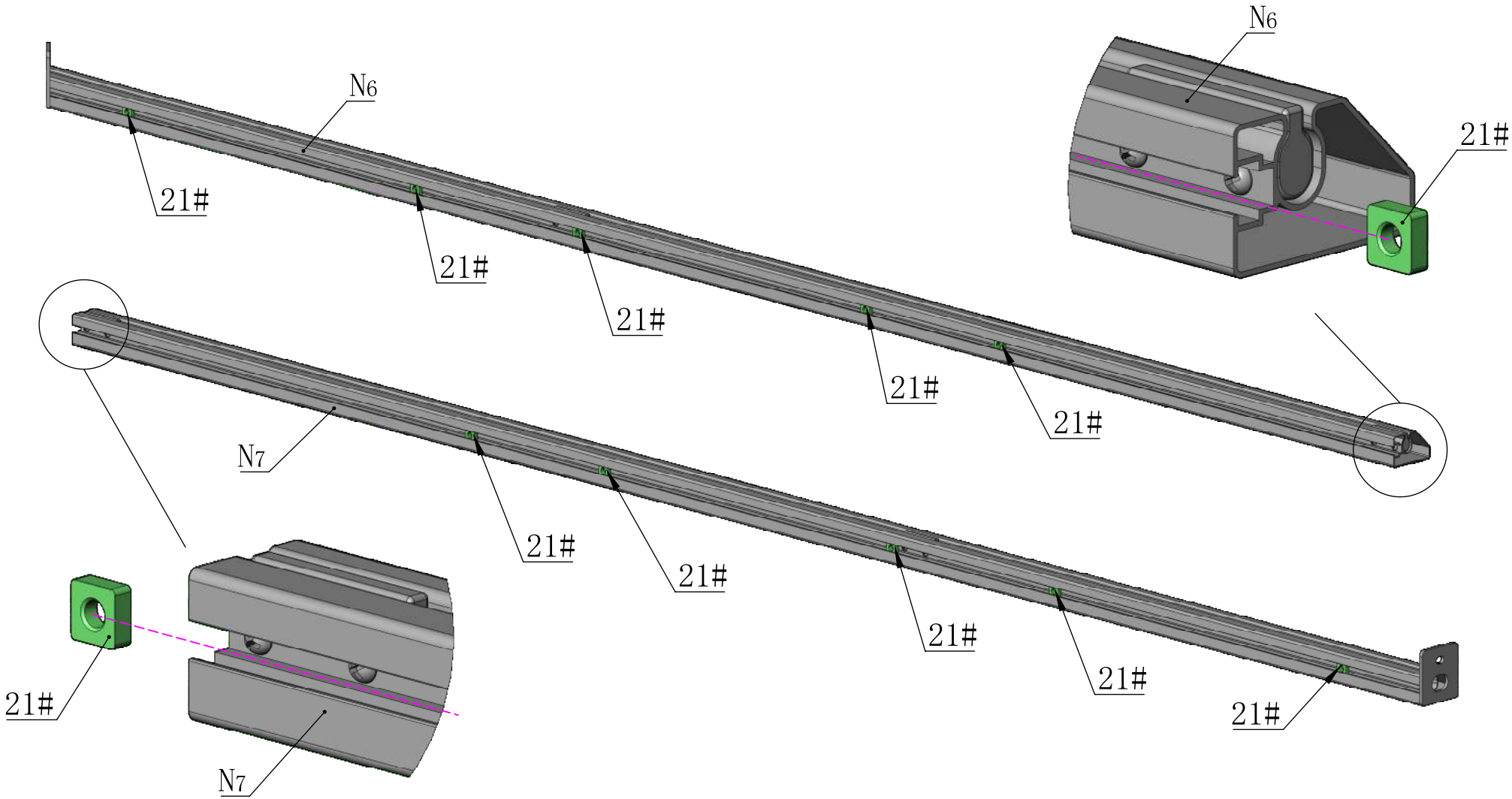

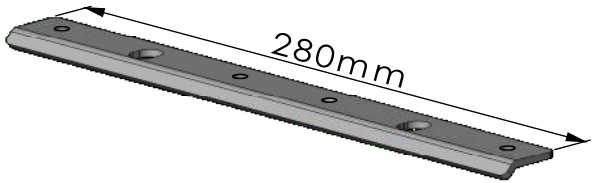

N3 1X

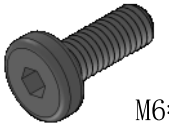

4# 4X

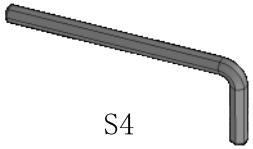

23# 1X

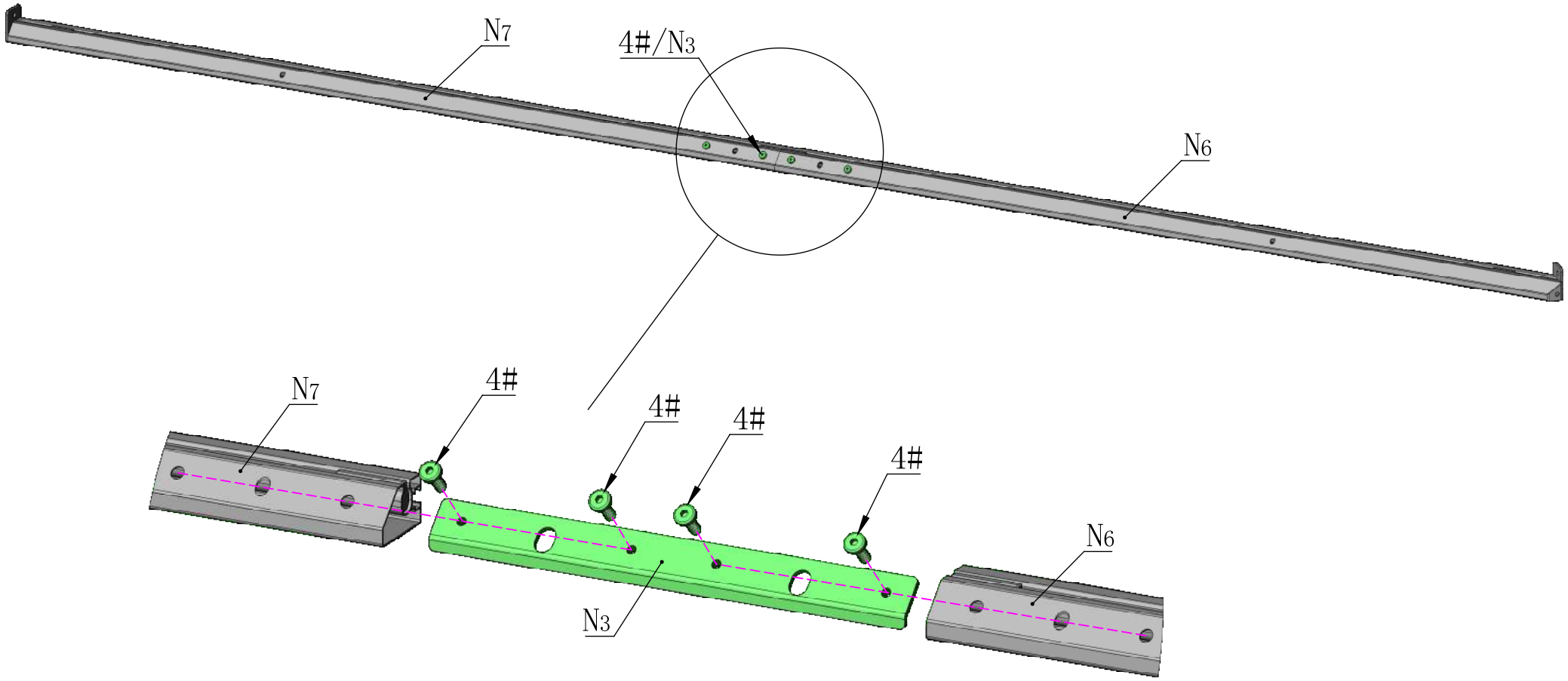

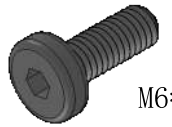

M6*16

4# 2X

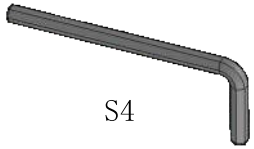

S4

23# 1X

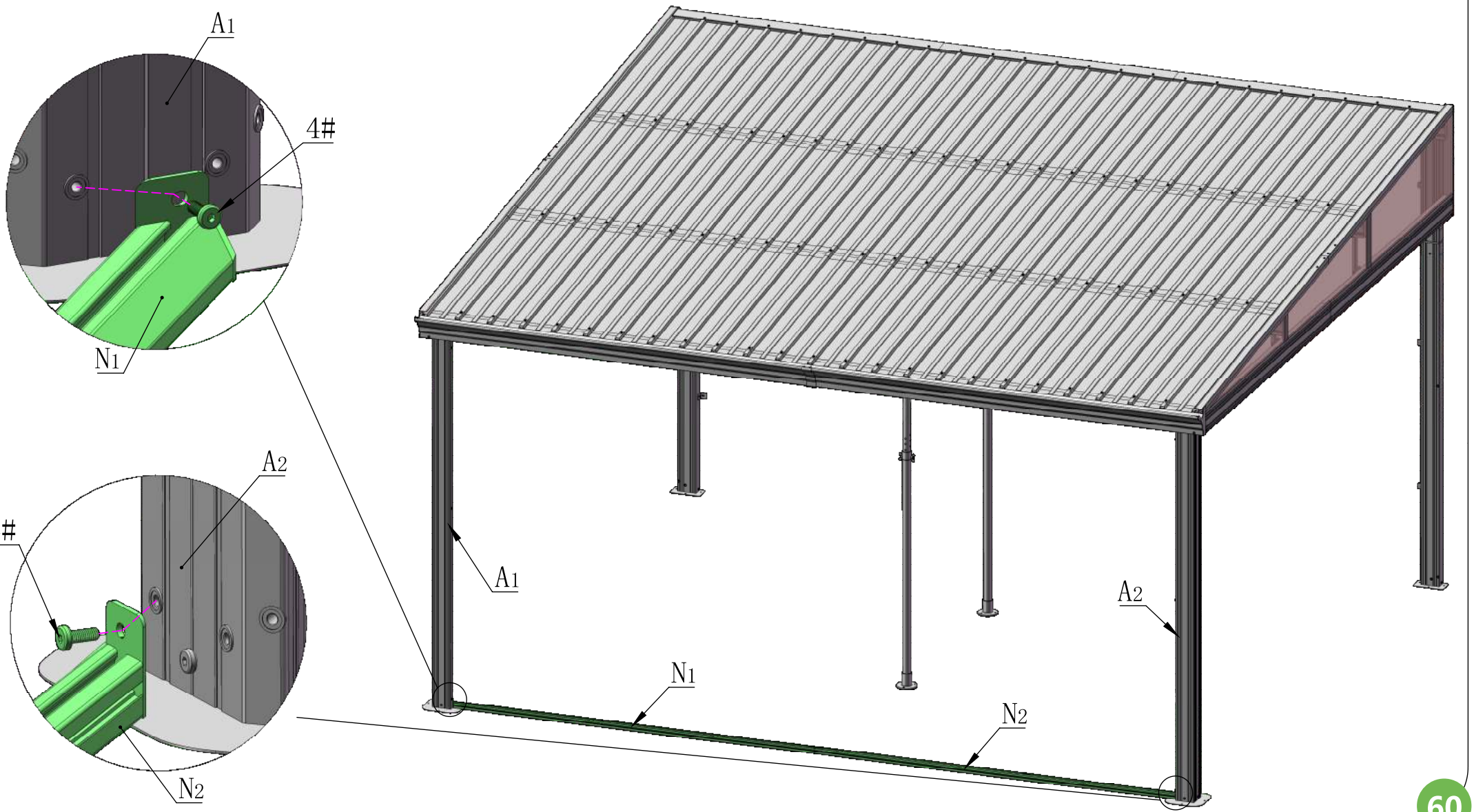

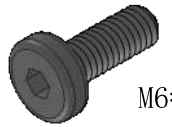
M6*16

4# 4X

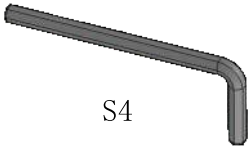
S4

23# 1X

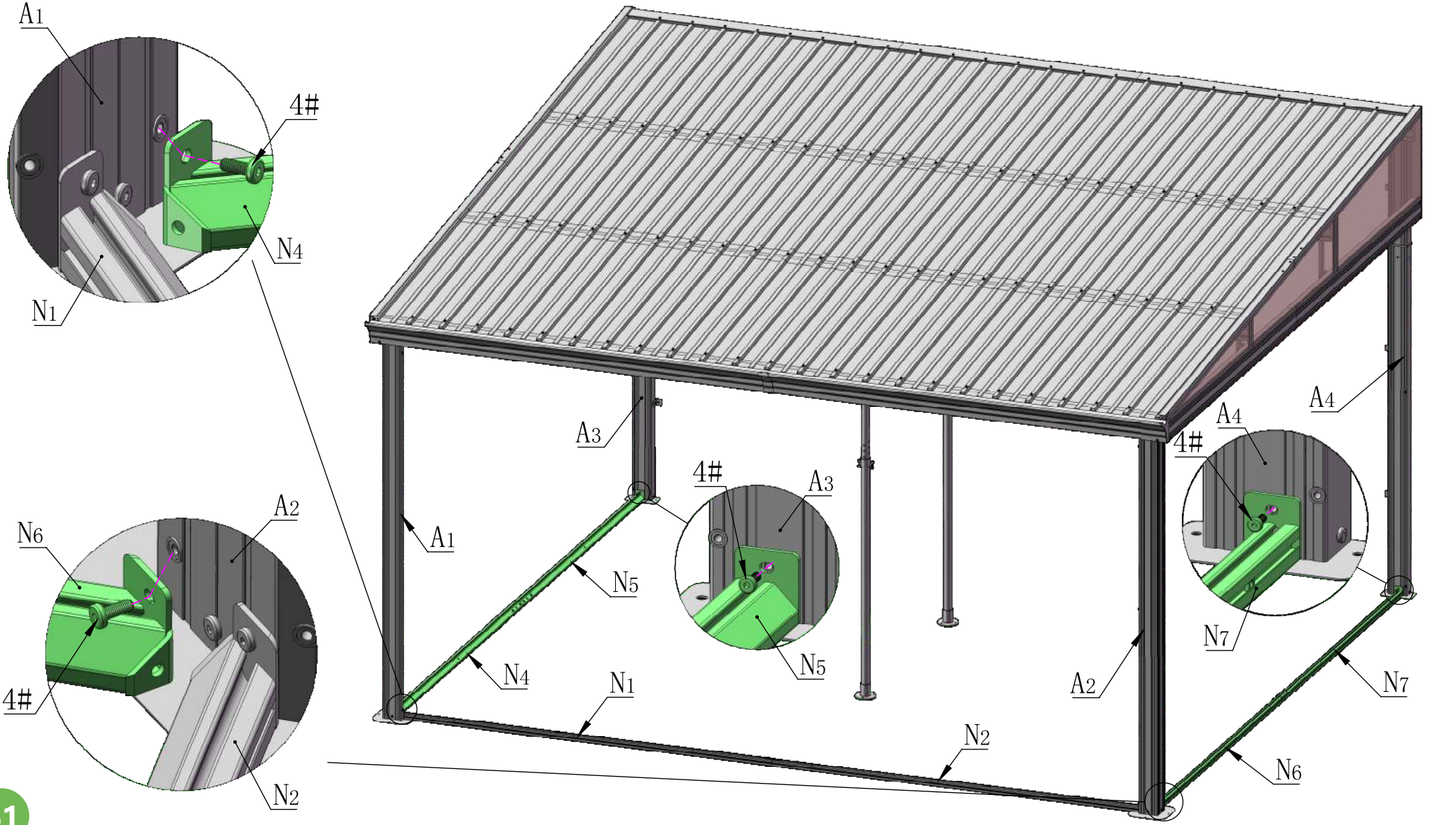
A1
4#
N4
N1
A2
N6
4#
N2
A3
4#
A3
A1
N5
N4
N1
N5
N2
A4
A4
4#
N7
A2
N7
N6

Please remove the window screens from #O1/O2/O3/O4
BEFORE assembling the wall panel.

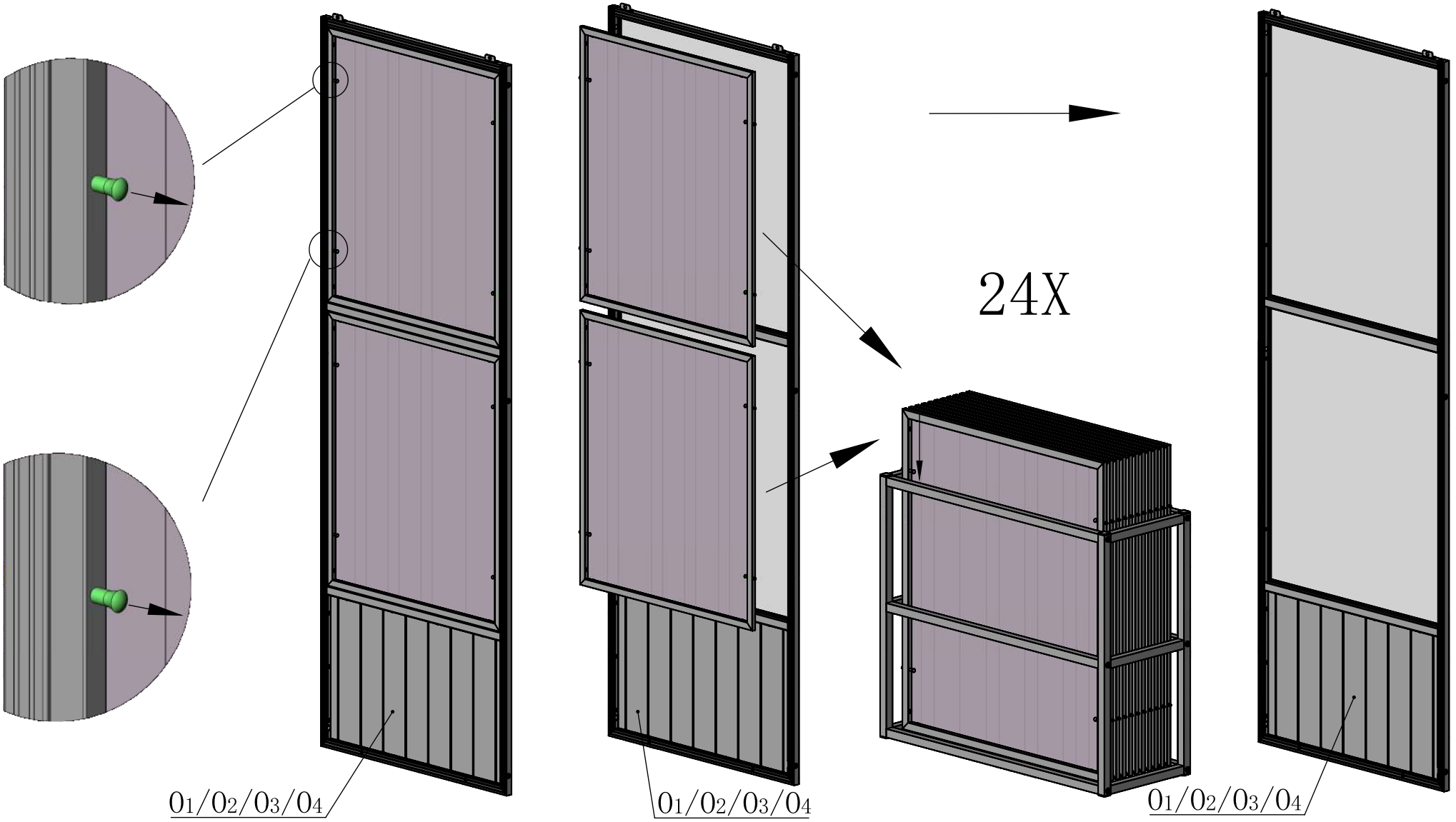

Wall Panel Assembly

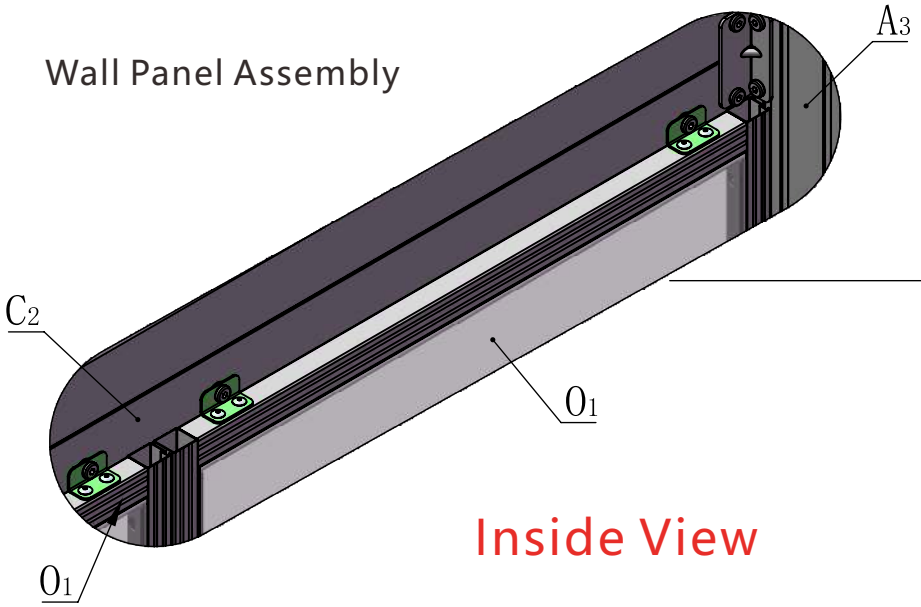

Inside View

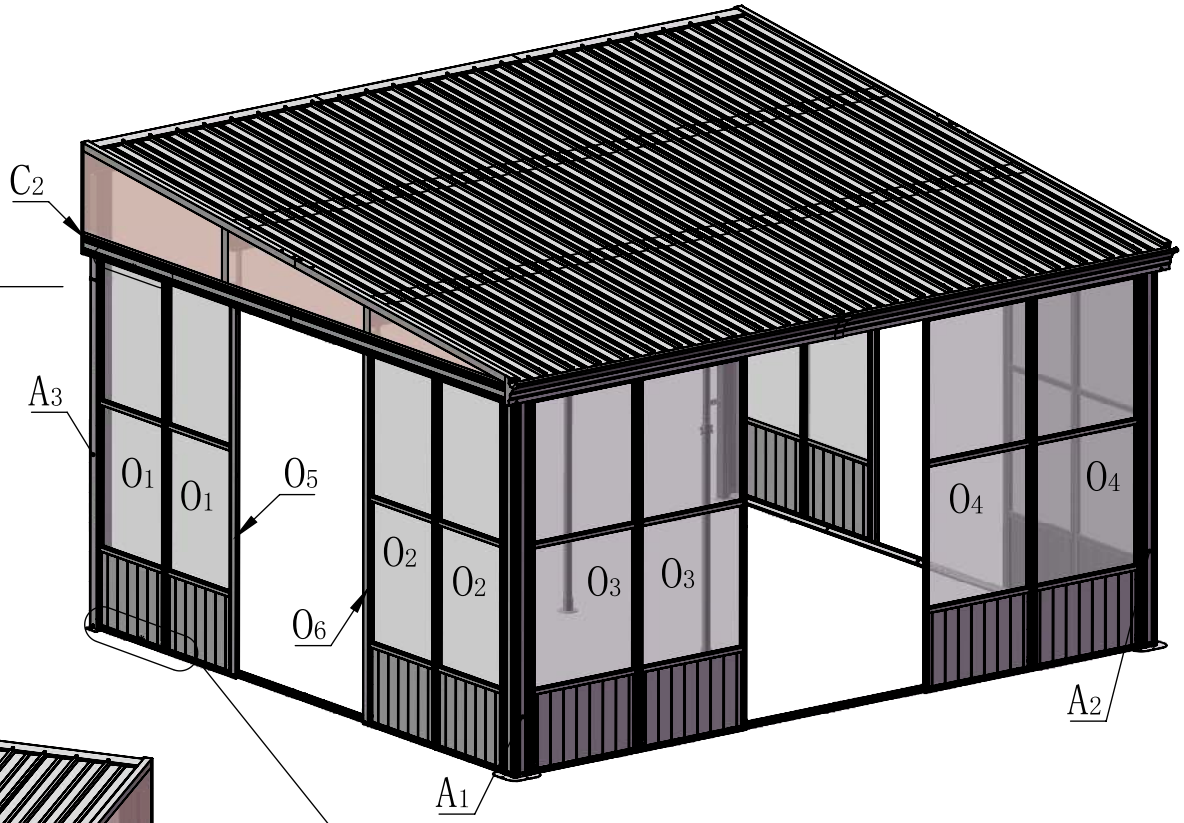

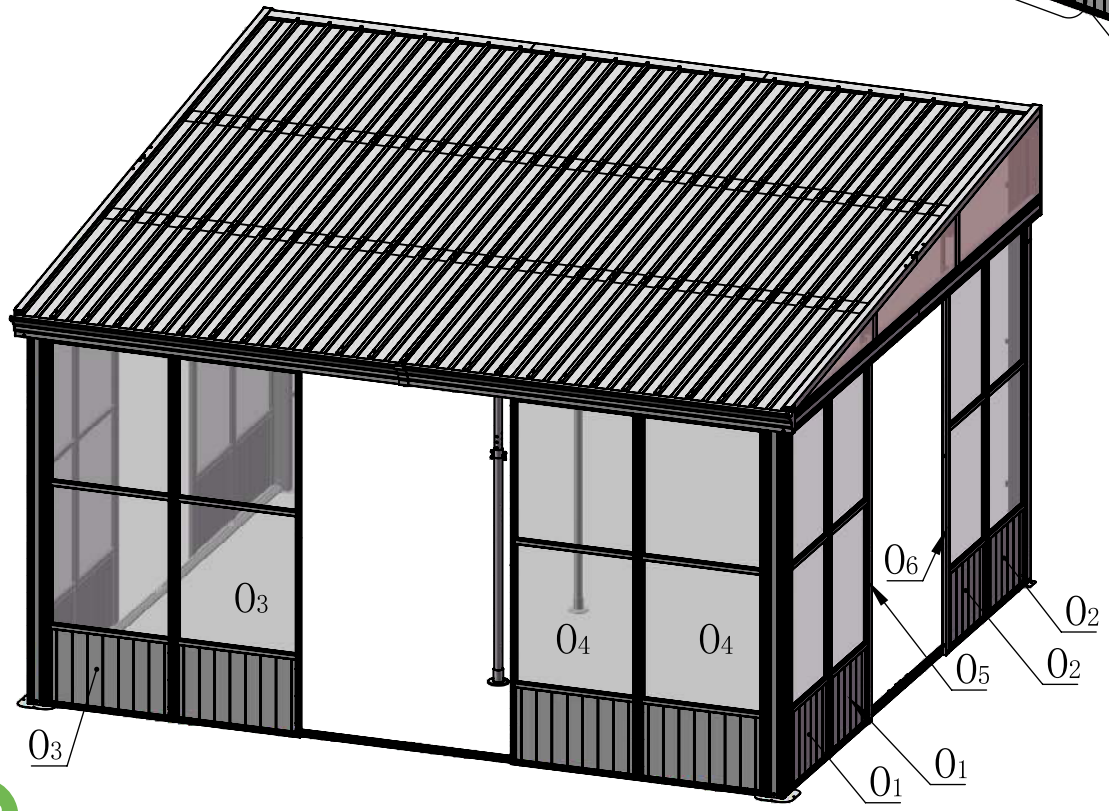

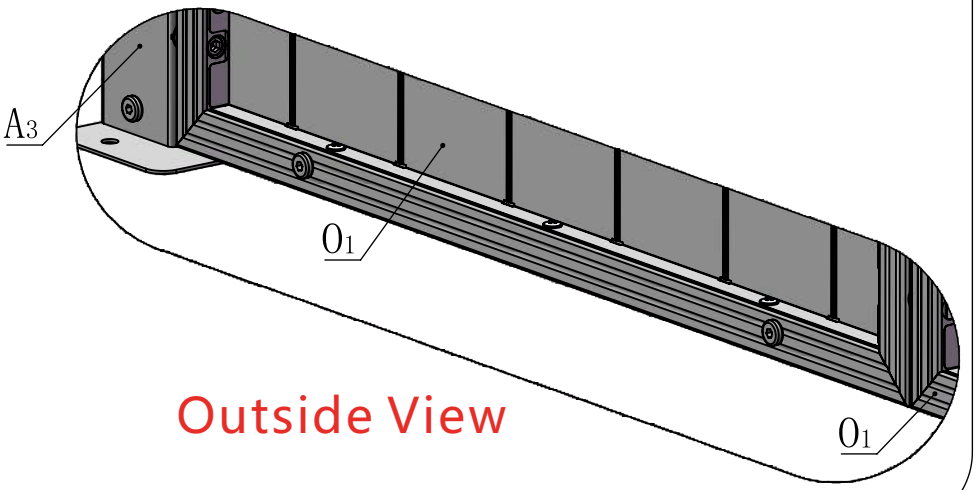

Outside View

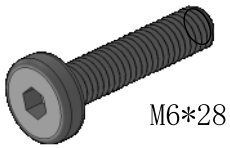

5# 2X

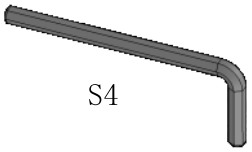

23# 1X

Attention: Assemble according to the sequence of steps. Align the holes, tighten each screen after all screws are positioned.
Tighten screw 5# to metal square nuts 21# first.

Section View

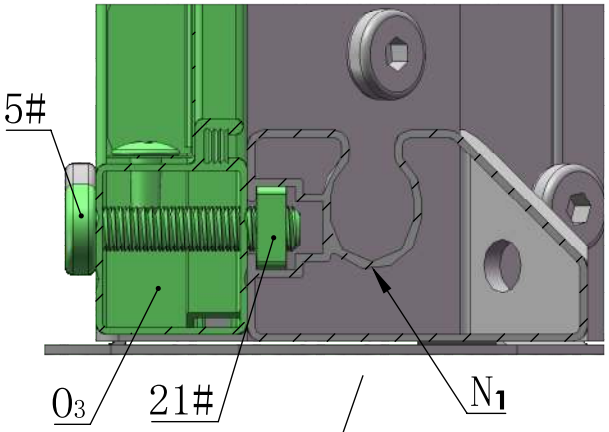

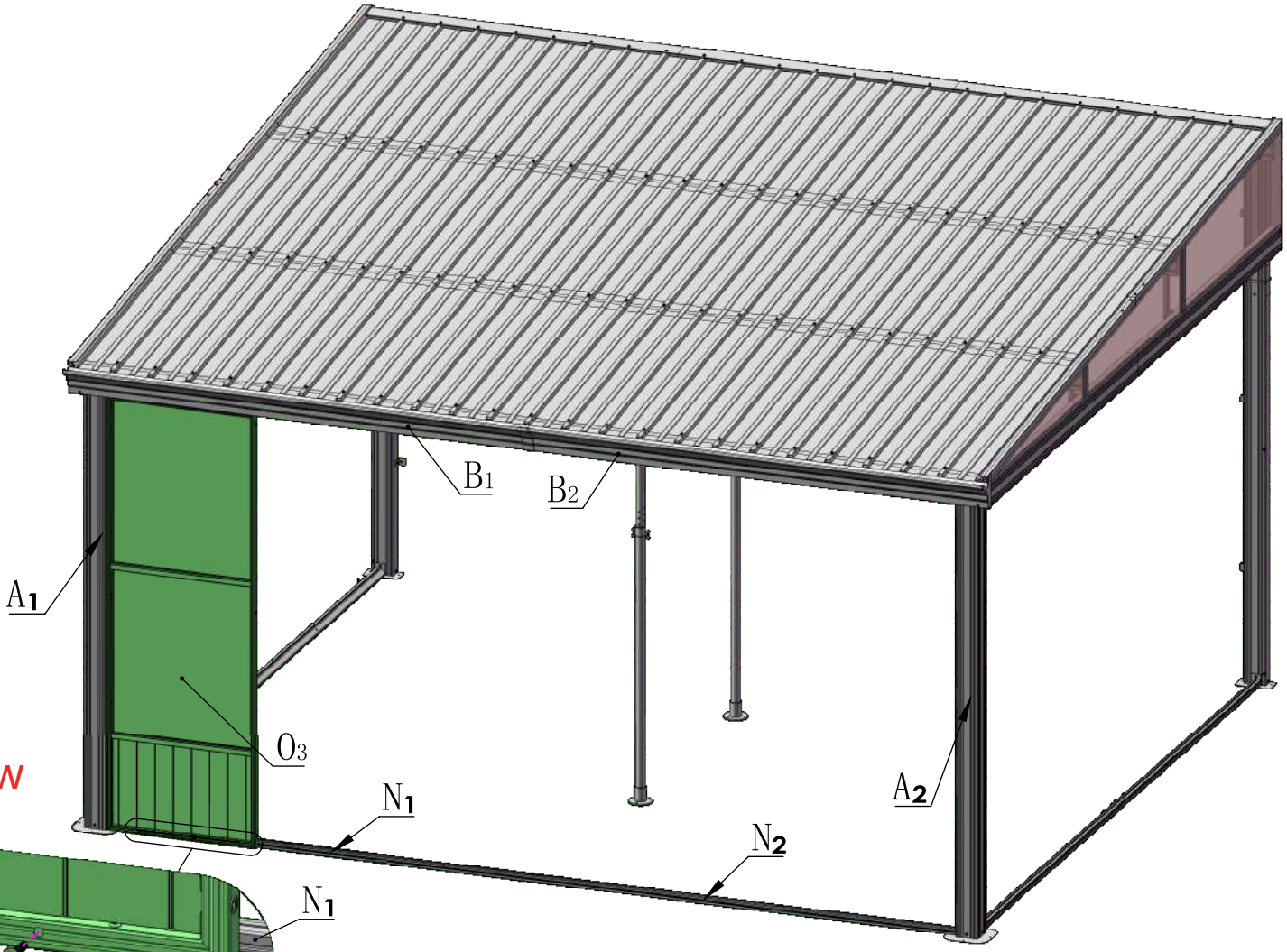

Outside View

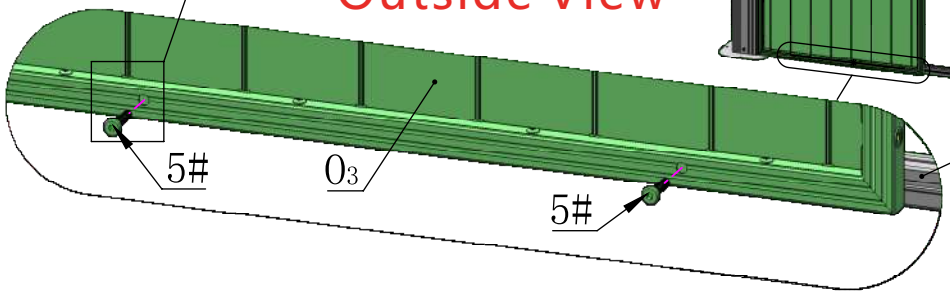

STEP 1

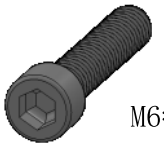

16# 3X

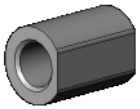

17# 3X

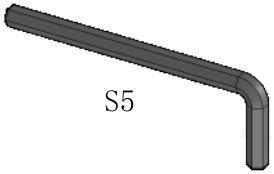

24# 1X

Attention: Assemble according to the sequence of steps. Align the holes, tighten each screen after all screws are positioned.
Tighten screw 5# to metal square nuts 21# first.

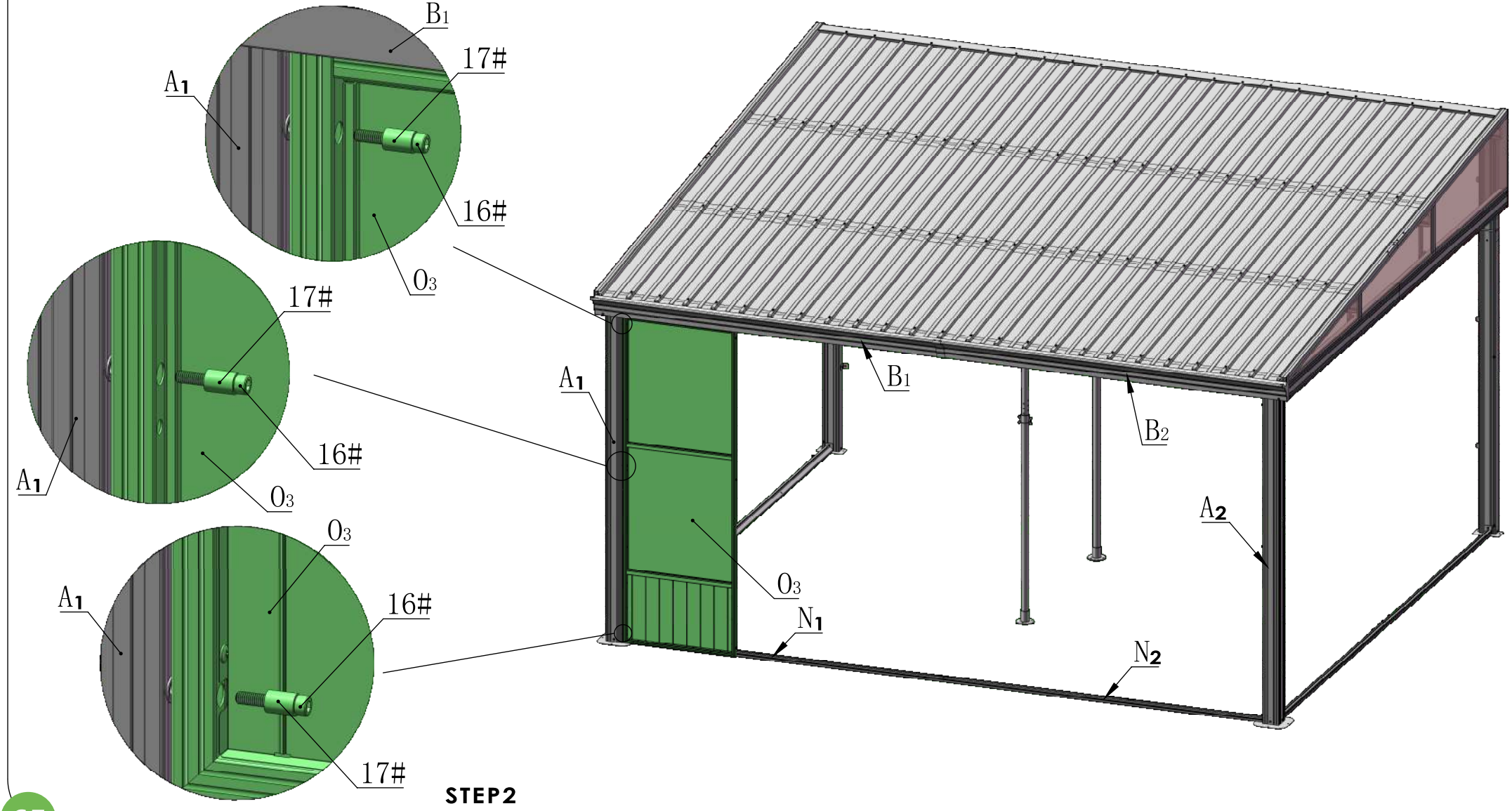

STEP2

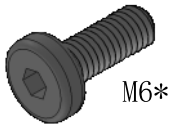

4# 2X

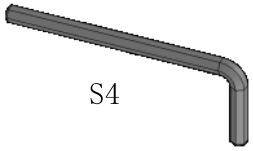

23# 1X

The removable windows should be installed outwards while the screen is inwards.

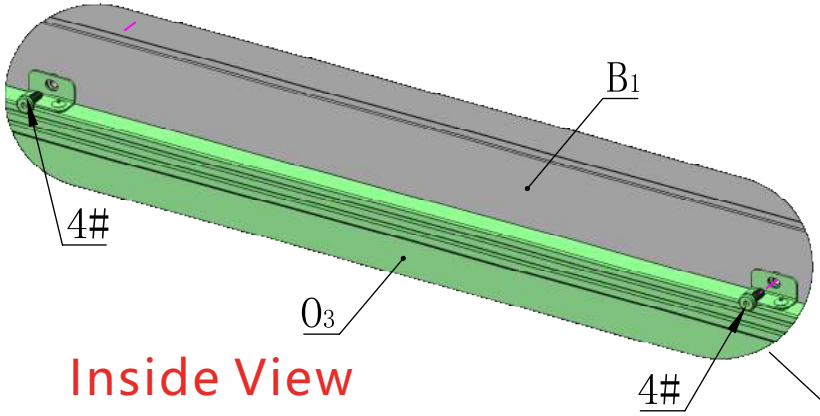

Inside View

STEP3

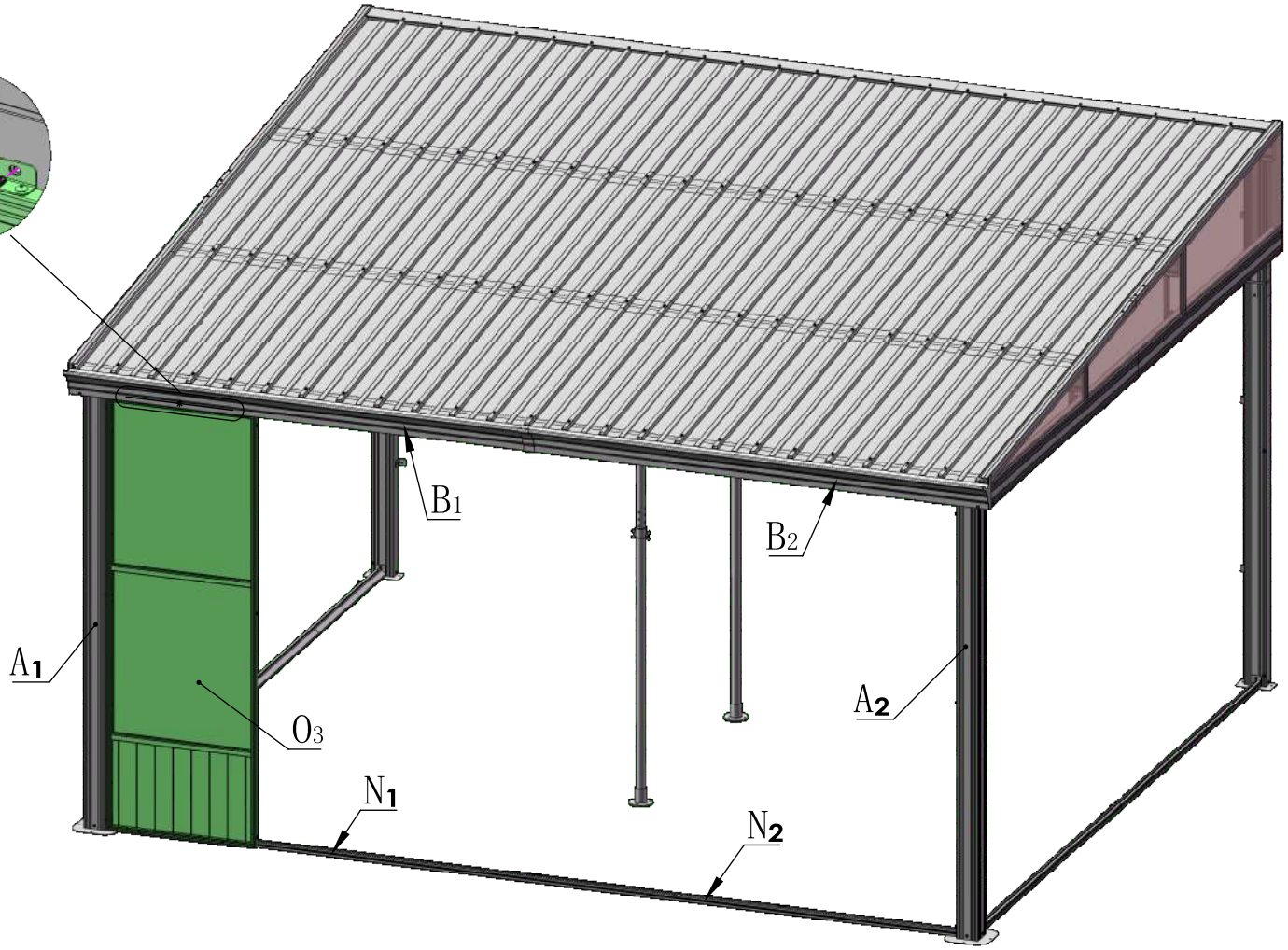



4# 2X



5# 2X



16# 3X



17# 3X

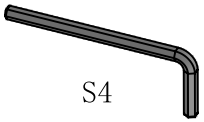

23# 1

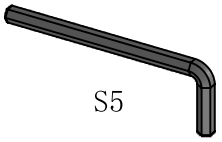

24# 1

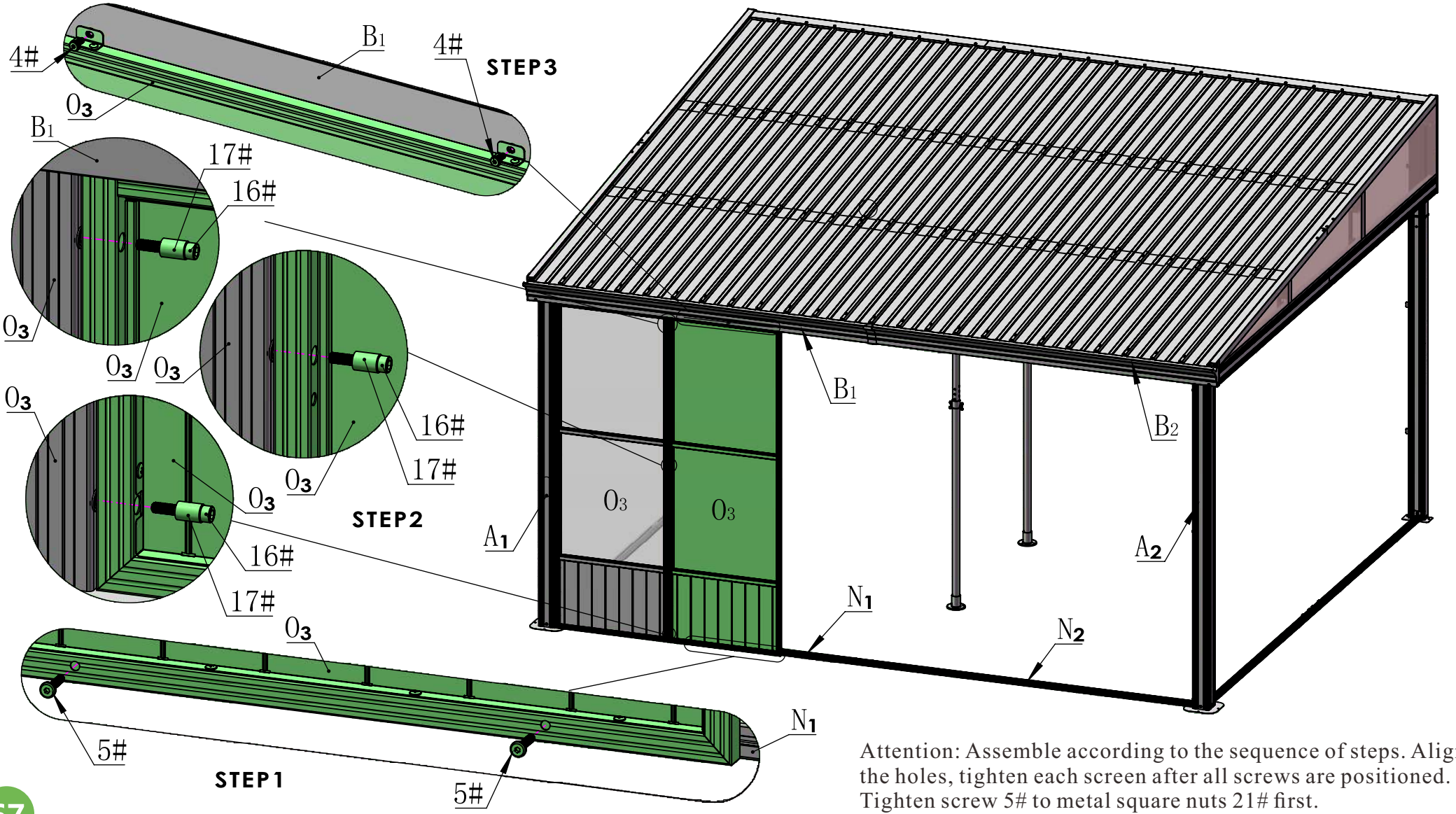

Attention: Assemble according to the sequence of steps. Align the holes, tighten each screen after all screws are positioned. Tighten screw 5# to metal square nuts 21# first.



4# 4X



5# 4X



16# 6X



17# 6X

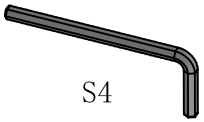

23# 1

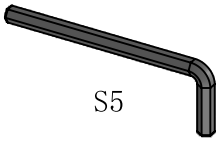

24# 1

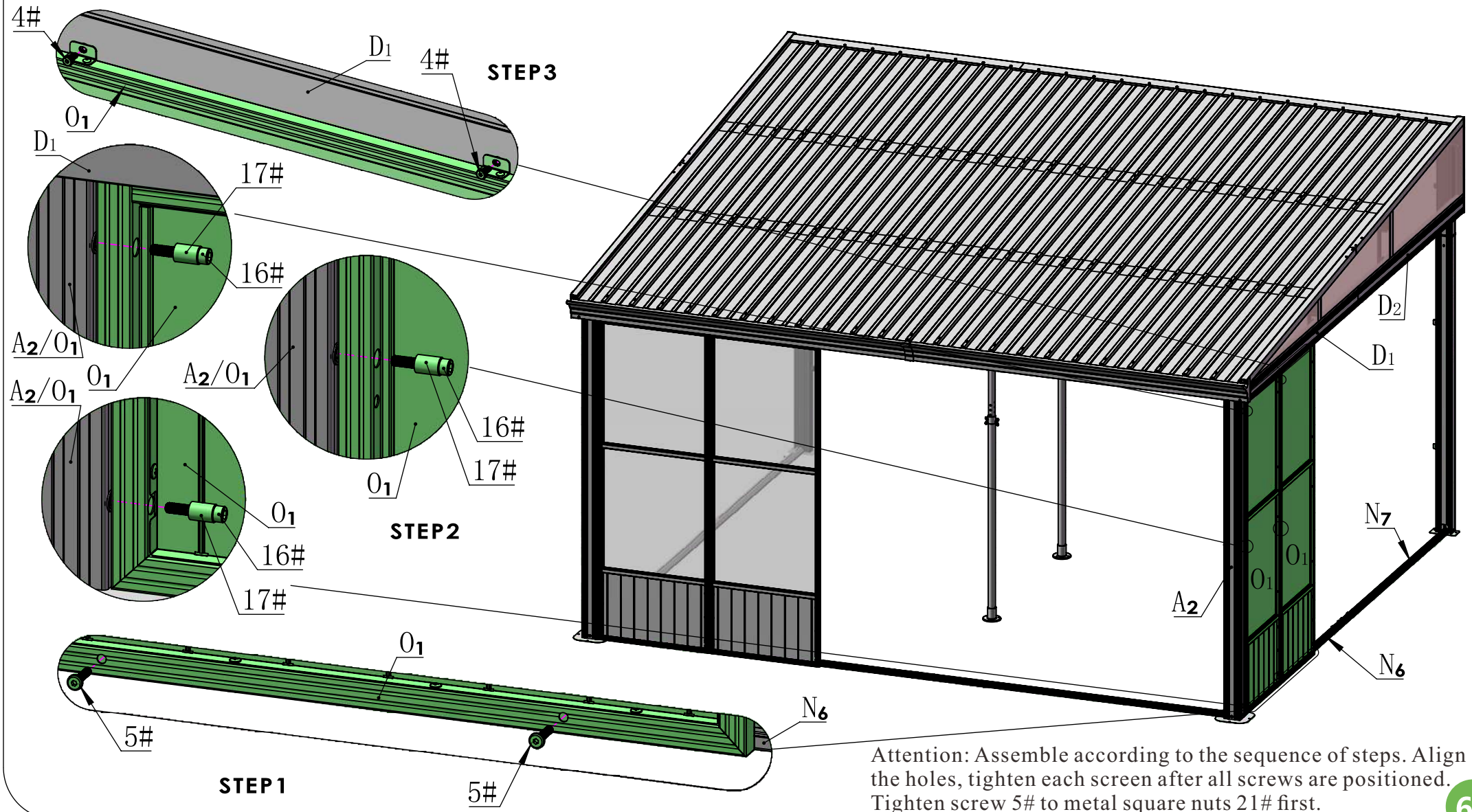

Attention: Assemble according to the sequence of steps. Align the holes, tighten each screen after all screws are positioned. Tighten screw 5# to metal square nuts 21# first.



4# 4X



5# 4X



16# 6X



17# 6X

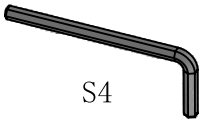

23# 1

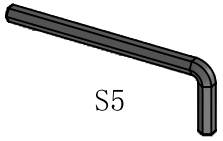

24# 1

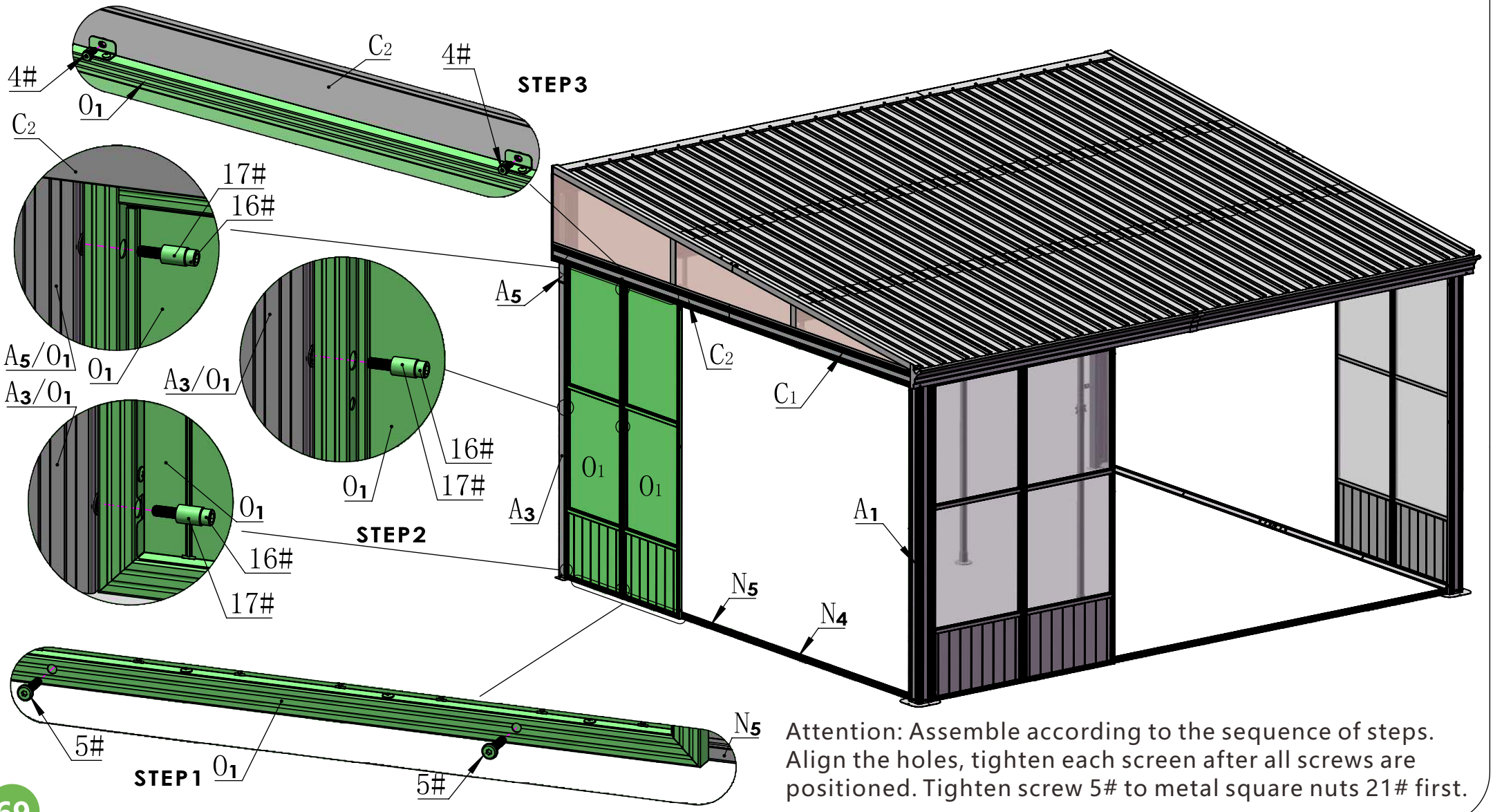

Attention: Assemble according to the sequence of steps. Align the holes, tighten each screen after all screws are positioned. Tighten screw 5# to metal square nuts 21# first.



4# 4X



5# 4X



16# 6X



17# 6X

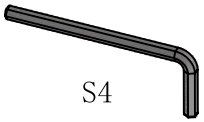

23# 1

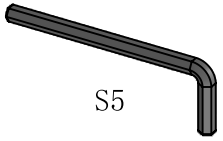

24# 1

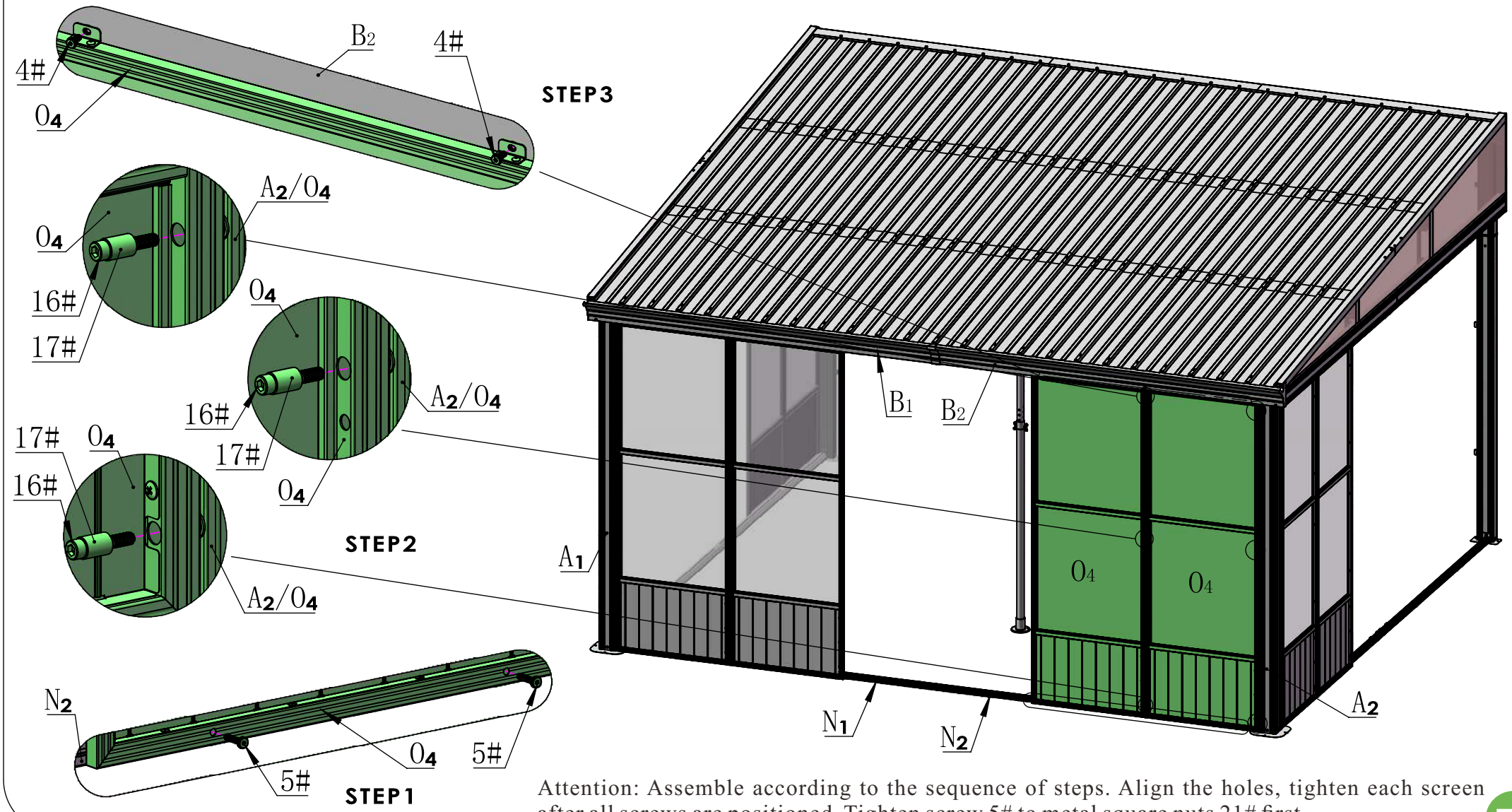

Attention: Assemble according to the sequence of steps. Align the holes, tighten each screen after all screws are positioned. Tighten screw 5# to metal square nuts 21# first.



4# 4X



5# 4X



16# 6X



17# 6X

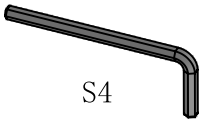

23# 1

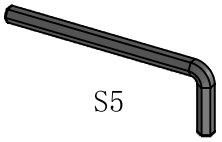

24# 1

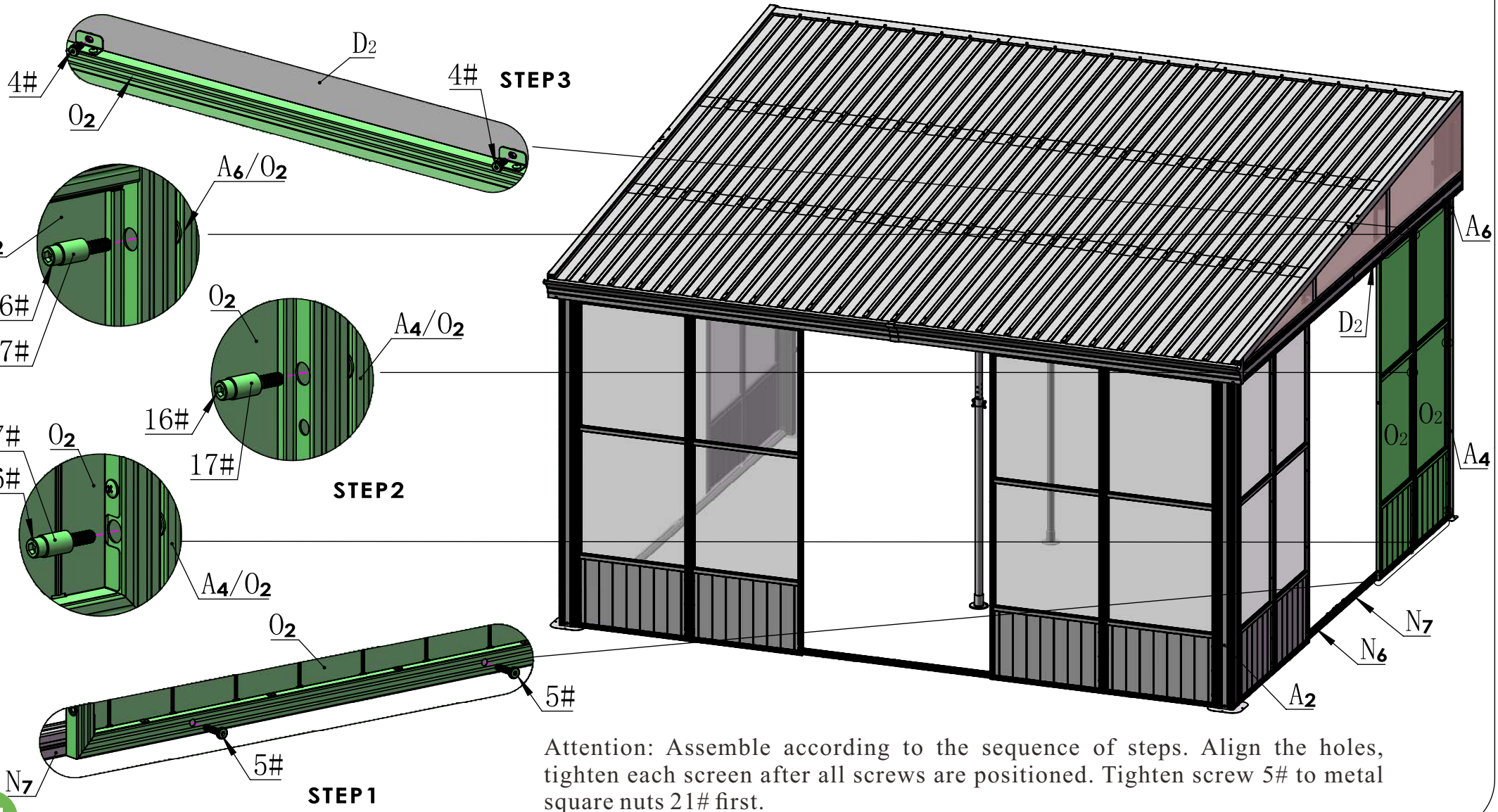

Attention: Assemble according to the sequence of steps. Align the holes, tighten each screen after all screws are positioned. Tighten screw 5# to metal square nuts 21# first.



4# 4X



5# 4X



16# 6X



17# 6X

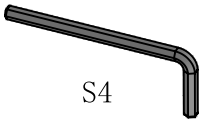

23# 1

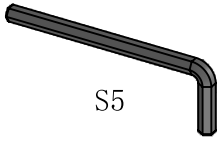

24# 1

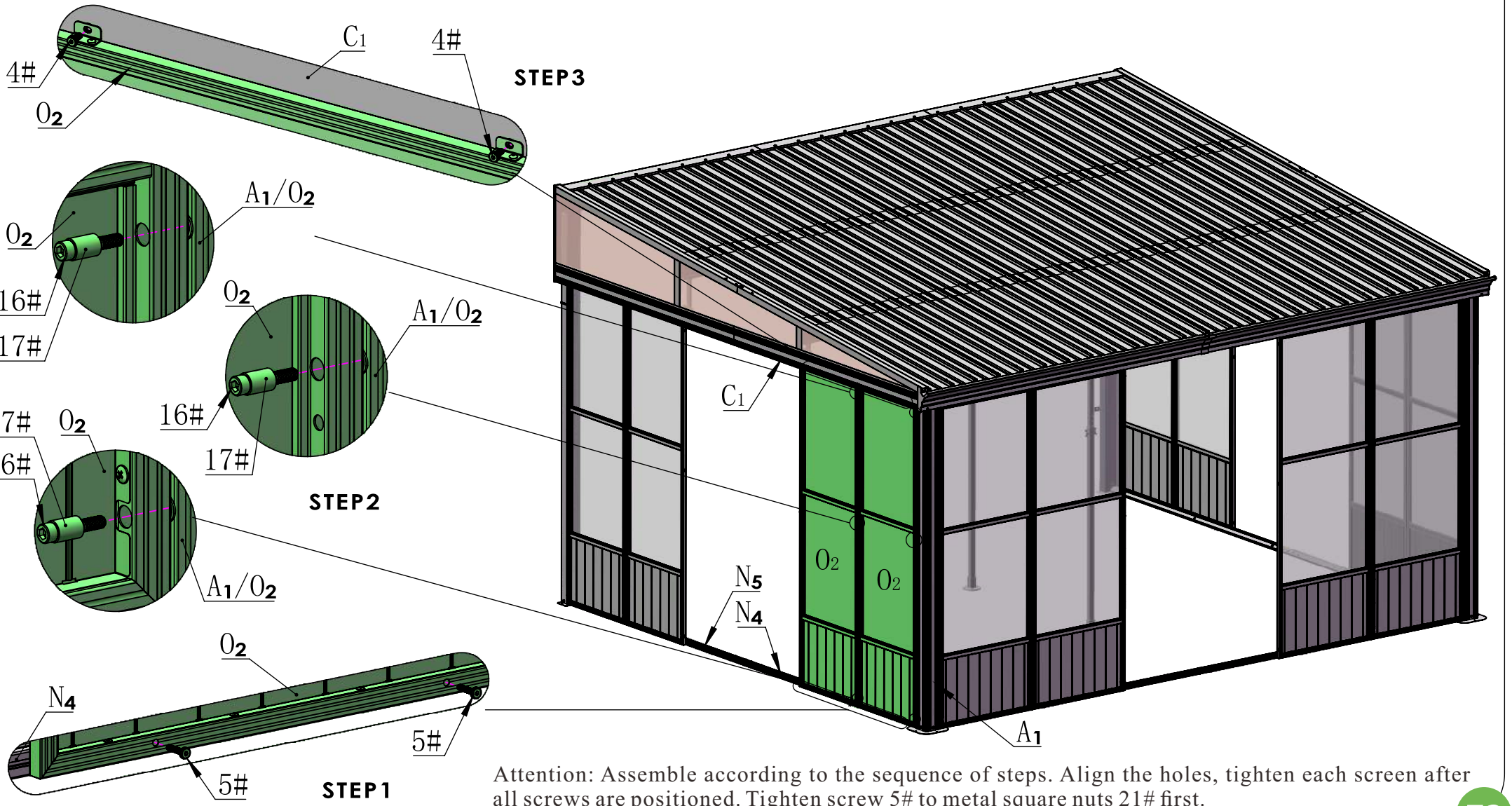

Attention: Assemble according to the sequence of steps. Align the holes, tighten each screen after all screws are positioned. Tighten screw 5# to metal square nuts 21# first.

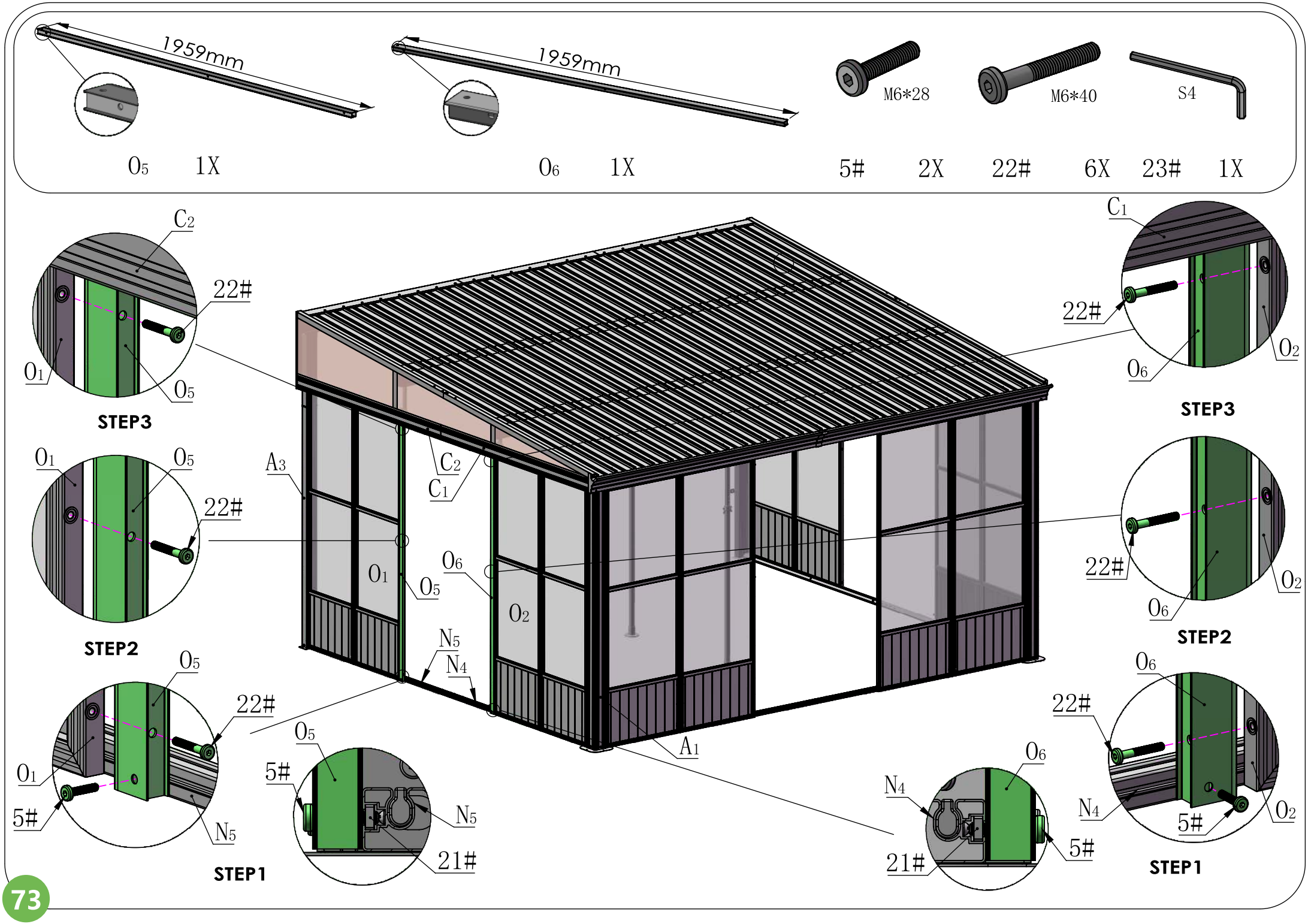
1959mm
1959mm
M6*28
M6*40
S4
O5 1X
O6 1X
5# 2X
22# 6X
23# 1X
C2
22#
O1
O5
STEP3
C1
22#
O6
O2
STEP3
O1
O5
22#
STEP2
22#
O6
O2
STEP2
A3
C2
C1
O1
O5
O6
O2
N5
N4
A1
O5
22#
O1
5#
N5
STEP1
O5
5#
N5
21#
O6
N4
21#
5#
O6
22#
N4
5#
O2
STEP1

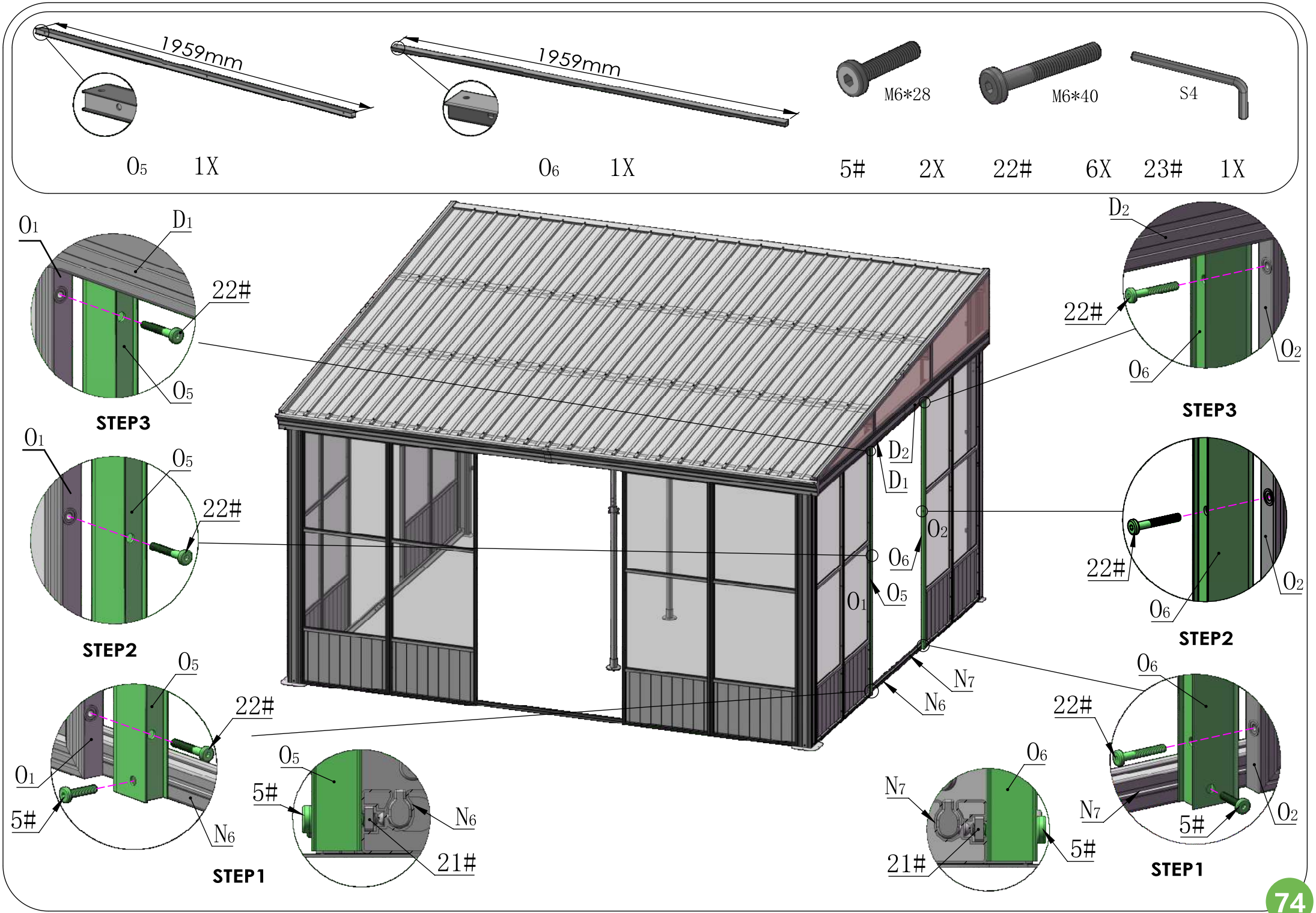
1959mm
1959mm
M6*28
M6*40
S4
O5 1X
O6 1X
5# 2X
22# 6X
23# 1X
O1
D1
22#
O5
STEP3
O1
O5
22#
STEP2
O5
22#
O1
5#
N6
STEP1
O5
5#
N6
21#
D2
22#
O6
O2
STEP3
D2
D1
O2
O6
O5
O1
N7
N6
O2
22#
O6
STEP2
O6
22#
N7
5#
O2
STEP1
O6
N7
21#
5#



27# 6

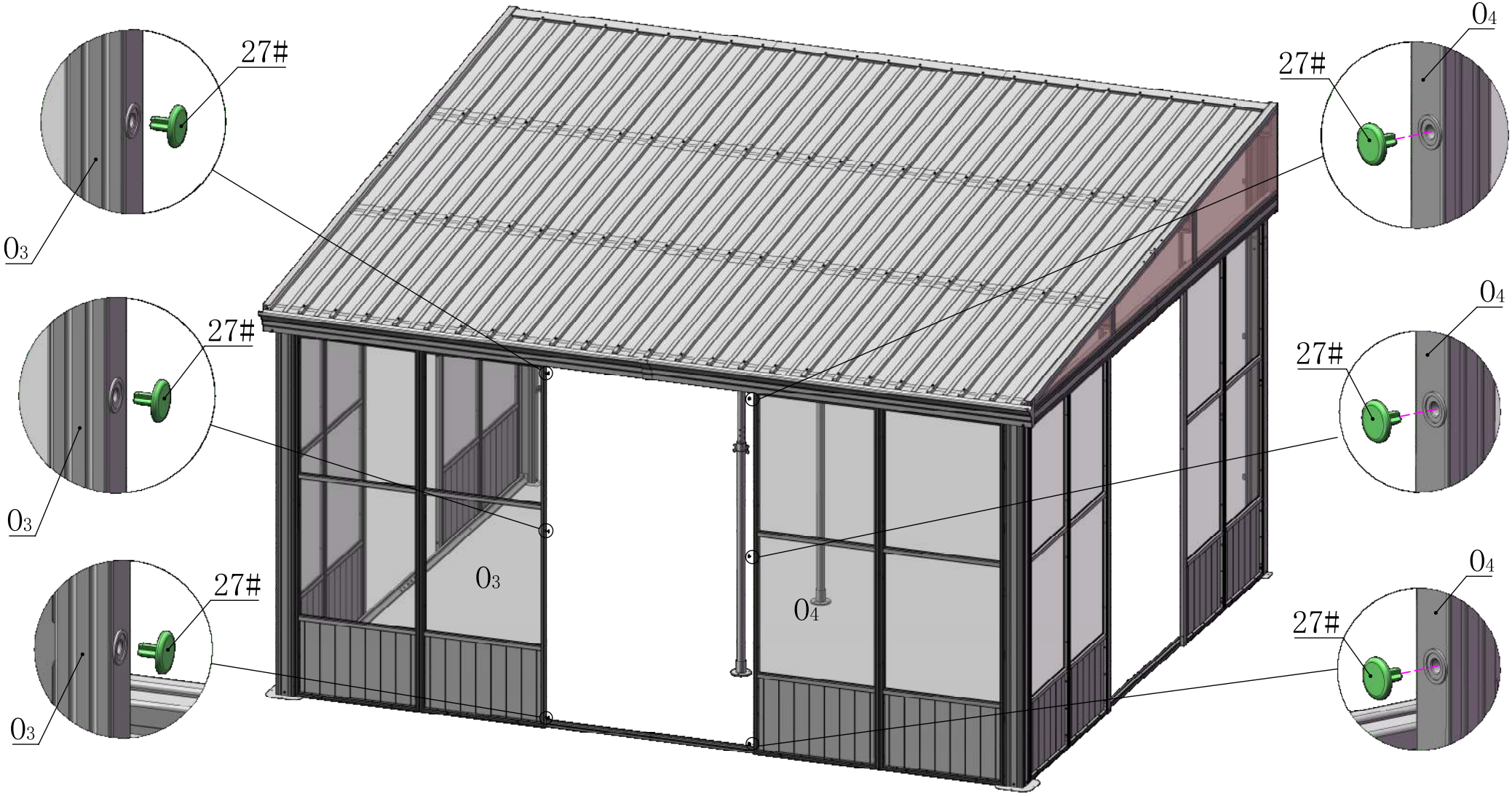



K4 4X



18# 8X



19# 8X

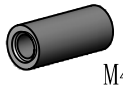

20# 4X

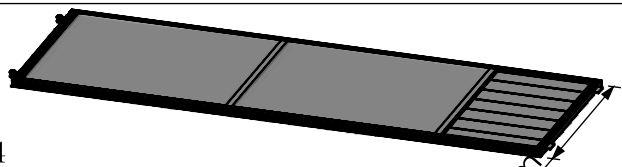

P1 1X

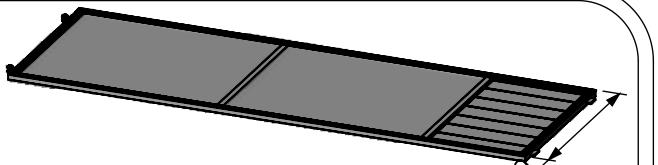

P2 1X

Sliding Door Assembly

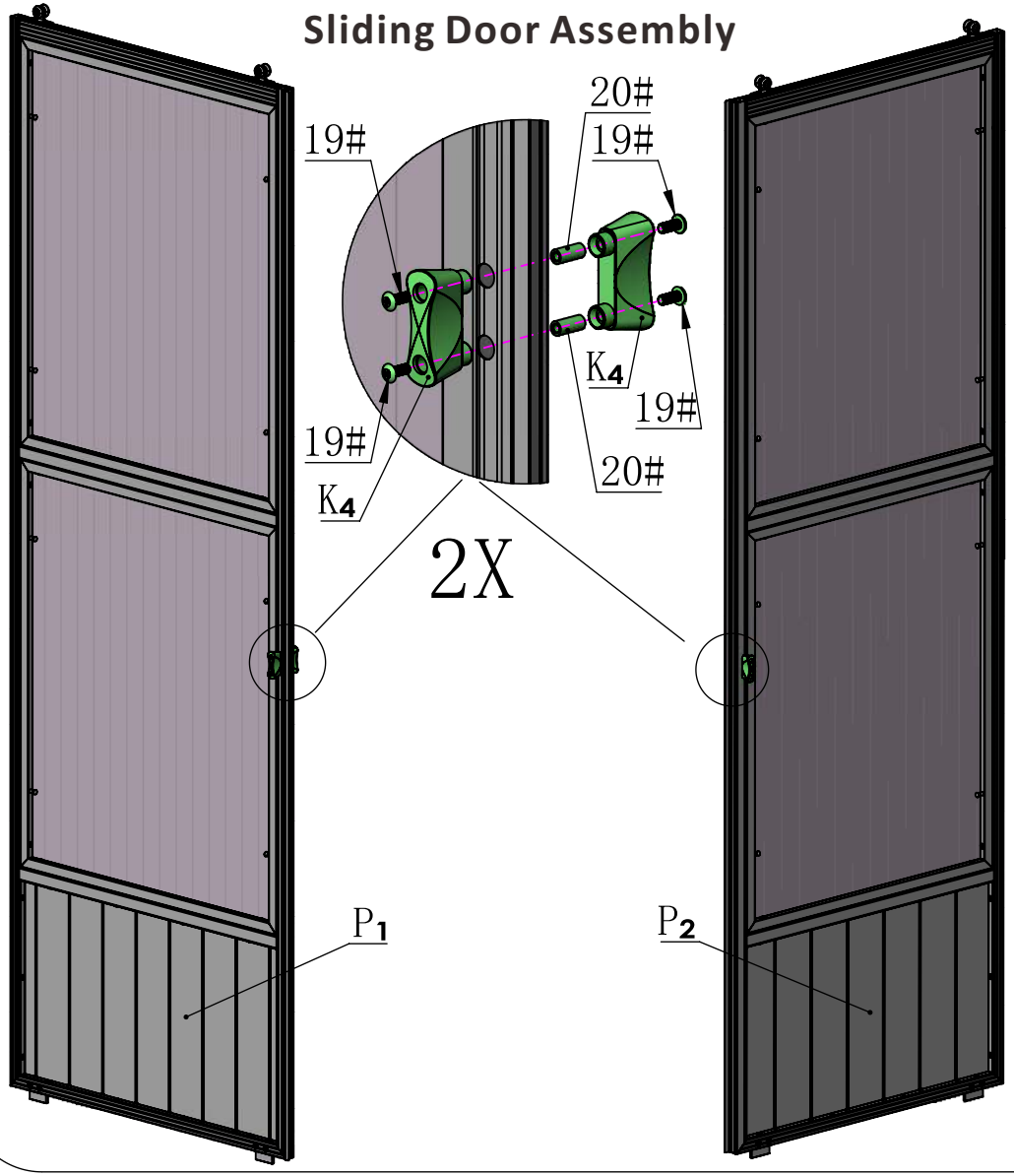

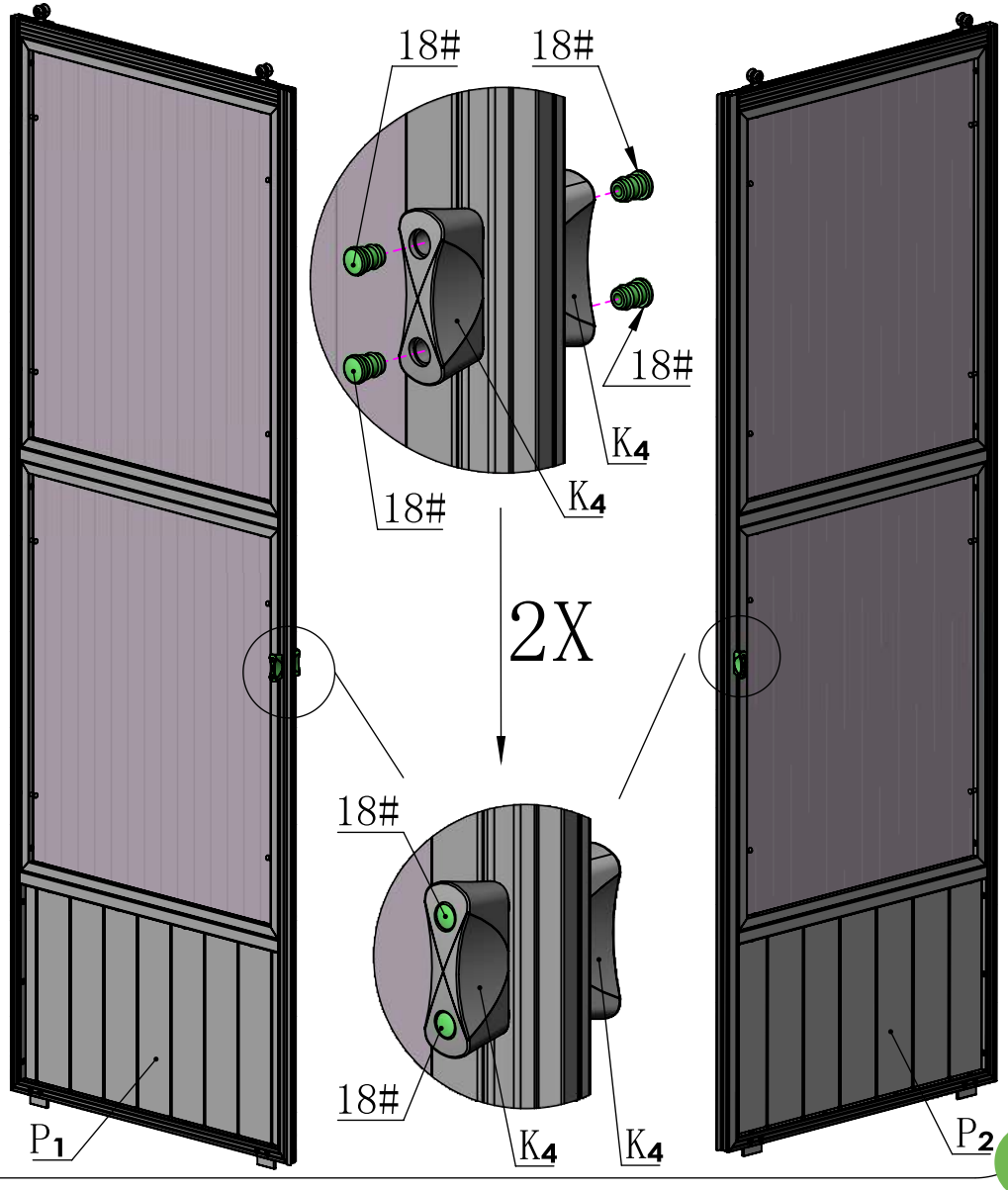

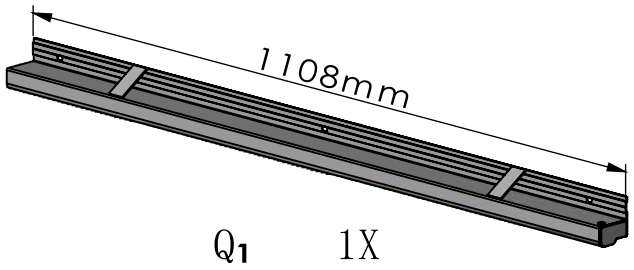

Q_1 1X

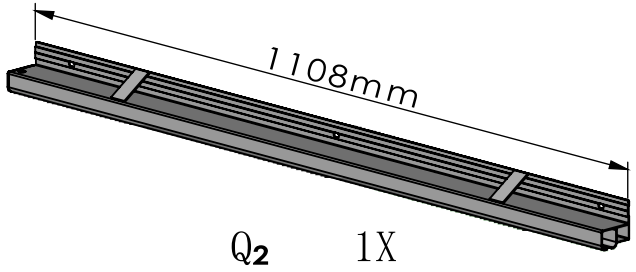

Q_2 1X

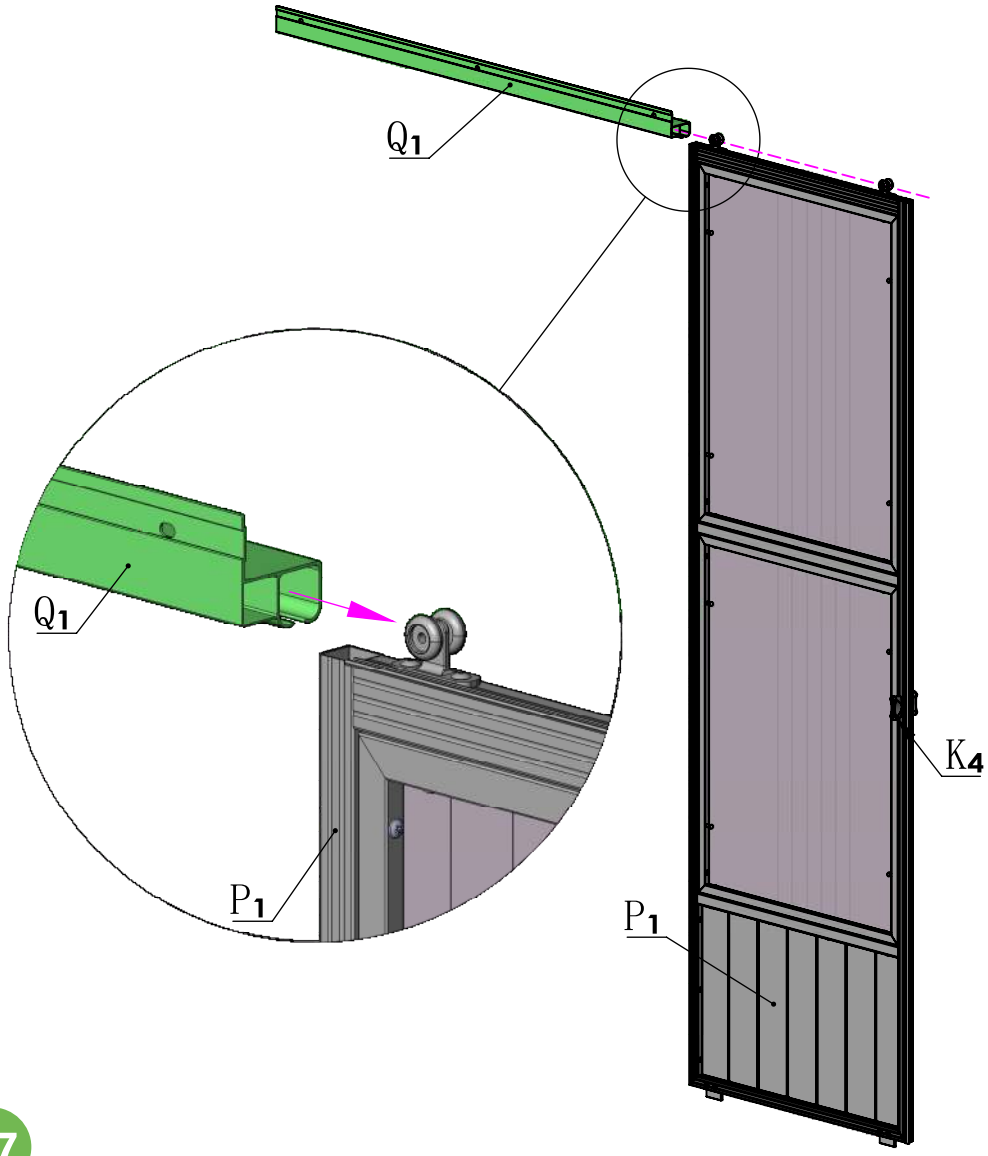

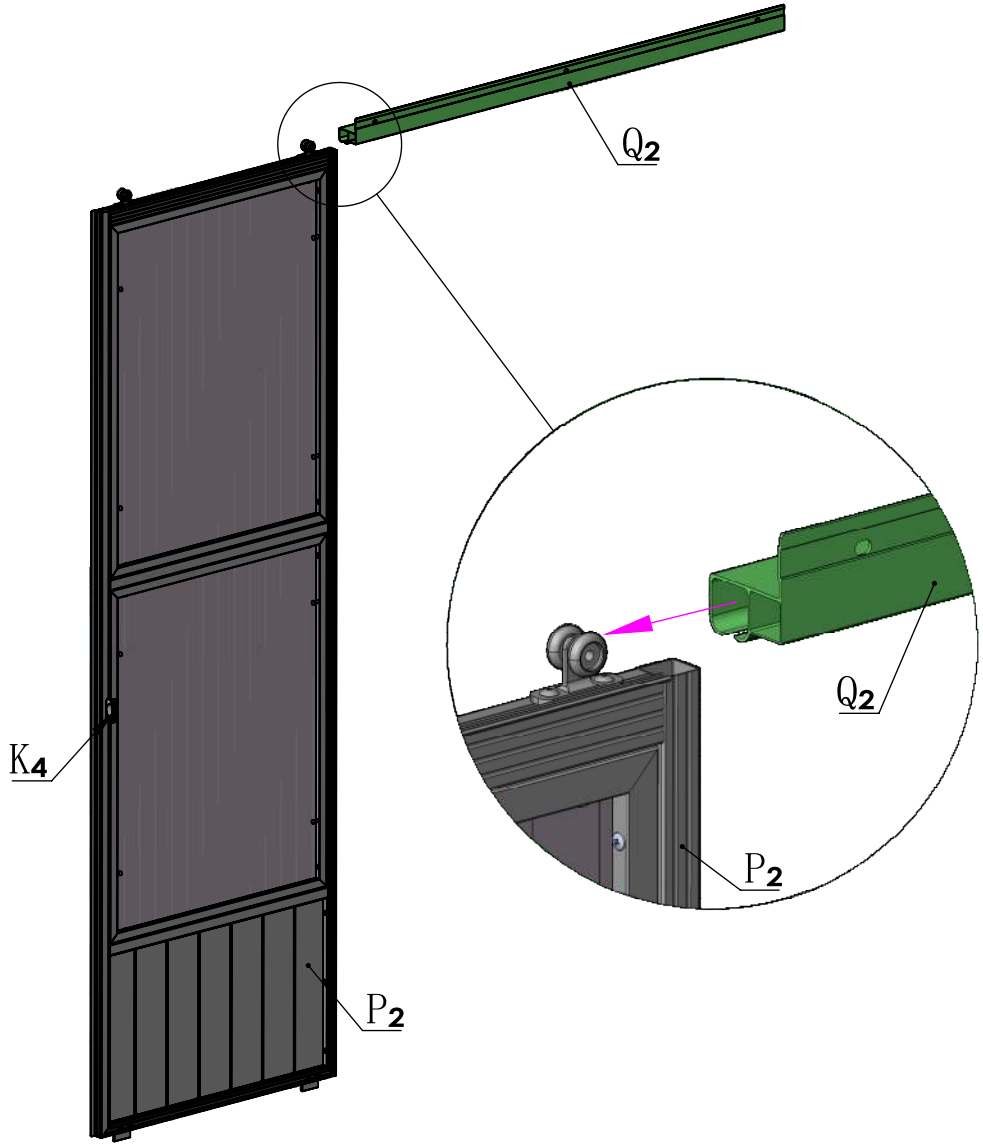

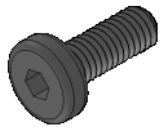

M6*16

4# 3X

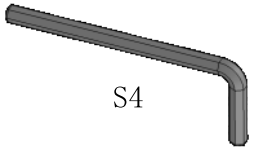

S4

23# 1X

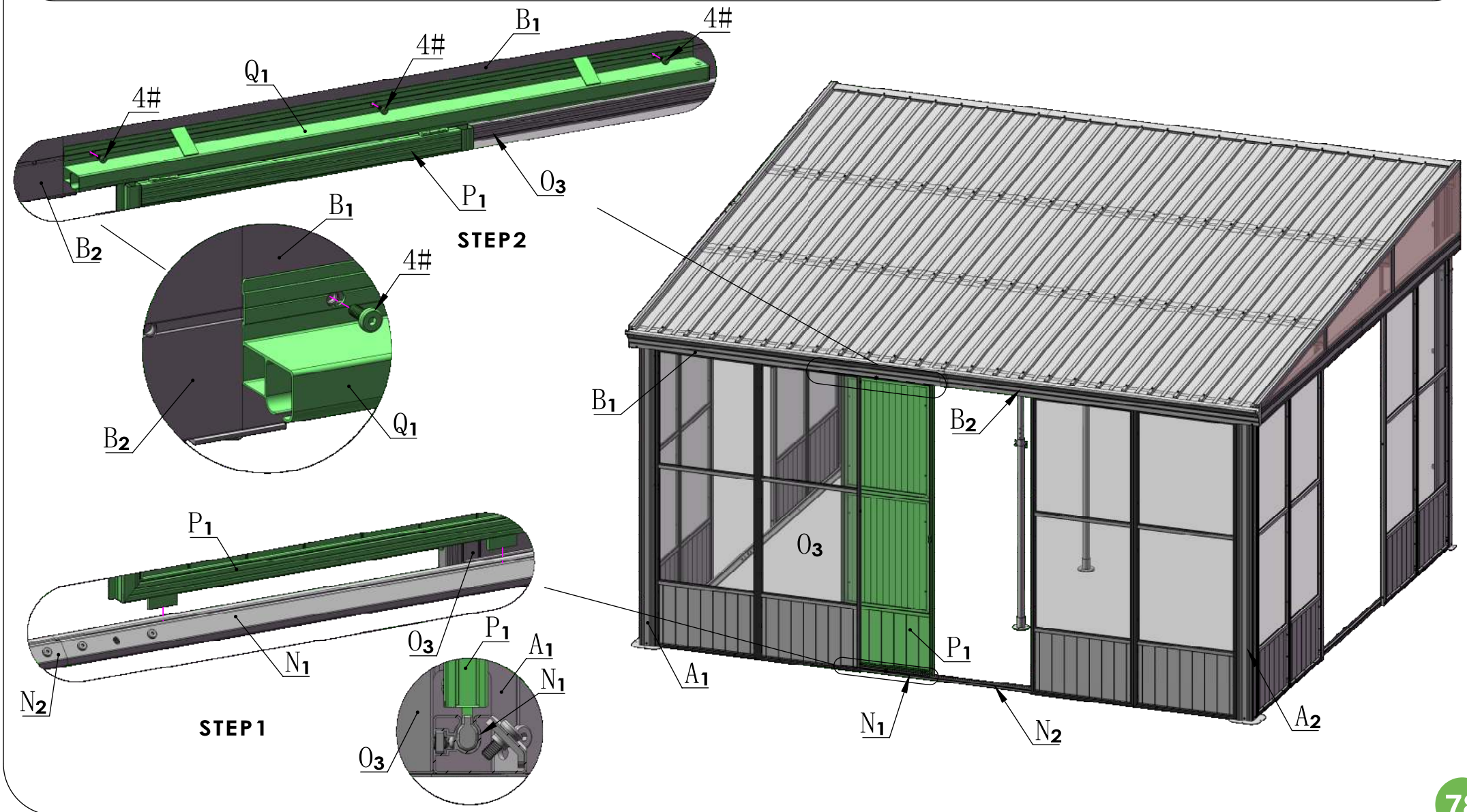



M6*16

4# 3X

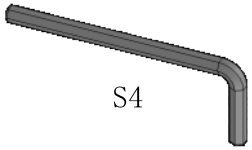

S4

23# 1X

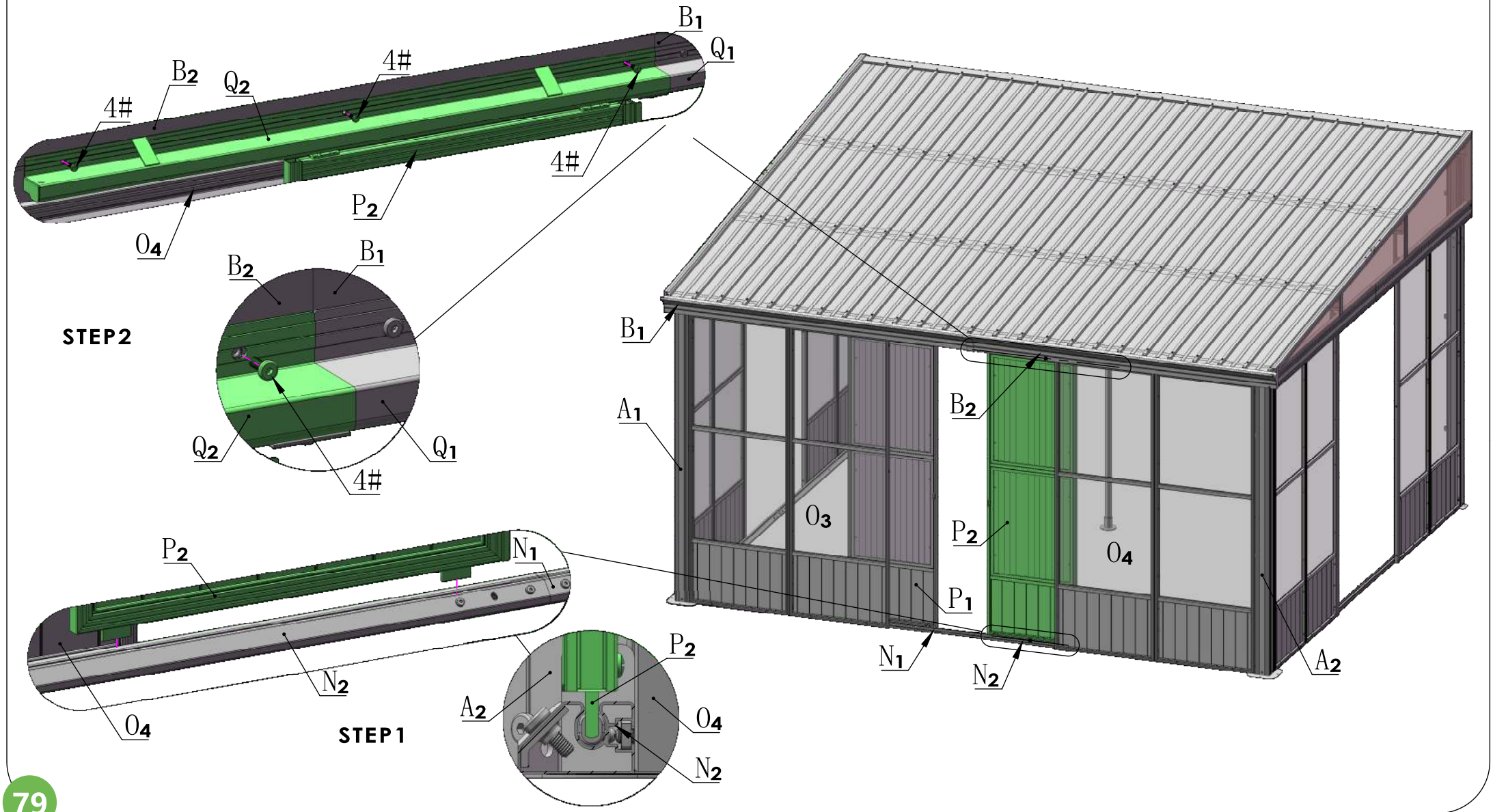

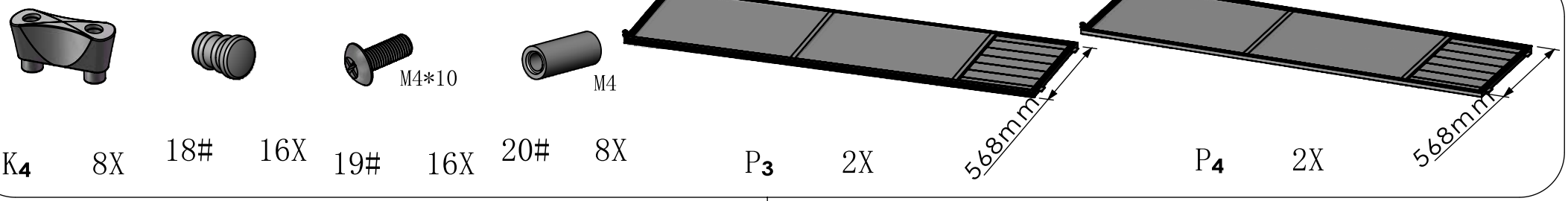

K4 8X 18# 16X 19# 16X 20# 8X P3 2X P4 2X

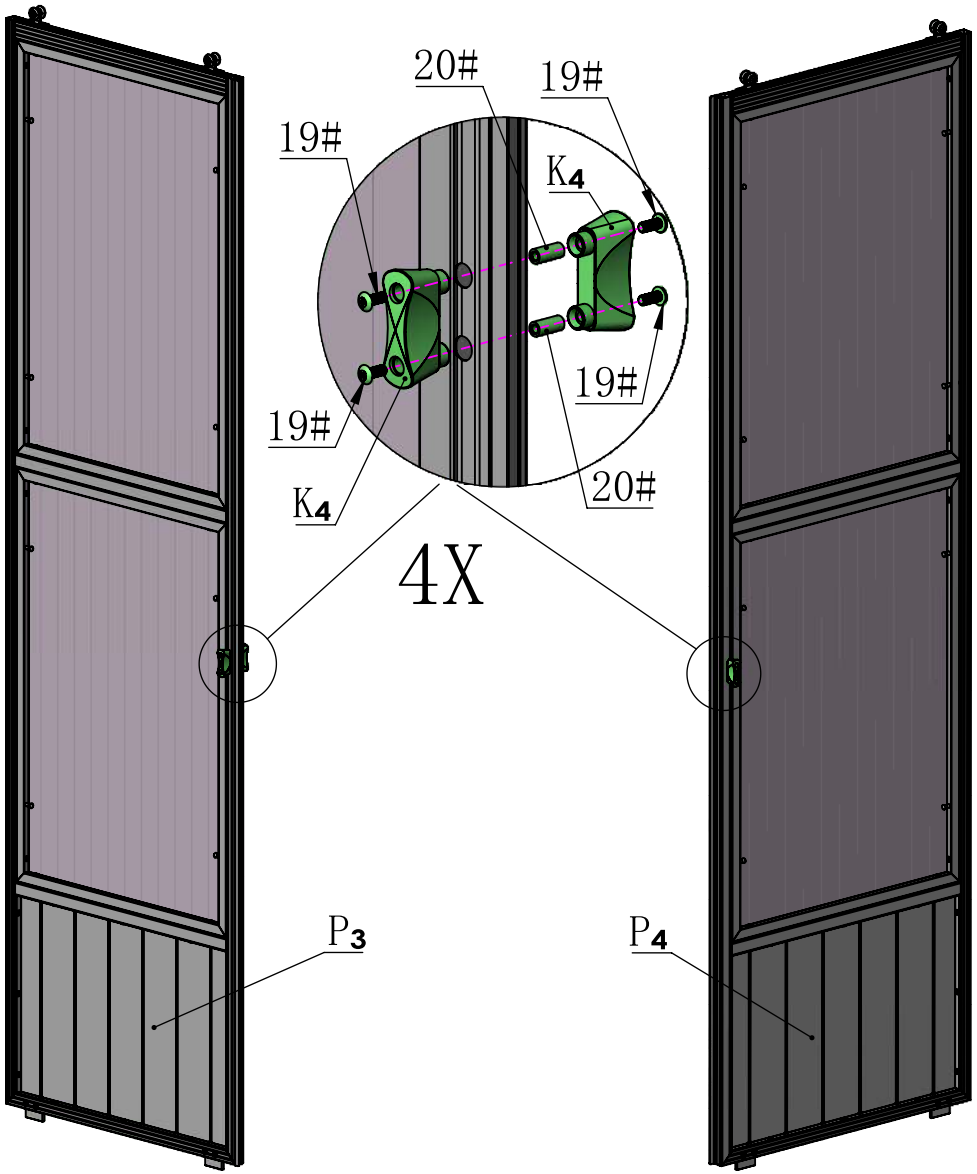

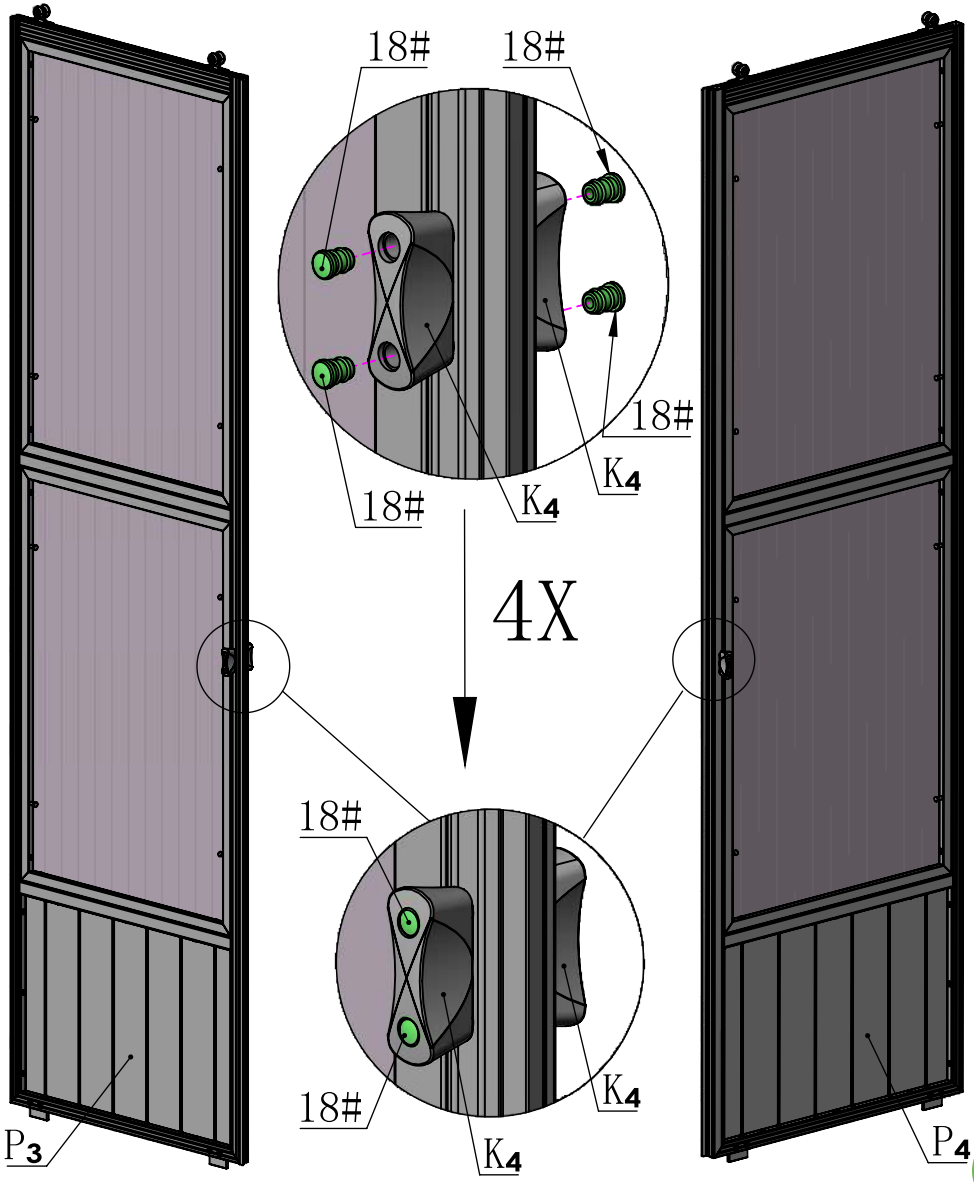

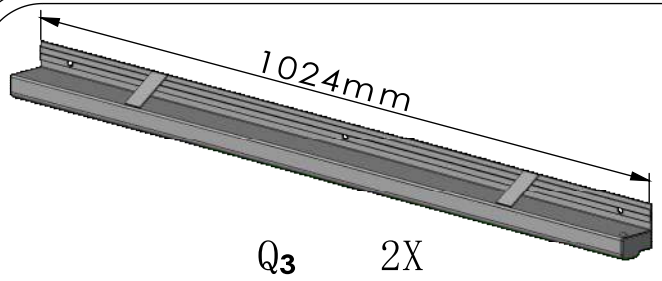

Q_3 2X

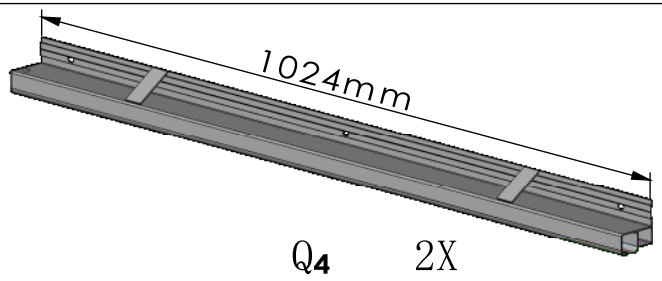

Q_4 2X

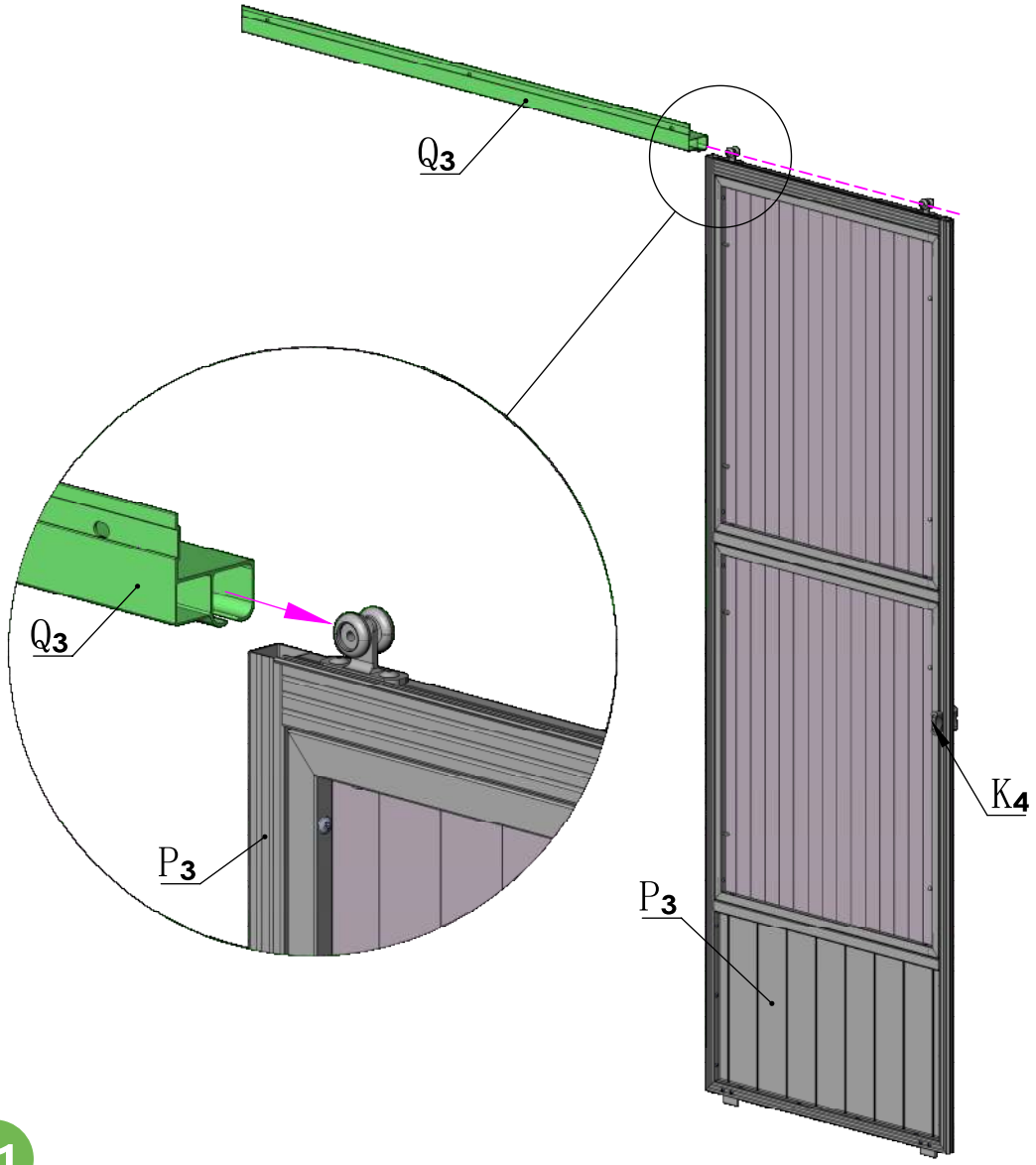

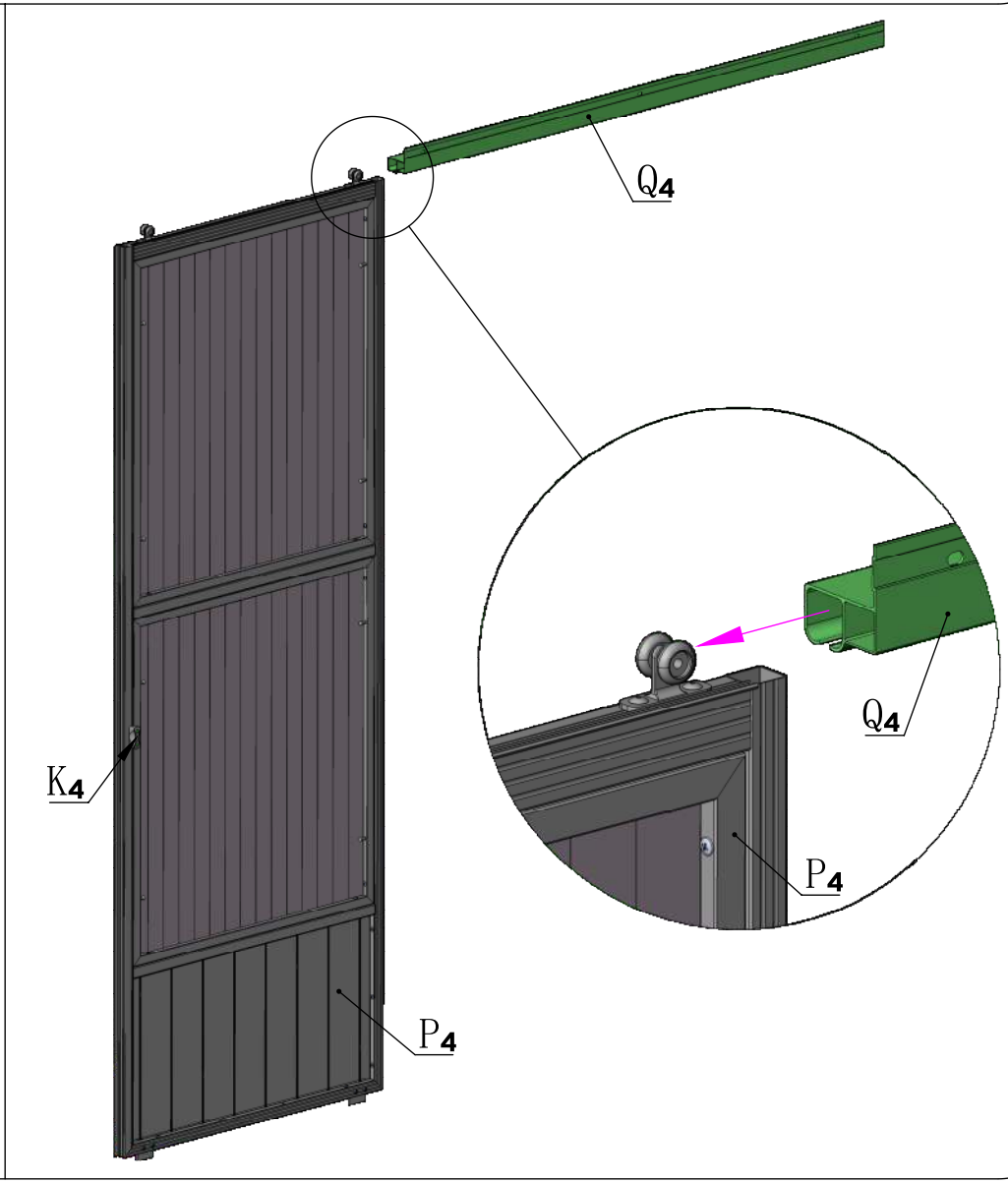

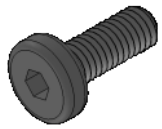

M6*16

4# 3X

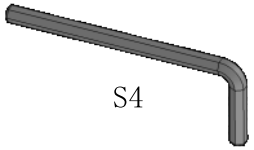

S4

23# 1X

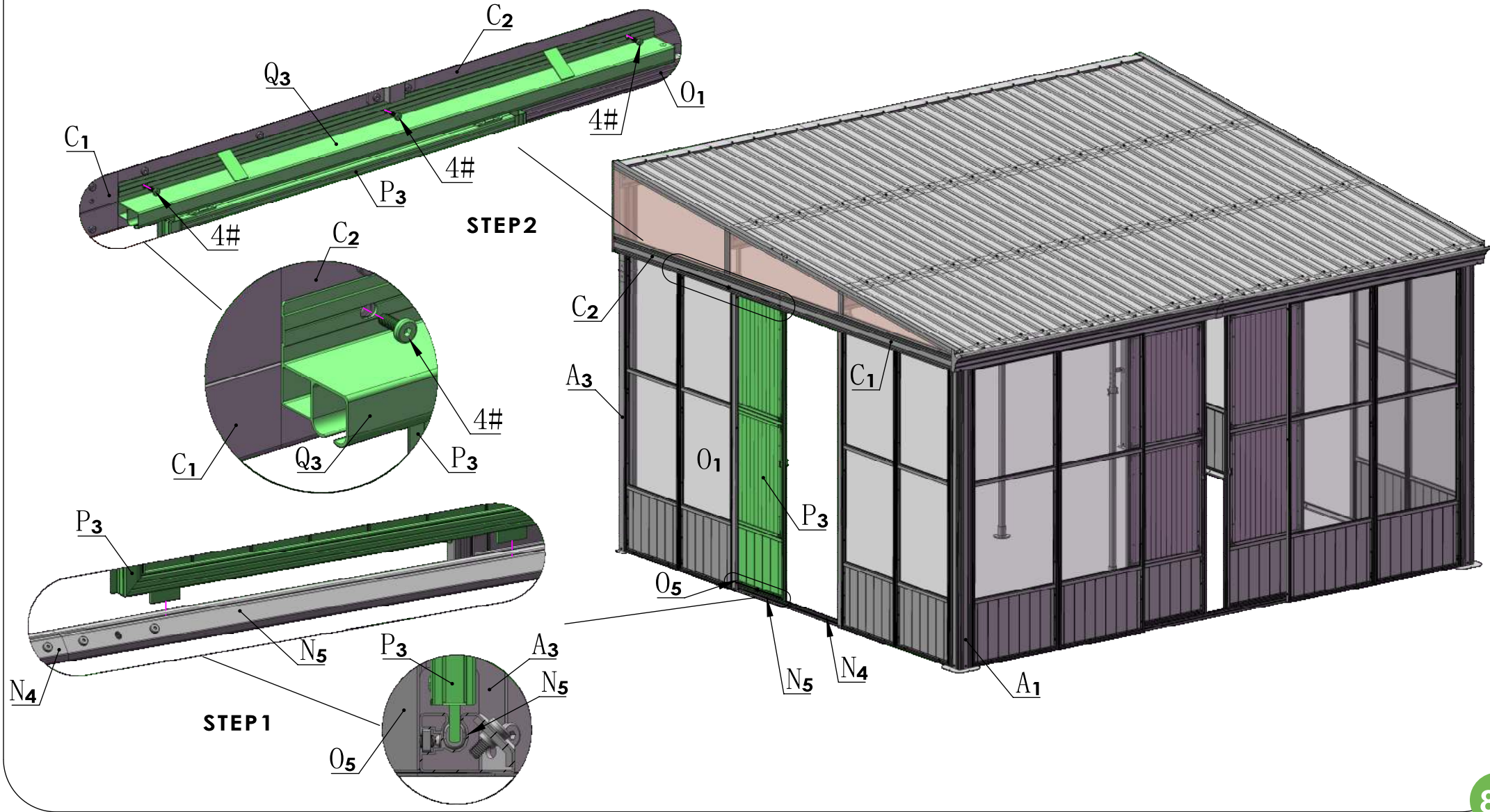



M6*16

4# 3X

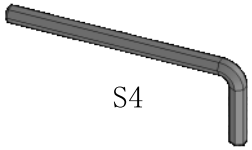

S4

23# 1X

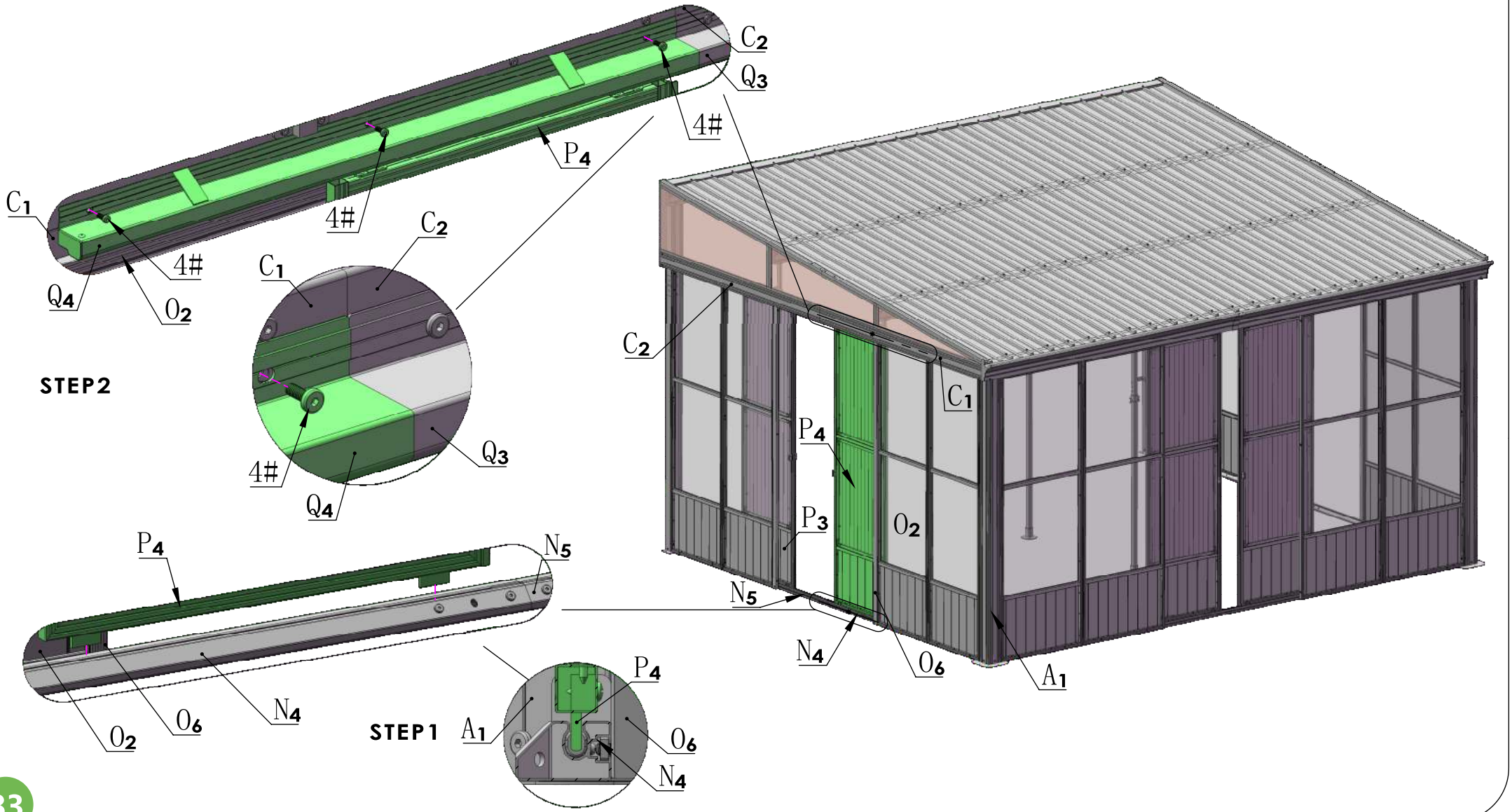



M6*16

4# 3X

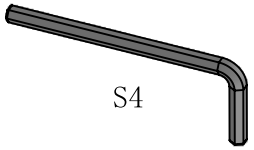

S4

23# 1X

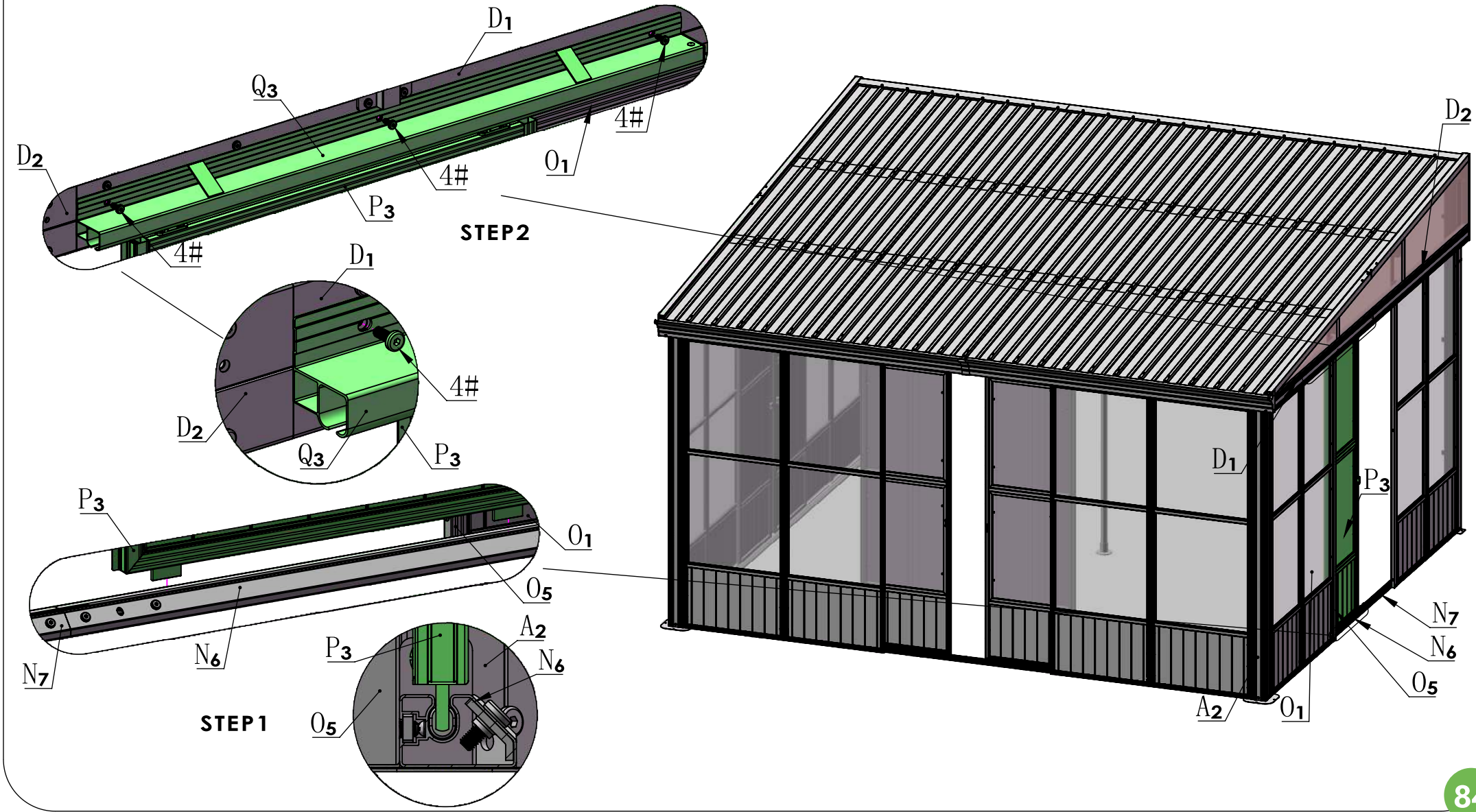



M6*16

4# 3X

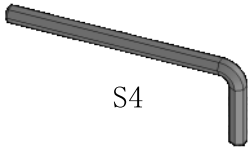

S4

23# 1X

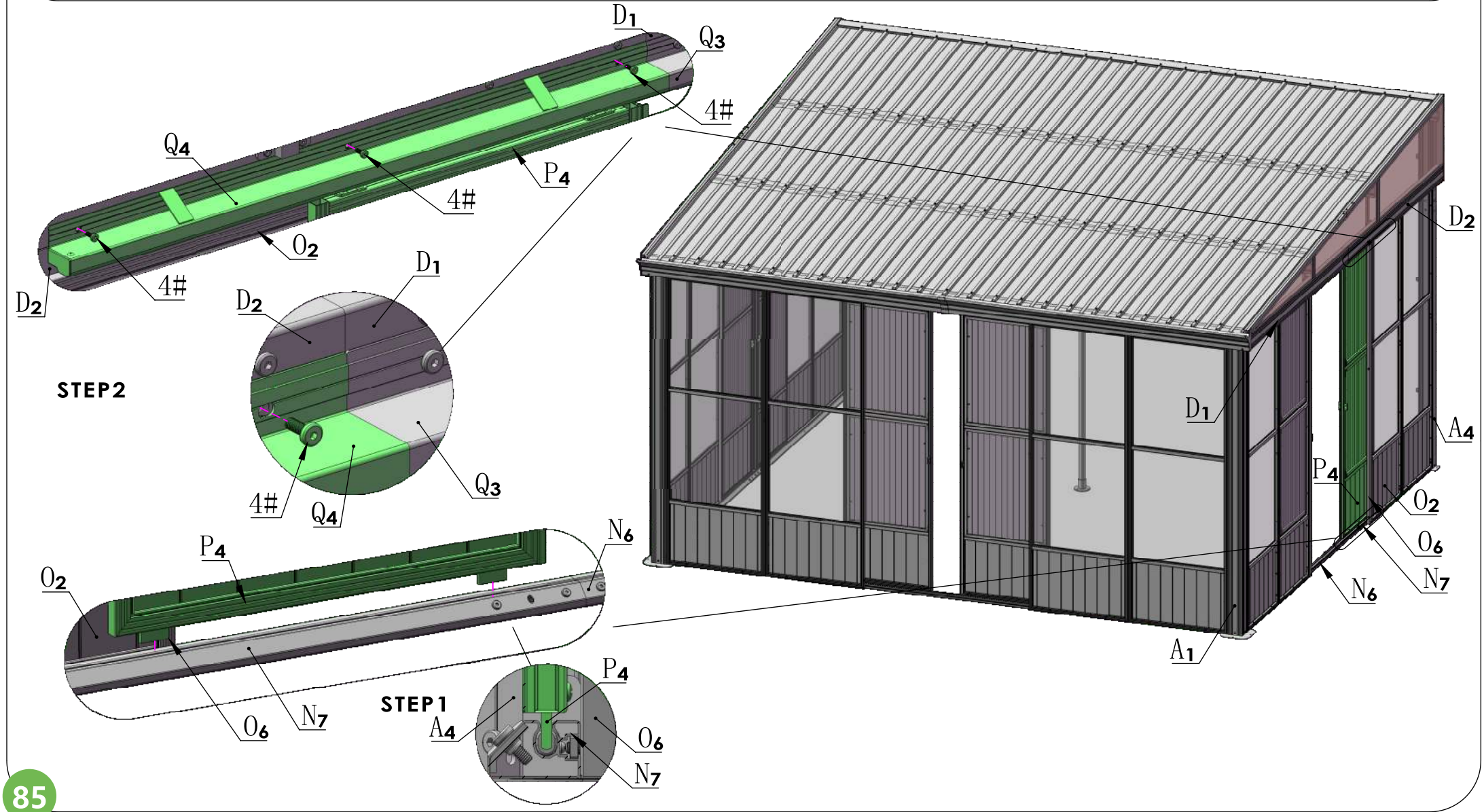

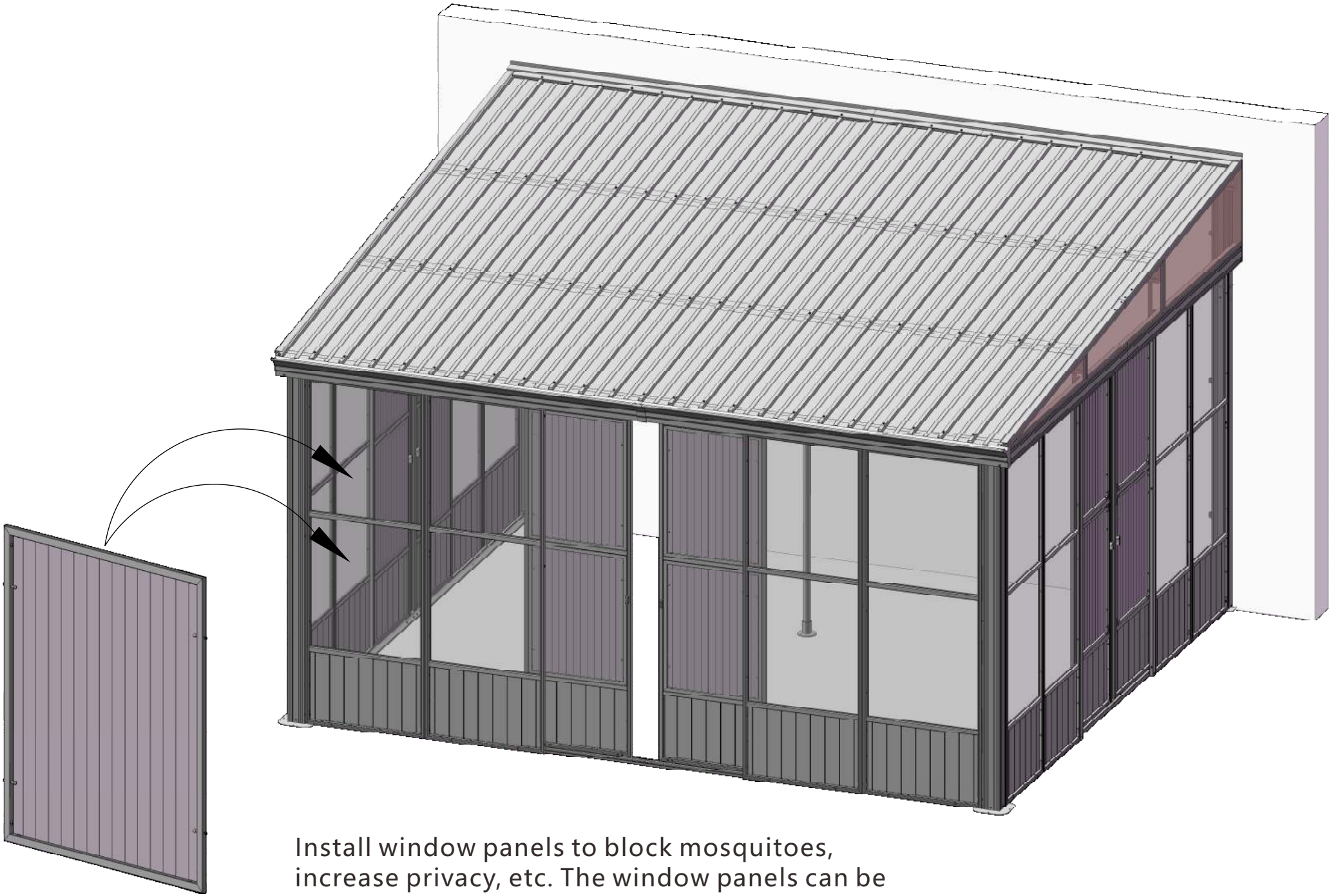

Install window panels to block mosquitoes, increase privacy, etc. The window panels can be removed as well to improve ventilation.

Care and Cleaning

Wash frame part with mild soap and water, rinse thoroughly.

Do not use bleach, or other solvents on the frame parts.

Please check periodically that the sunroom is anchored properly to the floor or ground to enjoy its safe usage.

Please check periodically that all screws are tight to maintain the solidity of the structure.

Please remove any snow accumulation at all times.

Warranty

Frames

Frames constructions are warranted to be free from defects in material and worksmanship for 1 year from item purchased. Damage to frame from negligence won't be covered by this warranty.

Bolts & nuts

Bolts and nuts are warranted to be free from defects in material and worksmanship for 1 year from item purchased. Damage from exposure to chemicals (including not only oils ,spills, fluids) won't be covered by this warranty.

Warranty Limitation

This warranty is for the original purchase order only. (Order number required). This warranty is non-transferable. Domi outdoor living is responsible for the free replacement part including shipping charges for the 1 year warranty.

Warranty Exclusion

This warranty does not cover products subject to negligence, abuse usage, inappropriate installation. Domi outdoor living reserves the right to explain warranty exclusions. When the replacement item is applied, the 1 year warranty automatically expires. Please feel free to contact us for applying warranty.

domi
outdoor living

RESORT COMFORT IN YOUR
OWN BACKYARD

Support:

Business cooperation contact email:
marketing@domioutdoorliving.com

After-sales contact email:
service@domioutdoorliving.com

Please tell us your order ID when contact.

Attach photos of damaged part for instant reply.