MULTI ZONE R32

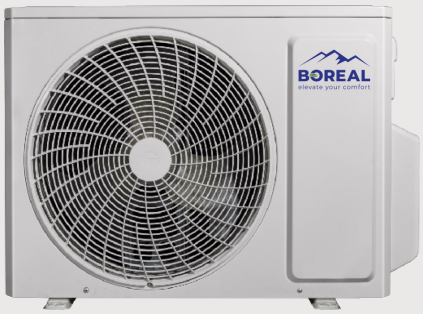

SERVICE MANUAL

Outdoor Unit

MODELS:

EMUL18HPJ132OA
EMUL24HPJ132OA
EMUL30HPJ132OA
EMUL36HPJ132OA
EMUL42HPJ132OA

Thank you for choosing our product.
Please read this Service Manual carefully before operation and retain it for future reference.

To download an electric version of this manual visit
https://www.borealheatpumps.com/system-documentation/

Table of Contents

Part I : Technical Information 1
1. Summary 1
2. Specifications 2
3. Outline Dimension Diagram 26
4. Refrigerant System Diagram 28
5. Electrical Part 32
5.1 Wiring Diagram 32
5.2 PCB Printed Diagram 38
6. Function and Control 42
Part II : Installation and Maintenance 44
7. Notes for Installation and Maintenance 44
8. Installation 51
8.1 Electrical Connections 52
8.2 Installing the Outdoor Unit 55
8.3 Bleeding 55
8.4 Maintenance 56
8.5 Installation Dimension Diagram 56
8.6 Check after Installation 57
9. Maintenance 58
9.1 Error Code List 58
9.2 Procedure of Troubleshooting 63
9.3 Troubleshooting for Normal Malfunction 75
10. Removal Procedure 77

Appendix 102

Appendix 1: Reference Sheet of Celsius and Fahrenheit 102

Appendix 2: Pipe Expanding Method 103

Appendix 3: List of Resistance for Temperature Sensor 104

Symbol	Explanation
	**This symbol shows that this appliance uses a flammable refrigerant. If the refrigerant is leaked and exposed to an external ignition source, there is a risk of fire. Appliance filled with flammable magas R32**
	**This symbol shows that the operation manual should be read carefully.**
	**This symbol shows that information is available such as the operating manual or installation manual.**
	**This symbol shows that a service personnel should be handling this equipment with reference to the installation manual.**

1. Summary

Model:

EMUL18HPJ132OA

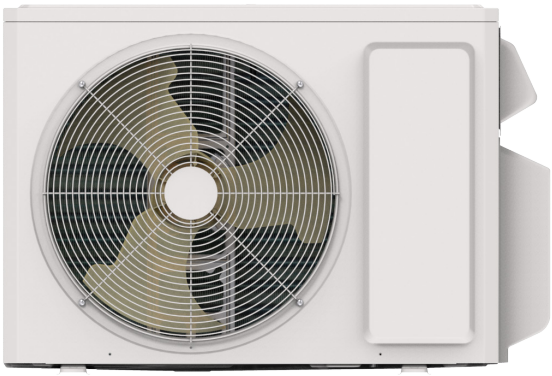

EMUL24HPJ132OA
EMUL30HPJ132OA

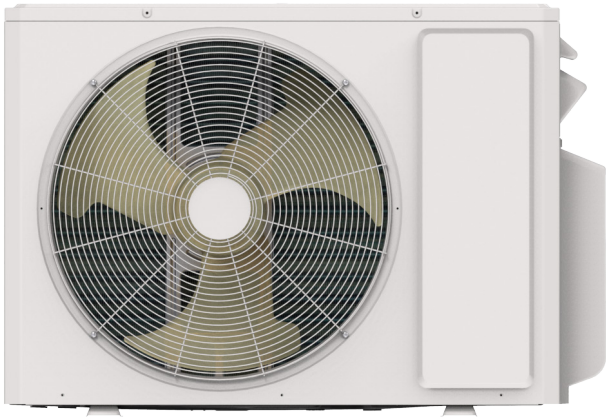

EMUL36HPJ132OA
EMUL42HPJ132OA



Model		-	EMUL18HPJ132OA
Product Code		-	CB228W23200
Power Supply	Rated Voltage	V~	208/230
	Rated Frequency	Hz	60
	Phases	-	1
Cross-sectional Area of Power Cable Conductor		mm^2	3G2.1(AWG14)
Cooling Capacity		Btu/h	18000
Heating Capacity		Btu/h	18000
Cooling Power Input		kW	1.6
Heating Power Input		kW	1.45
Cooling Current Input		A	6.96
Heating Current Input		A	6.3
Rated Input		kW	2.5
Rated Current		A	11
Air Flow Volume		CFM	1354
EER		(Btu/h)/W	11.26
COP		(Btu/h)/W	12.42
SEER		-	17
HSPF		-	8.5
Compressor Manufacturer		-	ZHUHAI LANDA COMPRESSOR CO., LTD.
Compressor Model		-	FTz-SM151AXBD
Compressor Refrigerant Oil Type		-	FW68DA or equivalent
Compressor Type		-	Twin Rotary
Compressor Locked Rotor Amp (L.R.A)		A	/
Compressor Rated Load Amp (RLA)		A	9.5
Compressor Power Input		W	1300
Compressor Thermal Protector		-	KSD115°C HPC115/95U1
Throttling Method		-	Electron expansion valve
Cooling Operation Ambient Temperature Range		°F	5~118
Heating Operation Ambient Temperature Range		°F	5~75.2
Condenser Material		-	Aluminum Fin-copper Tube
Condenser Pipe Diameter		mm	Φ7
Condenser Rows-fin Gap		mm	2-1.4
Condenser Coil Length (L×D×W)		mm	834×528×38.1
Fan Motor Speed		r/min	cooling900/heating900
Fan Motor Power Output		W	30
Motor Full Load Amp(FLA)		A	0.9
Fan Motor Capacitor		μF	/
Fan Type		-	Axial-flow
Fan Diameter		mm	Φ420-131.1
Defrosting Method		-	Automatic Defrosting
Climate Type		-	T1
Isolation		-	I
Moisture Protection		-	IPX4
Permissible Excessive Operating Pressure for the Discharge Side		MPa	4.3
Permissible Excessive Operating Pressure for the Suction Side		MPa	2.5
Sound Pressure Level		dB (A)	Mid:44/High:52
Sound Power Level		dB (A)	Mid:54/High:62

Dimension(WXHXD)	inch	32 23/64X21 21/32X13 55/64
Dimension of Carton Box (LXWXH)	inch	34 7/32X15 35/64X23 25/64
Dimension of Package(LXWXH)	inch	34 21/64X15 43/64X24 13/32
Net Weight	lb	77.2
Gross Weight	lb	83.8
Refrigerant	-	R32
Refrigerant Charge	oz	31.752
Not Additional Gas Connection Pipe Length	ft	65.62
Connection Pipe Gas Additional Charge	oz/ft.	0.2
Outer Diameter of Liquid Pipe(British System Allocation)		1/4"/1/4"
Outer Diameter of Gas Pipe(British System Allocation)		3/8"/3/8"
Connection Pipe Max. Height Distance(indoor and indoor)	ft	49.21
Connection Pipe Max. Height Distance(indoor and outdoor and indoor up)	ft	49.21
Connection Pipe Max. Height Distance(indoor and outdoor and outdoor up)	ft	49.21
Max. equivalent connection pipe length(outdoor to last indoor)	ft	65.62
Connection Pipe Max. Length Distance(total lenght)	ft	131.23

The above data is subject to change without notice; please refer to the nameplate of the unit.

Model		-	EMUL24HPJ132OA
Product Code		-	CB228W23500
Power Supply	Rated Voltage	V~	208/230
	Rated Frequency	Hz	60
	Phases	-	1
Cross-sectional Area of Power Cable Conductor		mm^2	3G3.3(AWG12)
Cooling Capacity		Btu/h	24000
Heating Capacity		Btu/h	24000
Cooling Power Input		kW	2.06
Heating Power Input		kW	1.84
Cooling Current Input		A	9.14
Heating Current Input		A	8.16
Rated Input		kW	3.4
Rated Current		A	14.2/15
Air Flow Volume		CFM	2236
EER		(Btu/h)/W	11.6
COP		(Btu/h)/W	13
SEER		-	17
HSPF		-	8.5
Compressor Manufacturer		-	ZHUHAI LANDA COMPRESSOR CO., LTD.
Compressor Model		-	QXFS-M180zX170
Compressor Refrigerant Oil Type		-	FW68DA or equivalent
Compressor Type		-	Twin Rotary
Compressor Locked Rotor Amp (L.R.A)		A	/
Compressor Rated Load Amp (RLA)		A	10.8
Compressor Power Input		W	1480
Compressor Thermal Protector		-	HPC115/95/KSD115°C
Throttling Method		-	Electron expansion valve
Cooling Operation Ambient Temperature Range		°F	5~118
Heating Operation Ambient Temperature Range		°F	5~75.2
Condenser Material		-	Aluminum Fin-copper Tube
Condenser Pipe Diameter		mm	Φ7
Condenser Rows-fin Gap		mm	2-1.4
Condenser Coil Length (L×D×W)		mm	851×616×38.1
Fan Motor Speed		r/min	cooling850/heating850
Fan Motor Power Output		W	60
Motor Full Load Amp(FLA)		A	1.5
Fan Motor Capacitor		μF	/
Fan Type		-	Axial-flow
Fan Diameter		mm	Φ520-154
Defrosting Method		-	Automatic Defrosting
Climate Type		-	T1
Isolation		-	I
Moisture Protection		-	IPX4
Permissible Excessive Operating Pressure for the Discharge Side		MPa	4.3
Permissible Excessive Operating Pressure for the Suction Side		MPa	2.5
Sound Pressure Level		dB (A)	Mid:49/High:55
Sound Power Level		dB (A)	Mid:59/High:65

Dimension(WXHXD)	inch	37 61/64X25 63/64X15 53/64
Dimension of Carton Box (LXWXH)	inch	40 33/64X17 53/64X28 5/32
Dimension of Package(LXWXH)	inch	40 5/8X17 61/64X29 1/64
Net Weight	lb	106.9
Gross Weight	lb	116.9
Refrigerant	-	R32
Refrigerant Charge	oz	59.976
Not Additional Gas Connection Pipe Length	ft	98.42
Connection Pipe Gas Additional Charge	oz/ft.	/
Outer Diameter of Liquid Pipe(British System Allocation)		1/4"/1/4"/1/4"
Outer Diameter of Gas Pipe(British System Allocation)		3/8"/3/8"/3/8"
Connection Pipe Max. Height Distance(indoor and indoor)	ft	49.21
Connection Pipe Max. Height Distance(indoor and outdoor and indoor up)	ft	49.21
Connection Pipe Max. Height Distance(indoor and outdoor and outdoor up)	ft	49.21
Max. equivalent connection pipe length(outdoor to last indoor)	ft	65.62
Connection Pipe Max. Length Distance(total lenght)	ft	196.85

The above data is subject to change without notice; please refer to the nameplate of the unit.

Model		-	EMUL30HPJ132OA
Product Code		-	CB228W23600
Power Supply	Rated Voltage	V~	208/230
	Rated Frequency	Hz	60
	Phases	-	1
Cross-sectional Area of Power Cable Conductor		mm^2	3G3.3(AWG12)
Cooling Capacity		Btu/h	30000
Heating Capacity		Btu/h	30000
Cooling Power Input		kW	2.75
Heating Power Input		kW	2.40
Cooling Current Input		A	11.97
Heating Current Input		A	10.65
Rated Input		kW	3.4
Rated Current		A	14.2/15
Air Flow Volume		CFM	2236
EER		(Btu/h)/W	11.1
COP		(Btu/h)/W	12.5
SEER		-	17
HSPF		-	8.5
Compressor Manufacturer		-	ZHUHAI LANDA COMPRESSOR CO., LTD.
Compressor Model		-	QXFS-B238zX070
Compressor Refrigerant Oil Type		-	FW68DA or equivalent
Compressor Type		-	Inverter Rotary
Compressor Locked Rotor Amp (L.R.A)		A	/
Compressor Rated Load Amp (RLA)		A	13.5
Compressor Power Input		W	2047
Compressor Thermal Protector		-	KSD115°CHPC115/95U1
Throttling Method		-	Electron expansion valve
Cooling Operation Ambient Temperature Range		°F	5~118
Heating Operation Ambient Temperature Range		°F	5~75.2
Condenser Material		-	Aluminum Fin-copper Tube
Condenser Pipe Diameter		mm	Φ7.94
Condenser Rows-fin Gap		mm	2-1.4
Condenser Coil Length (L×D×W)		mm	851×616×38.1
Fan Motor Speed		r/min	cooling850/heating850
Fan Motor Power Output		W	60
Motor Full Load Amp(FLA)		A	1.5
Fan Motor Capacitor		μF	/
Fan Type		-	Axial-flow
Fan Diameter		mm	Φ520-154
Defrosting Method		-	Automatic Defrosting
Climate Type		-	T1
Isolation		-	I
Moisture Protection		-	IPX4
Permissible Excessive Operating Pressure for the Discharge Side		MPa	4.3
Permissible Excessive Operating Pressure for the Suction Side		MPa	2.5
Sound Pressure Level		dB (A)	Mid:49/High:55
Sound Power Level		dB (A)	Mid:59/High:65

Dimension(WXHXD)	inch	37 61/64X25 63/64X15 53/64
Dimension of Carton Box (LXWXH)	inch	40 33/64X17 53/64X28 5/32
Dimension of Package(LXWXH)	inch	40 5/8X17 61/64X29 1/64
Net Weight	lb	114.7
Gross Weight	lb	124.6
Refrigerant	-	R32
Refrigerant Charge	oz	63.50
Not Additional Gas Connection Pipe Length	ft	98.42
Connection Pipe Gas Additional Charge	oz/ft.	/
Outer Diameter of Liquid Pipe(British System Allocation)		1/4"/1/4"/1/4"/1/4"
Outer Diameter of Gas Pipe(British System Allocation)		3/8"/3/8"/3/8"/3/8"
Connection Pipe Max. Height Distance(indoor and indoor)	ft	49.21
Connection Pipe Max. Height Distance(indoor and outdoor and indoor up)	ft	49.21
Connection Pipe Max. Height Distance(indoor and outdoor and outdoor up)	ft	49.21
Max. equivalent connection pipe length(outdoor to last indoor)	ft	65.62
Connection Pipe Max. Length Distance(total lenght)	ft	196.85

The above data is subject to change without notice; please refer to the nameplate of the unit.

Model		-	EMUL36HPJ132OA
Product Code		-	CB228W23400
Power Supply	Rated Voltage	V~	208/230
	Rated Frequency	Hz	60
	Phases	-	1
Cross-sectional Area of Power Cable Conductor		mm^2	3G5.3/AWG10
Cooling Capacity		Btu/h	36000
Heating Capacity		Btu/h	36000
Cooling Power Input		kW	3.1
Heating Power Input		kW	3
Cooling Current Input		A	13.75
Heating Current Input		A	13.3
Rated Input		kW	5.2
Rated Current		A	21.73/22.6
Air Flow Volume		CFM	3413
EER		(Btu/h)/W	11.6
COP		(Btu/h)/W	12
SEER		-	17
HSPF		-	8.5
Compressor Manufacturer		-	ZHUHAI LANDA COMPRESSOR CO.,LTD.
Compressor Model		-	QXFS-D280zX070C
Compressor Refrigerant Oil Type		-	FW68DA or equivalent
Compressor Type		-	Twin Rotary
Compressor Locked Rotor Amp (L.R.A)		A	/
Compressor Rated Load Amp (RLA)		A	16
Compressor Power Input		W	2294
Compressor Thermal Protector		-	KSD115°CHPC115/95U1
Throttling Method		-	Electron expansion valve
Cooling Operation Ambient Temperature Range		°F	5~118
Heating Operation Ambient Temperature Range		°F	5~75.2
Condenser Material		-	Aluminum Fin-copper Tube
Condenser Pipe Diameter		mm	Φ7.94
Condenser Rows-fin Gap		mm	2-1.4
Condenser Coil Length (L×D×W)		mm	1066×792×38.1
Fan Motor Speed		r/min	cooling860/heating860
Fan Motor Power Output		W	130
Motor Full Load Amp(FLA)		A	2.5
Fan Motor Capacitor		μF	/
Fan Type		-	Axial-flow
Fan Diameter		mm	Φ550-205
Defrosting Method		-	Automatic Defrosting
Climate Type		-	T1
Isolation		-	I
Moisture Protection		-	IPX4
Permissible Excessive Operating Pressure for the Discharge Side		MPa	4.3
Permissible Excessive Operating Pressure for the Suction Side		MPa	2.5
Sound Pressure Level		dB (A)	Mid:52/High:60
Sound Power Level		dB (A)	Mid:62/High:70

Dimension(WXHXD)	inch	40 5/32 X 32 33/64 X 16 13/16
Dimension of Carton Box (LXWXH)	inch	42 29/32 X 19 29/64 X 34 1/4
Dimension of Package(LXWXH)	inch	43 1/32 X 19 9/16 X 34 27/32
Net Weight	lb	158.7
Gross Weight	lb	174.17
Refrigerant	-	R32
Refrigerant Charge	oz	84.66
Not Additional Gas Connection Pipe Length	ft	131.2
Connection Pipe Gas Additional Charge	oz/ft.	0.2
Outer Diameter of Liquid Pipe(British System Allocation)		1/4"/1/4"/1/4"/1/4"
Outer Diameter of Gas Pipe(British System Allocation)		3/8"/3/8"/3/8"/3/8"
Connection Pipe Max. Height Distance(indoor and indoor)	ft	82.02
Connection Pipe Max. Height Distance(indoor and outdoor and indoor up)	ft	82.02
Connection Pipe Max. Height Distance(indoor and outdoor and outdoor up)	ft	82.02
Max. equivalent connection pipe length(outdoor to last indoor)	ft	82.02
Connection Pipe Max. Length Distance(total lenght)	ft	262.46

The above data is subject to change without notice; please refer to the nameplate of the unit.

Model		-	EMUL42HPJ132OA
Product Code		-	CB228W23300
Power Supply	Rated Voltage	V~	208/230
	Rated Frequency	Hz	60
	Phases	-	1
Cross-sectional Area of Power Cable Conductor		mm^2	3G5.3/AWG10
Cooling Capacity		Btu/h	42000
Heating Capacity		Btu/h	42000
Cooling Power Input		kW	3.75
Heating Power Input		kW	3.2
Cooling Current Input		A	16.63
Heating Current Input		A	14.2
Rated Input		kW	5.2
Rated Current		A	21.73/22.6
Air Flow Volume		CFM	3413
EER		(Btu/h)/W	11
COP		(Btu/h)/W	13
SEER		-	17
HSPF		-	8.5
Compressor Manufacturer		-	ZHUHAI LANDA COMPRESSOR CO.,LTD.
Compressor Model		-	QXFS-D280zX070C
Compressor Refrigerant Oil Type		-	FW68DA or equivalent
Compressor Type		-	Twin Rotary
Compressor Locked Rotor Amp (L.R.A)		A	/
Compressor Rated Load Amp (RLA)		A	16
Compressor Power Input		W	2294
Compressor Thermal Protector		-	KSD115°CHPC115/95U1
Throttling Method		-	Electron expansion valve
Cooling Operation Ambient Temperature Range		°F	5~118
Heating Operation Ambient Temperature Range		°F	5~75.2
Condenser Material		-	Aluminum Fin-copper Tube
Condenser Pipe Diameter		mm	Φ7.94
Condenser Rows-fin Gap		mm	2-1.4
Condenser Coil Length (L×D×W)		mm	1066×792×38.1
Fan Motor Speed		r/min	cooling860/heating860
Fan Motor Power Output		W	130
Motor Full Load Amp(FLA)		A	2.5
Fan Motor Capacitor		μF	/
Fan Type		-	Axial-flow
Fan Diameter		mm	Φ550-205
Defrosting Method		-	Automatic Defrosting
Climate Type		-	T1
Isolation		-	I
Moisture Protection		-	IPX4
Permissible Excessive Operating Pressure for the Discharge Side		MPa	4.3
Permissible Excessive Operating Pressure for the Suction Side		MPa	2.5
Sound Pressure Level		dB (A)	Mid:53/High:61
Sound Power Level		dB (A)	Mid:63/High:71

Dimension(WXHXD)	inch	40 5/32 X 32 33/64 X 16 13/16
Dimension of Carton Box (LXWXH)	inch	42 29/32 X 19 29/64 X 34 1/4
Dimension of Package(LXWXH)	inch	43 1/32 X 19 9/16 X 34 27/32
Net Weight	lb	160.94
Gross Weight	lb	176.34
Refrigerant	-	R32
Refrigerant Charge	oz	84.66
Not Additional Gas Connection Pipe Length	ft	164
Connection Pipe Gas Additional Charge	oz/ft.	0.2
Outer Diameter of Liquid Pipe(British System Allocation)		1/4"/1/4"/1/4"/1/4"/1/4"
Outer Diameter of Gas Pipe(British System Allocation)		3/8"/3/8"/3/8"/3/8"/3/8"
Connection Pipe Max. Height Distance(indoor and indoor)	ft	82.02
Connection Pipe Max. Height Distance(indoor and outdoor and indoor up)	ft	82.02
Connection Pipe Max. Height Distance(indoor and outdoor and outdoor up)	ft	82.02
Max. equivalent connection pipe length(outdoor to last indoor)	ft	82.02
Connection Pipe Max. Length Distance(total lenght)	ft	328.08

The above data is subject to change without notice; please refer to the nameplate of the unit.

3. Outline Dimension Diagram

EMUL18HPJ132OA

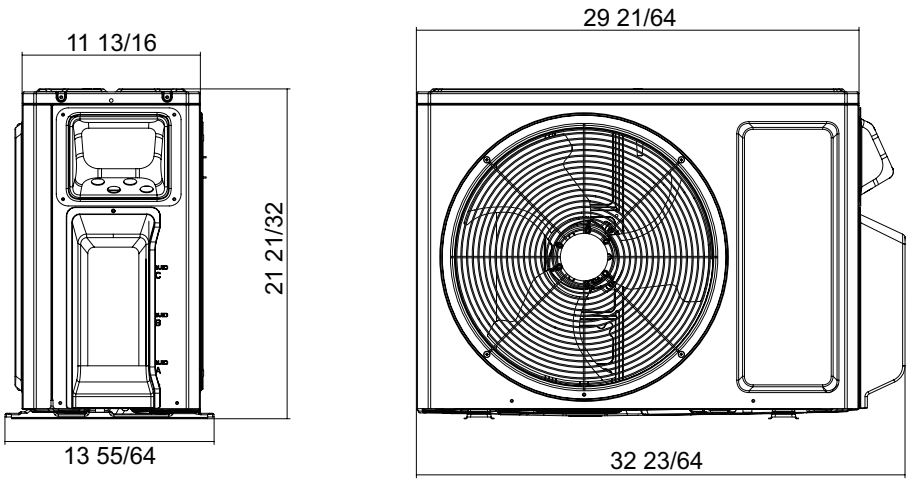

Unit: inch

EMUL24HPJ132OA EMUL30HPJ132O

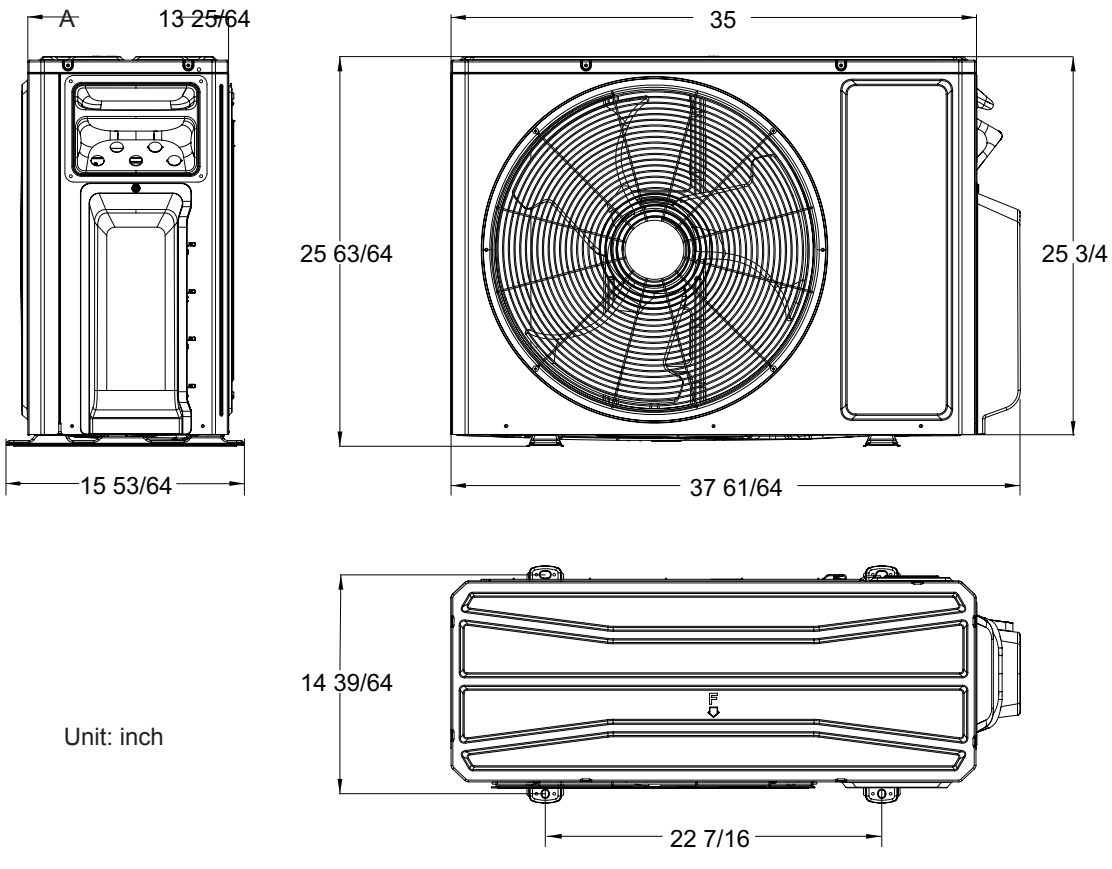

Unit: inch

EMUL36HPJ132OA

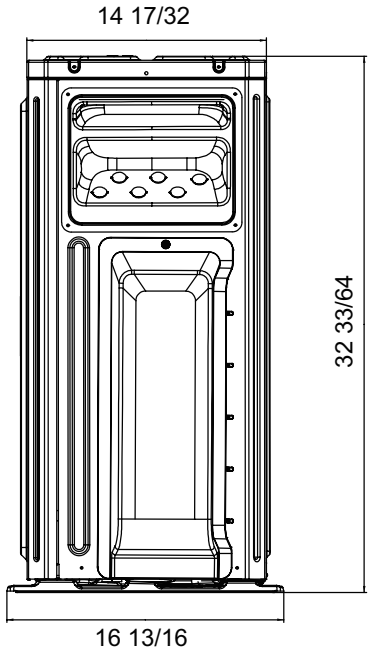

EMUL42HPJ132OA

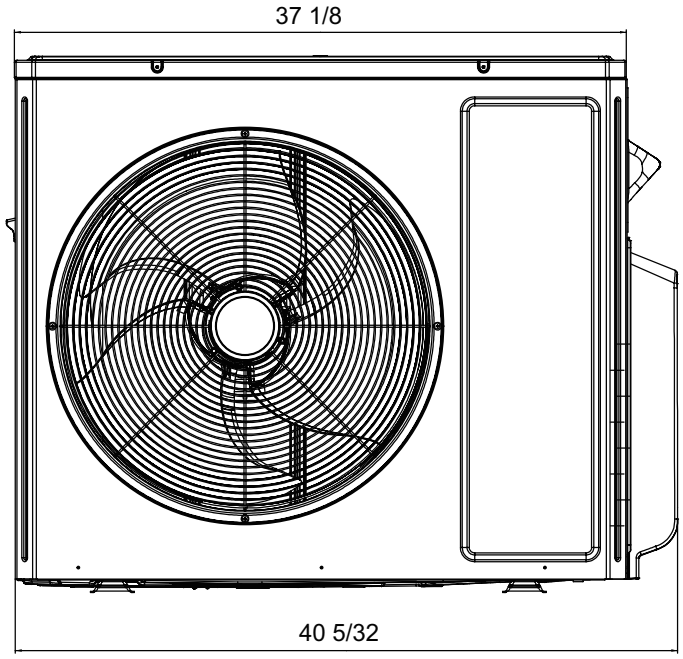

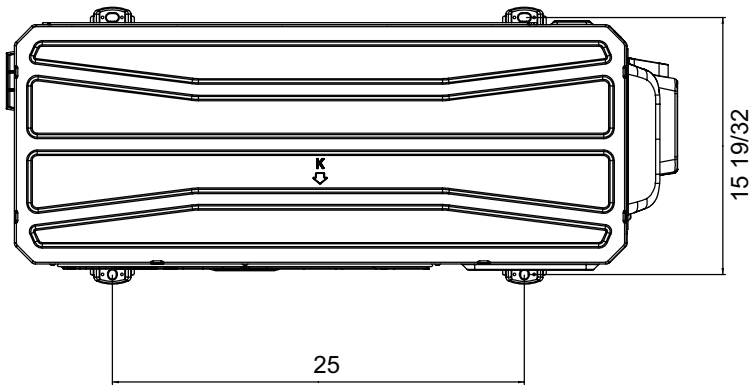

Unit: inch

4. Refrigerant System Diagram

EMUL18HPJ132OA

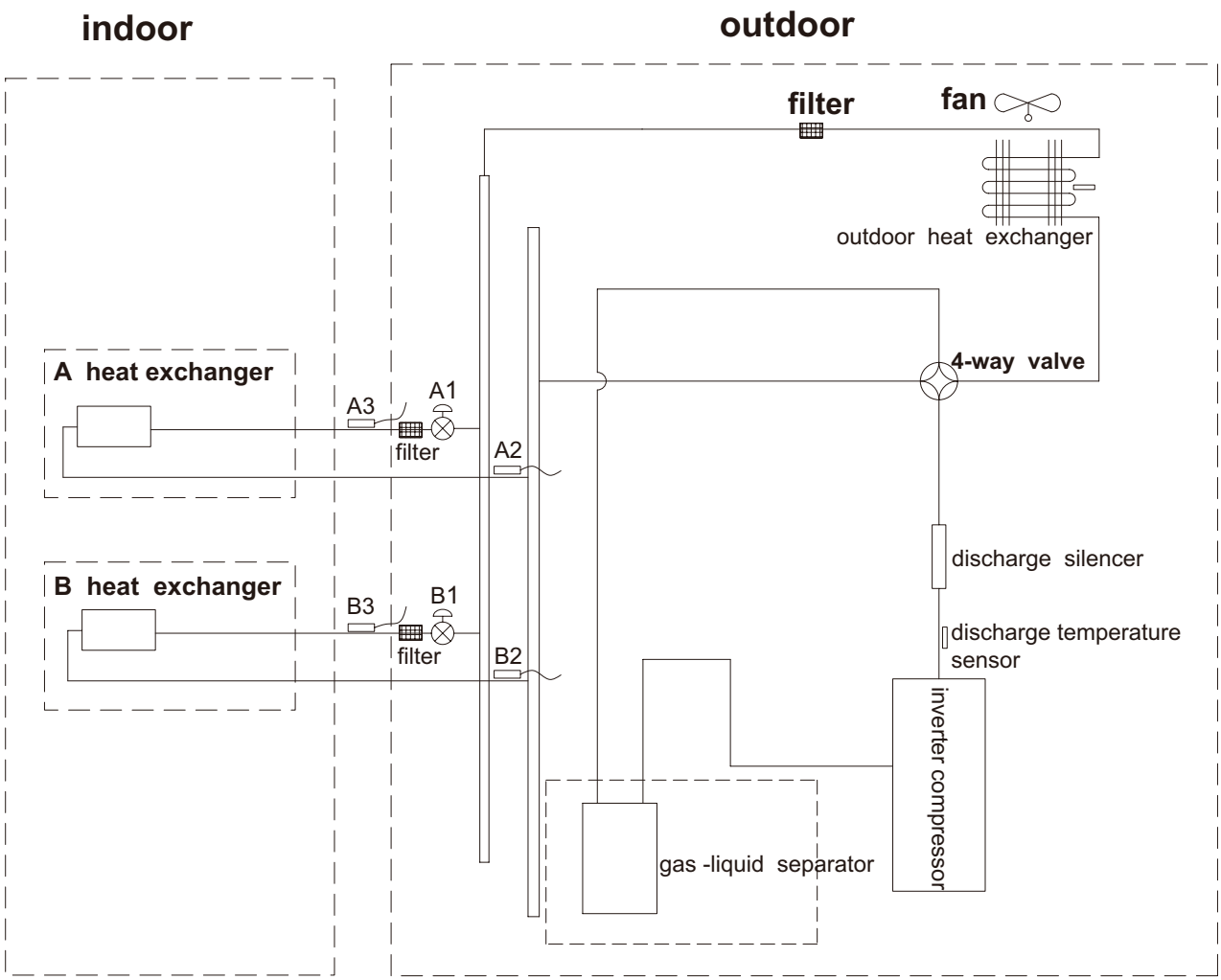

A1: A-unit electronic expansion valve
B1: B-unit electronic expansion valve

A2: A-unit gas pipe temperature sensor
B2: B-unit gas pipe temperature sensor

A3: A-unit liquid pipe temperature sensor
B3: B-unit liquid pipe temperature sensor

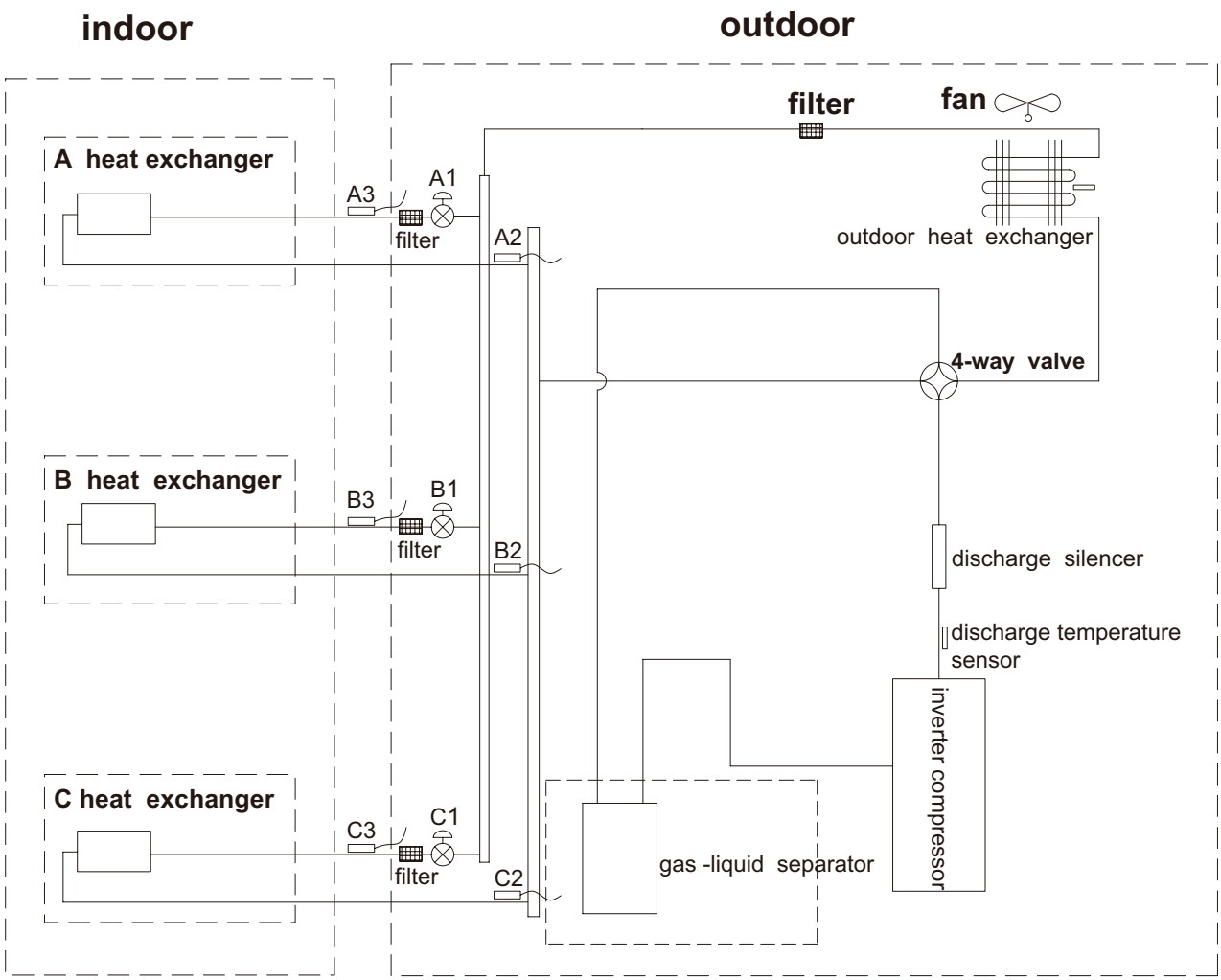

A1: A-unit electronic expansion valve
B1: B-unit electronic expansion valve
C1: C-unit electronic expansion valve

A2: A-unit gas pipe temperature sensor
B2: B-unit gas pipe temperature sensor
C2: C-unit gas pipe temperature sensor

A3: A-unit liquid pipe temperature sensor
B3: B-unit liquid pipe temperature sensor
C3: C-unit liquid pipe temperature sensor

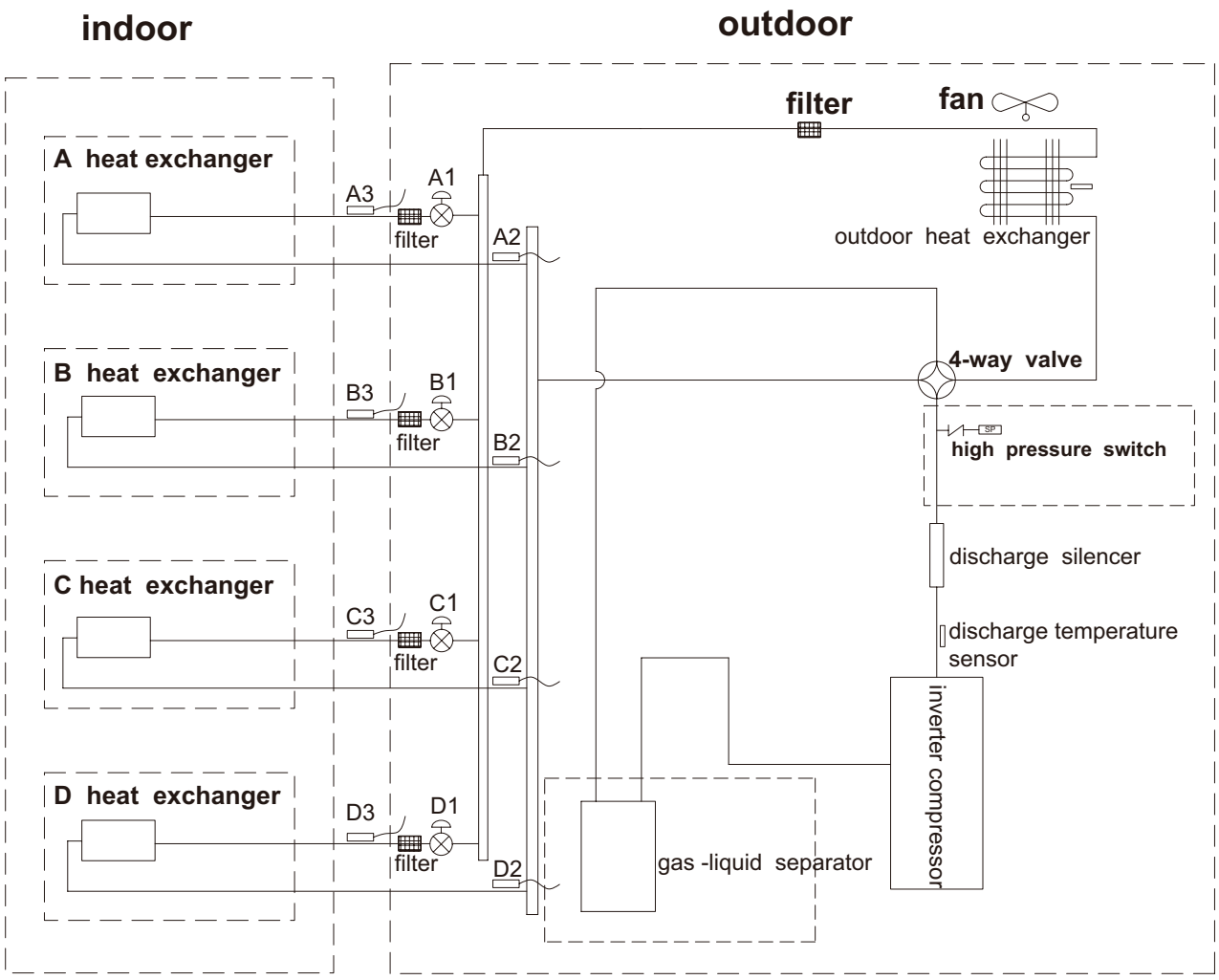

A1: A-unit electronic expansion valve
B1: B-unit electronic expansion valve
C1: C-unit electronic expansion valve
D1: D-unit electronic expansion valve

A2: A-unit gas pipe temperature sensor
B2: B-unit gas pipe temperature sensor
C2: C-unit gas pipe temperature sensor
D2: D-unit gas pipe temperature sensor

A3: A-unit liquid pipe temperature sensor
B3: B-unit liquid pipe temperature sensor
C3: C-unit liquid pipe temperature sensor
D3: D-unit liquid pipe temperature sensor

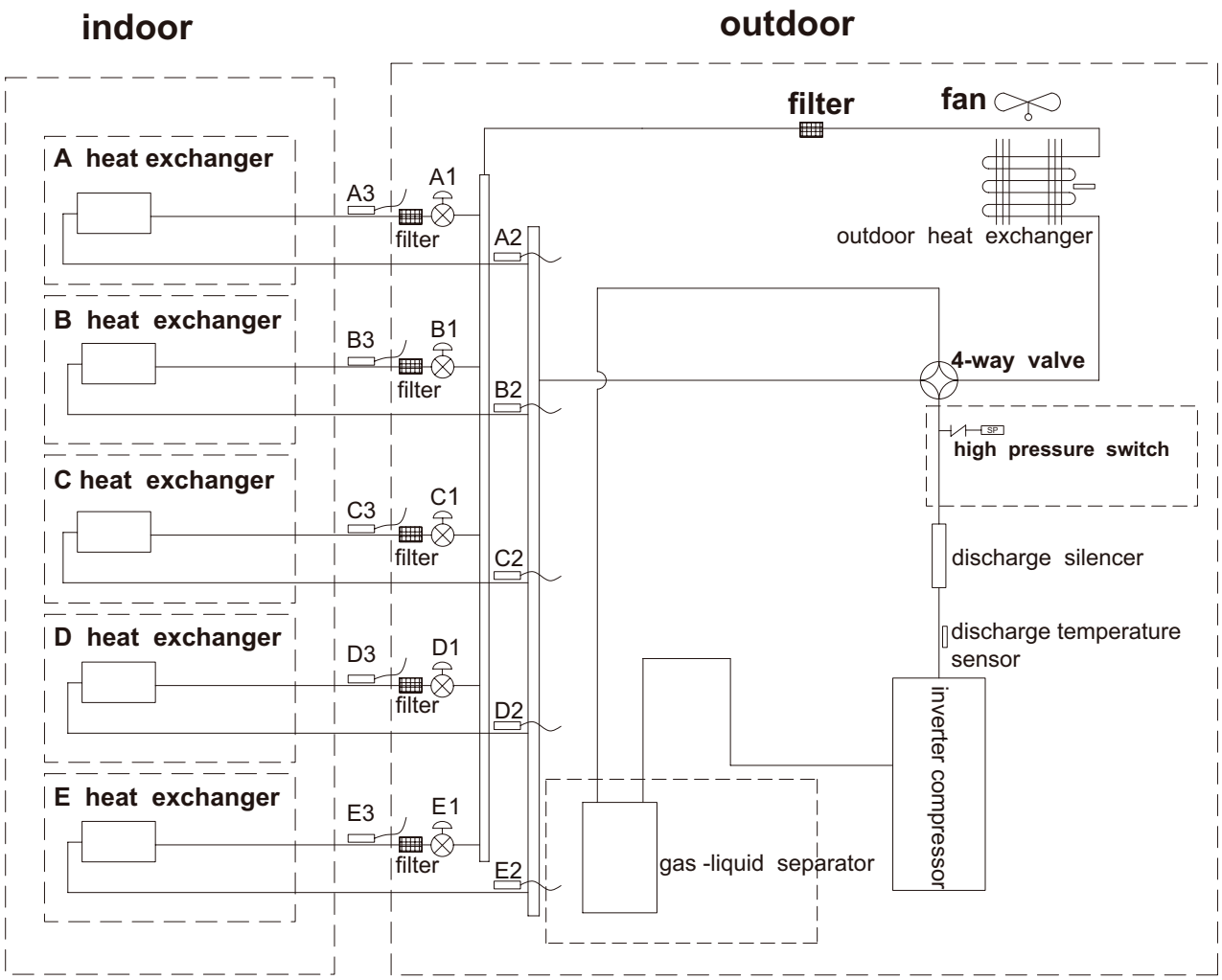

A1: A-unit electronic expansion valve
B1: B-unit electronic expansion valve
C1: C-unit electronic expansion valve
D1: D-unit electronic expansion valve
E1: E-unit electronic expansion valve

A2: A-unit gas pipe temperature sensor
B2: B-unit gas pipe temperature sensor
C2: C-unit gas pipe temperature sensor
D2: D-unit gas pipe temperature sensor
E2: E-unit gas pipe temperature sensor

A3: A-unit liquid pipe temperature sensor
B3: B-unit liquid pipe temperature sensor
C3: C-unit liquid pipe temperature sensor
D3: D-unit liquid pipe temperature sensor
E3: E-unit liquid pipe temperature sensor

5. Electrical Part

5.1 Wiring Diagram

●Instruction

Symbol	Symbol Color	Symbol	Symbol Color	Symbol	Name
WH	White	GN	Green	COMP	Compressor
YE	Yellow	BN	Brown	⏚	Grounding wire
RD	Red	BU	Blue	/	/
YEGN	Yellow/Green	BK	Black	/	/
VT	Violet	OG	Orange	/	/

● Outdoor Unit

EMUL18HPJ132OA

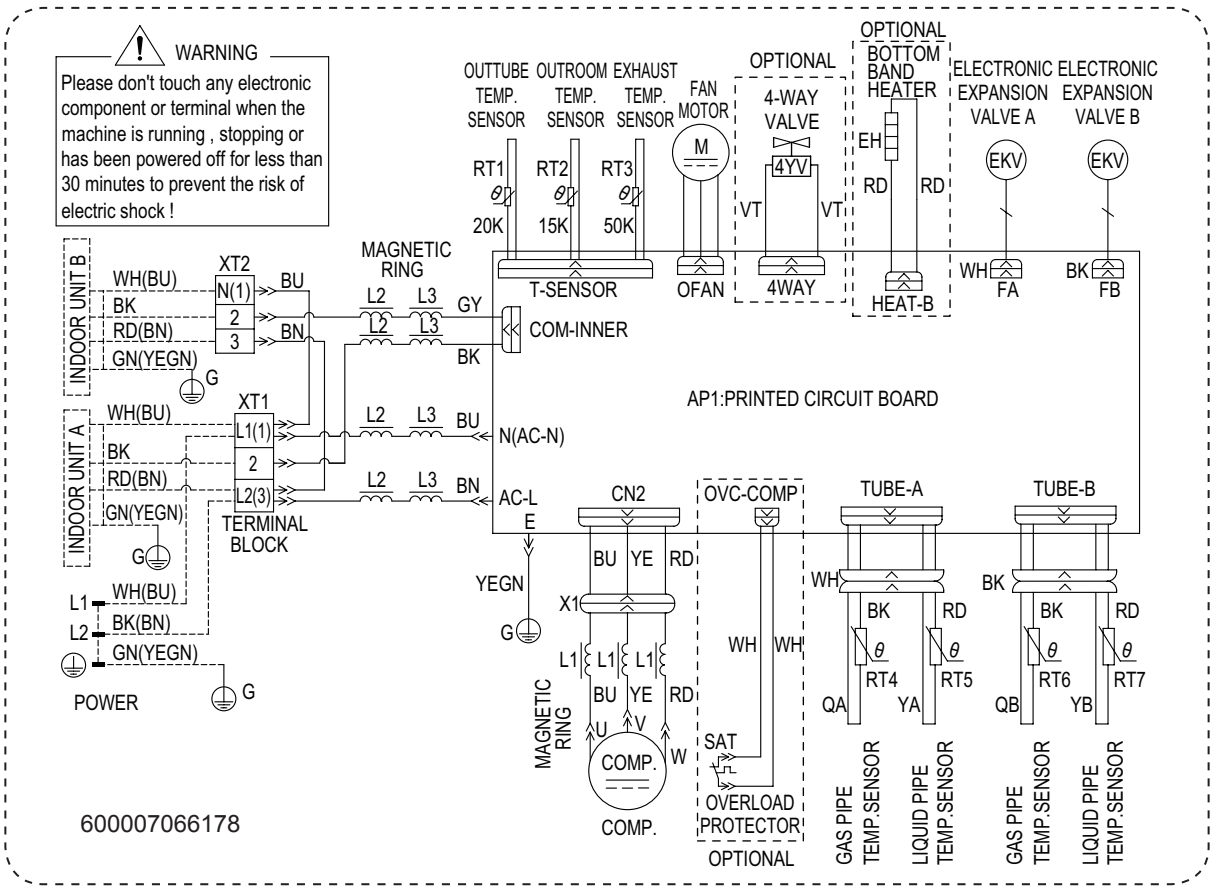

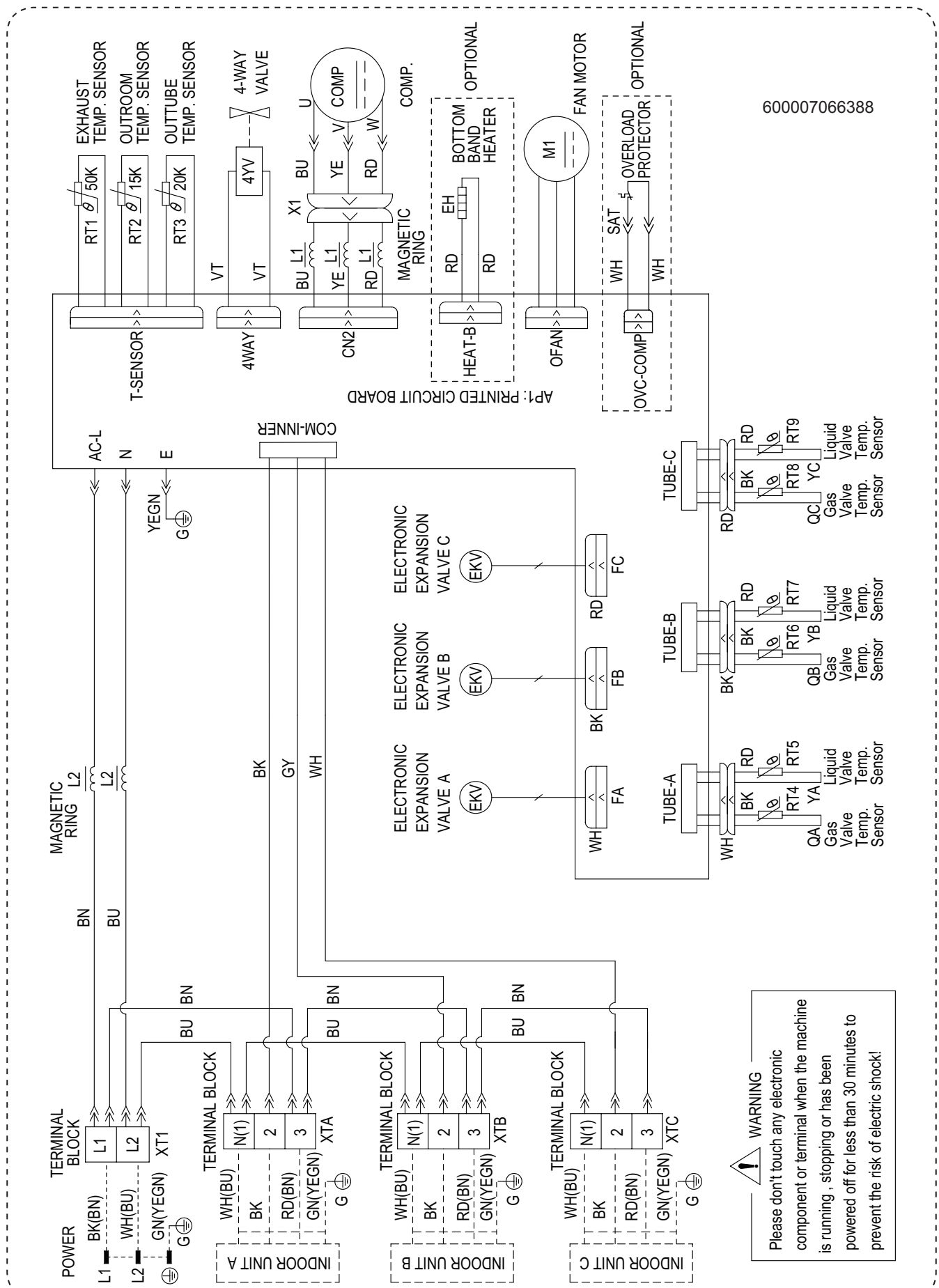
600007066388
POWER
L1
L2
BK(BN)
WH(BU)
GN(YEGN)
G
TERMINAL BLOCK
L1
L2
XT1
MAGNETIC RING
L2
L2
BN
BU
AC-L
N
E
YEGN
G
COM-INNER
BK
GY
WH
AP1: PRINTED CIRCUIT BOARD
T-SENSOR
4WAY
CN2
HEAT-B
OFAN
OVC-COMP
EXHAUST TEMP. SENSOR
OUTROOM TEMP. SENSOR
OUTTUBE TEMP. SENSOR
RT1 50K
RT2 15K
RT3 20K
4-WAY VALVE
4YV
VT
X1
L1
MAGNETIC RING
COMP
COMP.
U
V
W
BU
YE
RD
BOTTOM BAND HEATER
EH
OPTIONAL
FAN MOTOR
M1
OVERLOAD PROTECTOR
SAT
WH
OPTIONAL
ELECTRONIC EXPANSION VALVE A
ELECTRONIC EXPANSION VALVE B
ELECTRONIC EXPANSION VALVE C
EKV
FA
FB
FC
TUBE-A
TUBE-B
TUBE-C
RT4
RT5
RT6
RT7
RT8
RT9
QA Gas Valve Temp. Sensor
QB Gas Valve Temp. Sensor
QC Gas Valve Temp. Sensor
YA Liquid Valve Temp. Sensor
YB Liquid Valve Temp. Sensor
YC Liquid Valve Temp. Sensor
TERMINAL BLOCK
N(1)
2
3
XTA
XTB
XTC
WH(BU)
BK
RD(BN)
GN(YEGN)
INDOOR UNIT A
INDOOR UNIT B
INDOOR UNIT C
WARNING
Please don't touch any electronic component or terminal when the machine is running , stopping or has been powered off for less than 30 minutes to prevent the risk of electric shock!

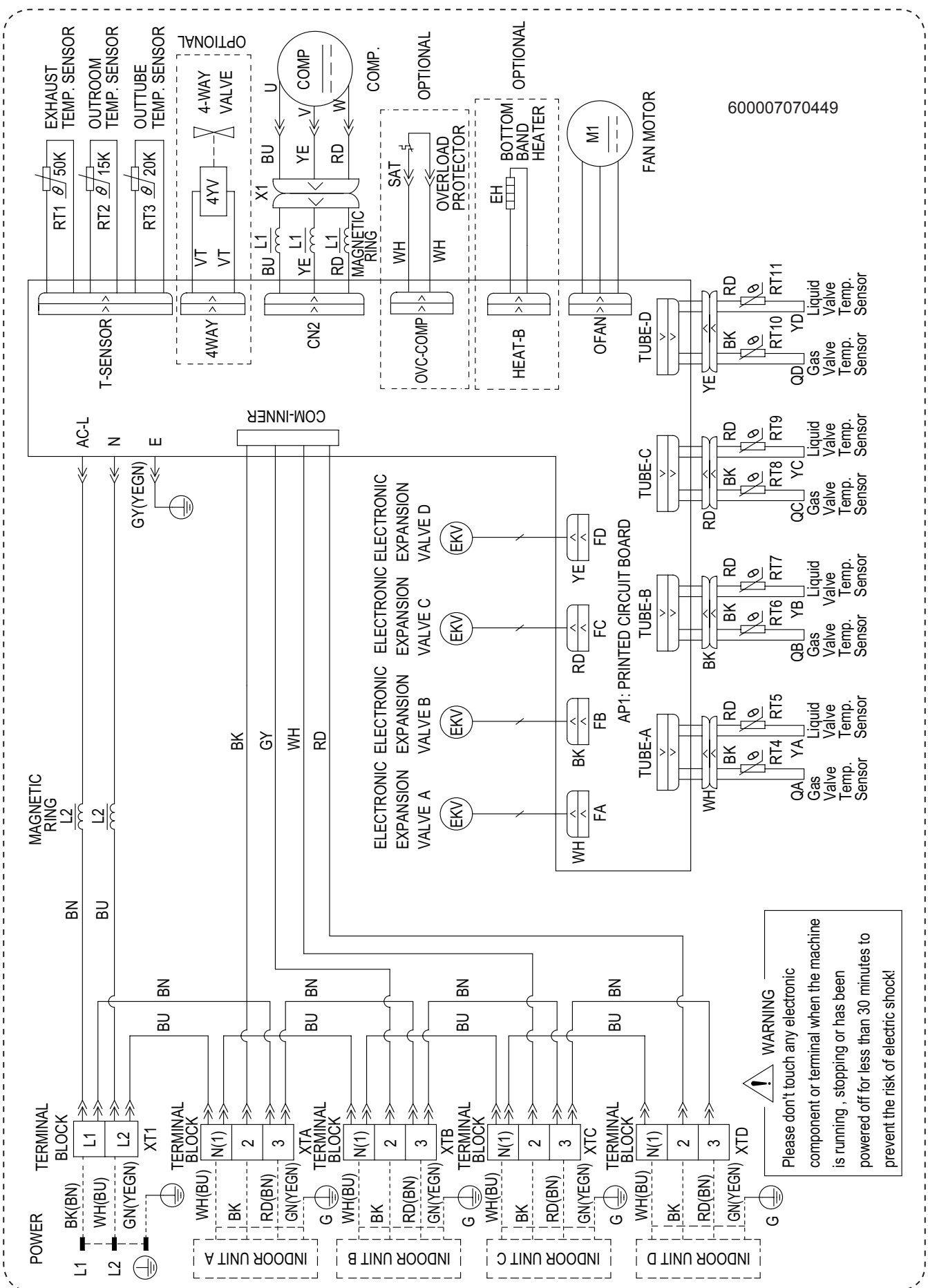
600007070449
POWER
L1
L2
BK(BN)
WH(BU)
GN(YEGN)
TERMINAL BLOCK
XT1
AC-L
N
E
GY(YEGN)
MAGNETIC RING
L2
BN
BU
COM-INNER
BK
GY
WH
RD
EXHAUST TEMP. SENSOR
OUTROOM TEMP. SENSOR
OUTTUBE TEMP. SENSOR
RT1 50K
RT2 15K
RT3 20K
T-SENSOR
OPTIONAL
4-WAY VALVE
4YV
VT
4WAY
COMP.
COMP
U
V
W
X1
L1
MAGNETIC RING
CN2
OPTIONAL
SAT
OVERLOAD PROTECTOR
WH
OVC-COMP
OPTIONAL
EH
BOTTOM BAND HEATER
HEAT-B
M1
FAN MOTOR
OFAN
ELECTRONIC EXPANSION VALVE A
ELECTRONIC EXPANSION VALVE B
ELECTRONIC EXPANSION VALVE C
ELECTRONIC EXPANSION VALVE D
EKV
FA
FB
FC
FD
AP1: PRINTED CIRCUIT BOARD
TUBE-A
TUBE-B
TUBE-C
TUBE-D
RT4
RT5
RT6
RT7
RT8
RT9
RT10
RT11
QA Gas Valve Temp. Sensor
QB Gas Valve Temp. Sensor
QC Gas Valve Temp. Sensor
QD Gas Valve Temp. Sensor
Liquid Valve Temp. Sensor
YA
YB
YC
YD
XTA
XTB
XTC
XTD
INDOOR UNIT A
INDOOR UNIT B
INDOOR UNIT C
INDOOR UNIT D
WARNING
Please don't touch any electronic component or terminal when the machine is running , stopping or has been powered off for less than 30 minutes to prevent the risk of electric shock!

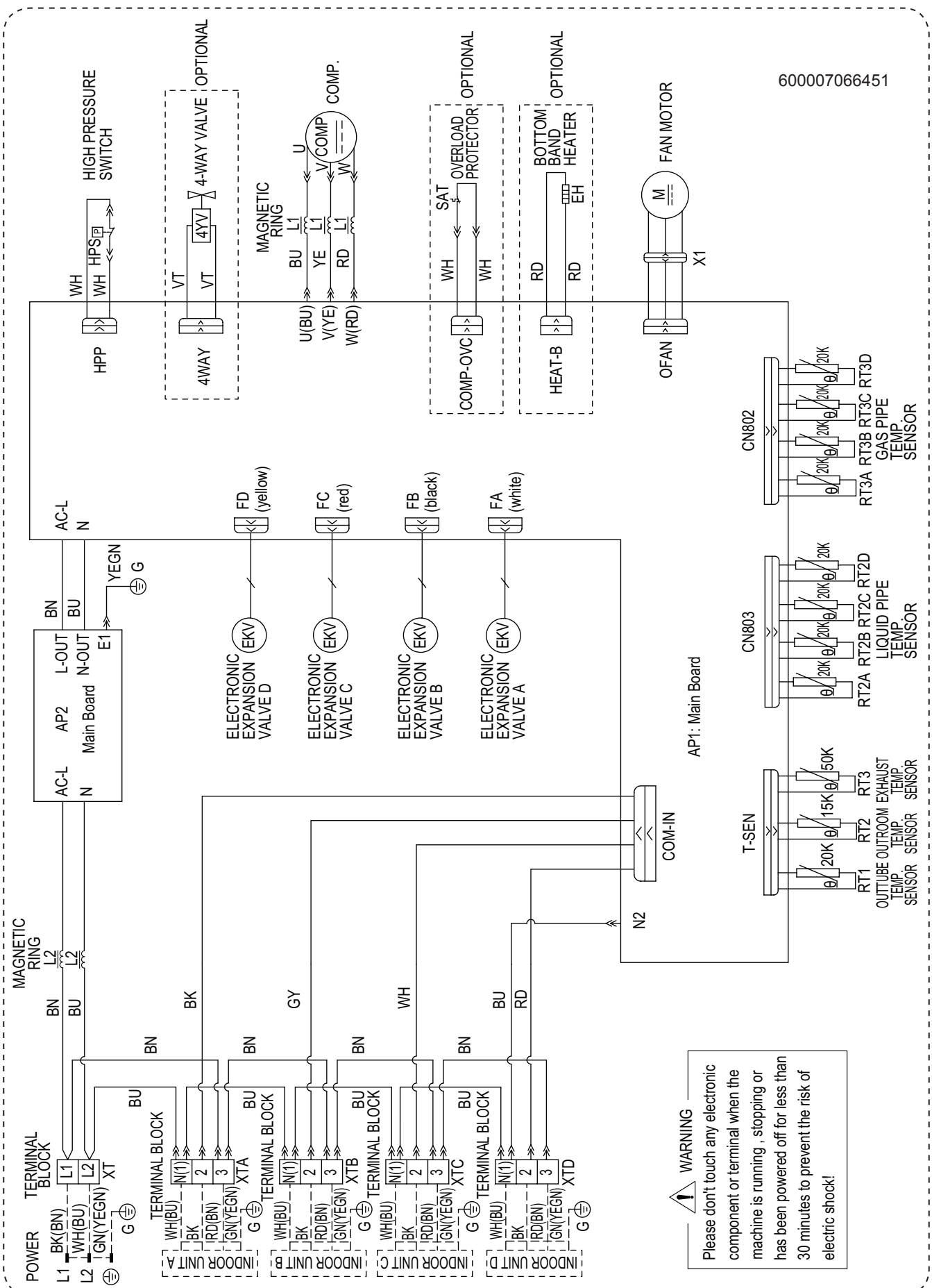
600007066451
POWER
TERMINAL BLOCK
L1
L2
BK(BN)
WH(BU)
GN(YEGN)
G
XT
MAGNETIC RING
L2
BN
BU
TERMINAL BLOCK
N(1)
2
3
XTA
XTB
XTC
XTD
INDOOR UNIT A
INDOOR UNIT B
INDOOR UNIT C
INDOOR UNIT D
WH(BU)
BK
RD(BN)
GN(YEGN)
BK
GY
WH
BU
RD
AC-L
N
AP2
L-OUT
N-OUT
E1
Main Board
YEGN
AP1: Main Board
COM-IN
N2
ELECTRONIC EXPANSION VALVE D
ELECTRONIC EXPANSION VALVE C
ELECTRONIC EXPANSION VALVE B
ELECTRONIC EXPANSION VALVE A
EKV
FD (yellow)
FC (red)
FB (black)
FA (white)
HPP
HPS
WH
HIGH PRESSURE SWITCH
4WAY
4YV
VT
4-WAY VALVE
OPTIONAL
MAGNETIC RING
L1
BU
YE
RD
U(BU)
V(YE)
W(RD)
COMP.
U
V
W
COMP-OVC
SAT
OVERLOAD PROTECTOR
OPTIONAL
HEAT-B
EH
BOTTOM BAND HEATER
OPTIONAL
OFAN
M
FAN MOTOR
X1
T-SEN
RT1
RT2
RT3
20K
15K
50K
OUTTUBE TEMP. SENSOR
OUTROOM TEMP. SENSOR
EXHAUST TEMP. SENSOR
CN803
RT2A
RT2B
RT2C
RT2D
LIQUID PIPE TEMP. SENSOR
CN802
RT3A
RT3B
RT3C
RT3D
GAS PIPE TEMP. SENSOR
WARNING
Please don't touch any electronic component or terminal when the machine is running , stopping or has been powered off for less than 30 minutes to prevent the risk of electric shock!

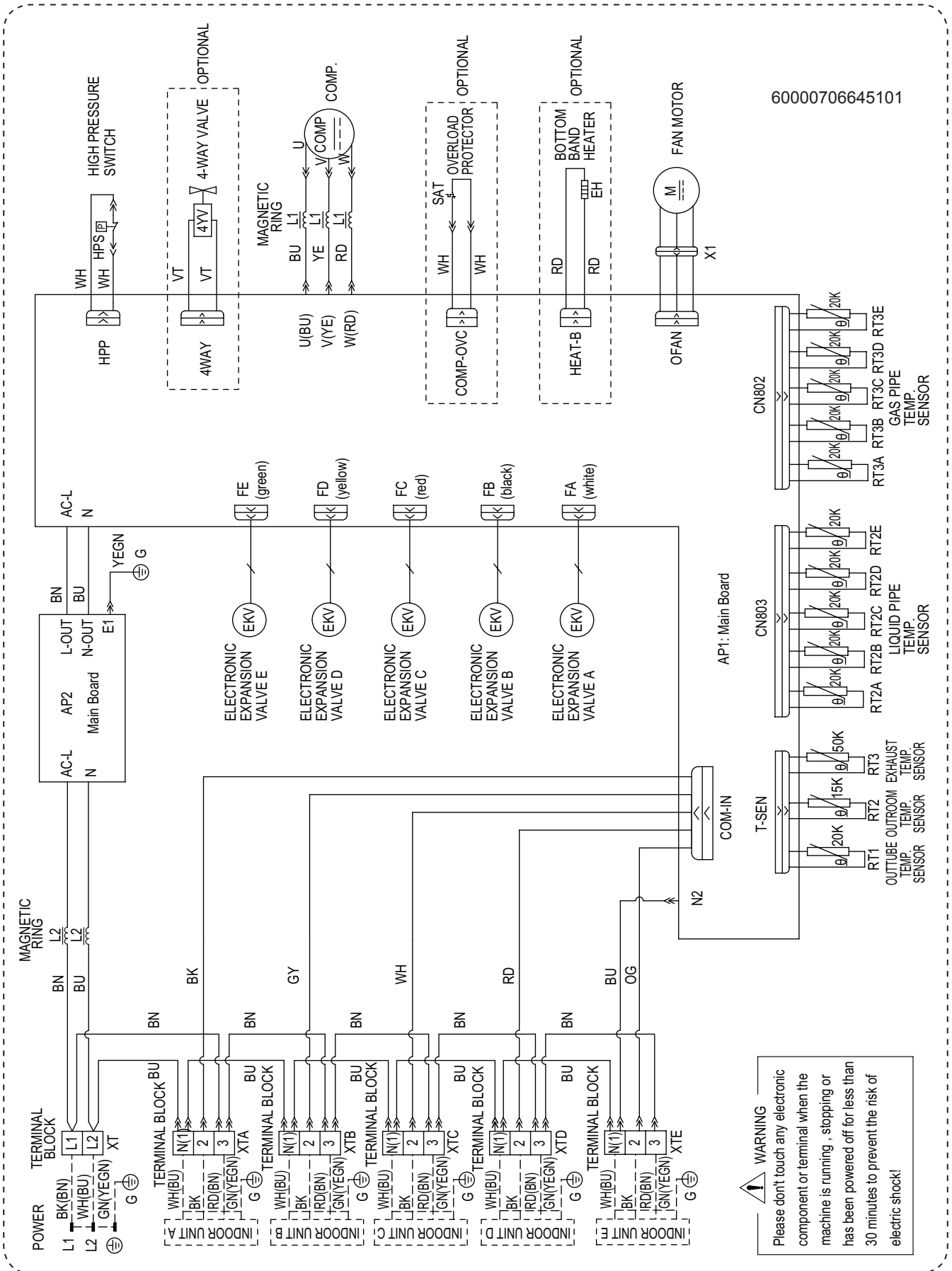

These wiring diagrams are subject to change without notice; please refer to the one supplied with the unit.

5.2 PCB Printed Diagram

EMUL18HPJ132OA

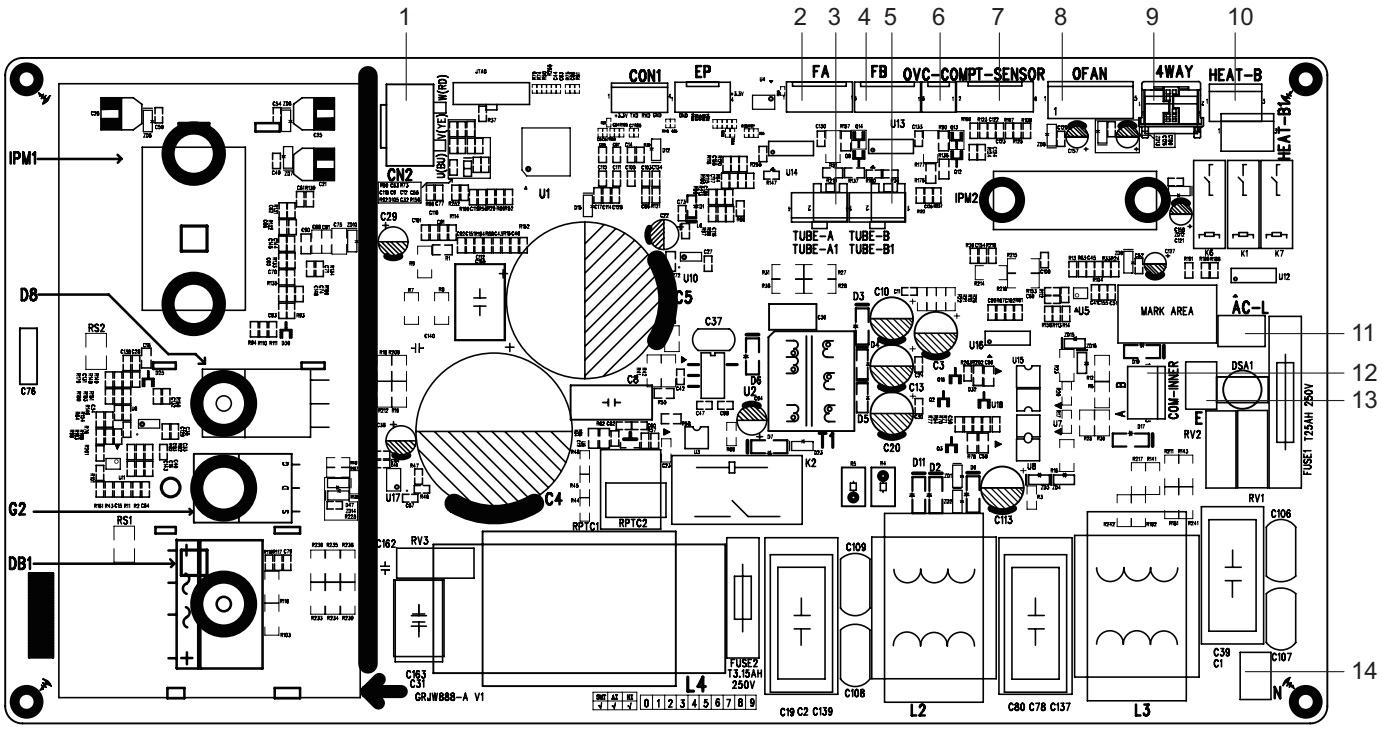

No.	Name
1	Terminal of compressor
2	Terminal of electronic expansion valve A
3	Terminal of gas-liquid valve temperature Sensor A
4	Terminal of electronic expansion valve B
5	Terminal of gas-liquid valve temperature Sensor B
6	Overload protection terminal of compressor
7	Terminal of temperature Sensor

No.	Name
8	Terminal of outdoor fan
9	Terminal of 4-way valve
10	Electric heating terminal of chassis
11	Terminal of live wire
12	Terminal of communication wire
13	Terminal of grounding wire
14	Terminal of neutral wire

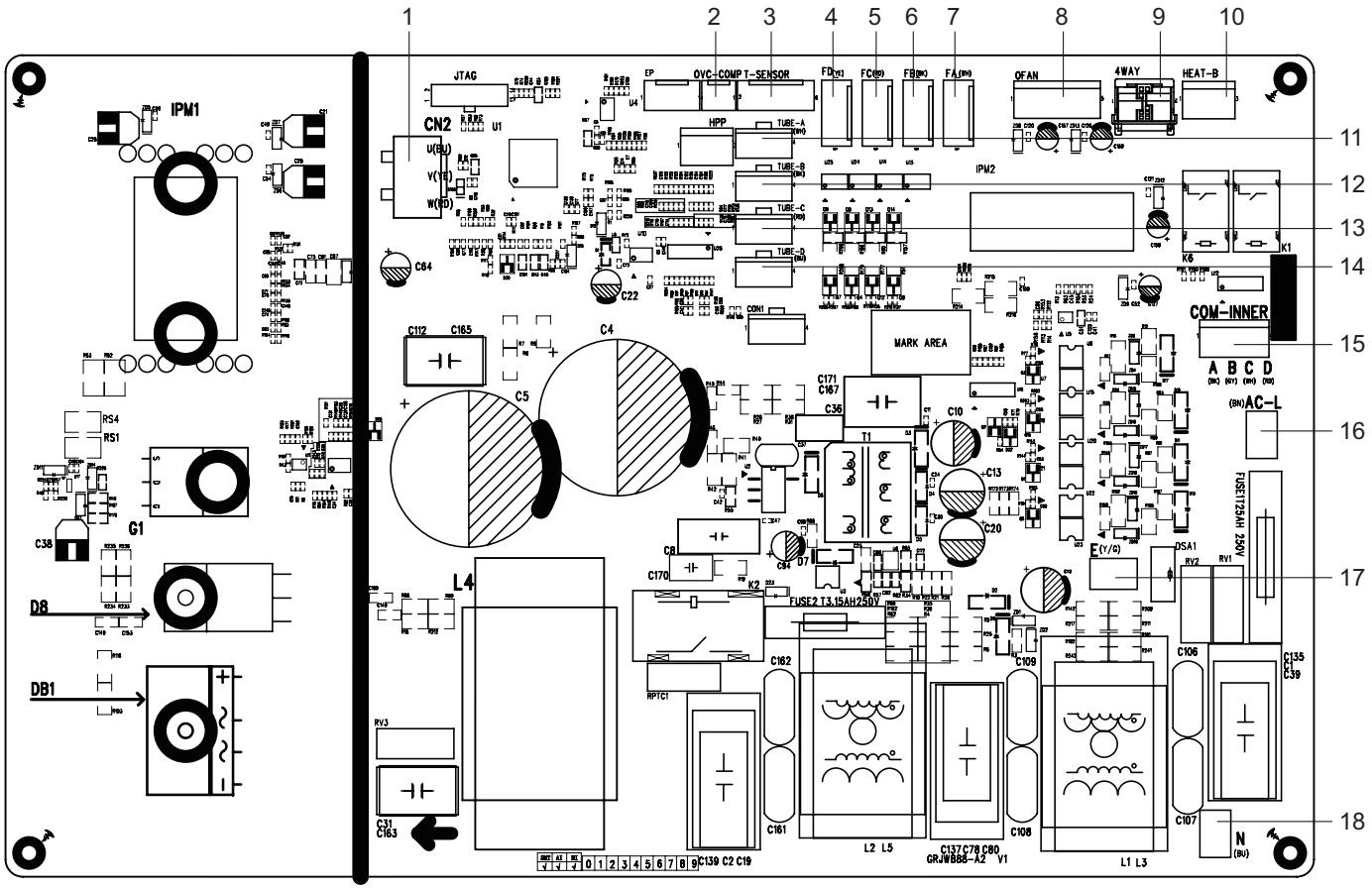

No.	Name	No.	Name
1	Terminal of compressor	10	Electric heating terminal of chassis
2	Overload protection terminal of compressor	11	Terminal of gas-liquid valve temperature Sensor A
3	Terminal of temperature sensor	12	Terminal of gas-liquid valve temperature Sensor B
4	Terminal of electronic expansion valve D	13	Terminal of gas-liquid valve temperature Sensor C
5	Terminal of electronic expansion valve C	14	Terminal of gas-liquid valve temperature Sensor D
6	Terminal of electronic expansion valve B	15	Terminal of communication wire
7	Terminal of electronic expansion valve A	16	Terminal of live wire
8	Terminal of outdoor fan	17	Terminal of grounding wire
9	Terminal of 4-way valve	18	Terminal of neutral wire

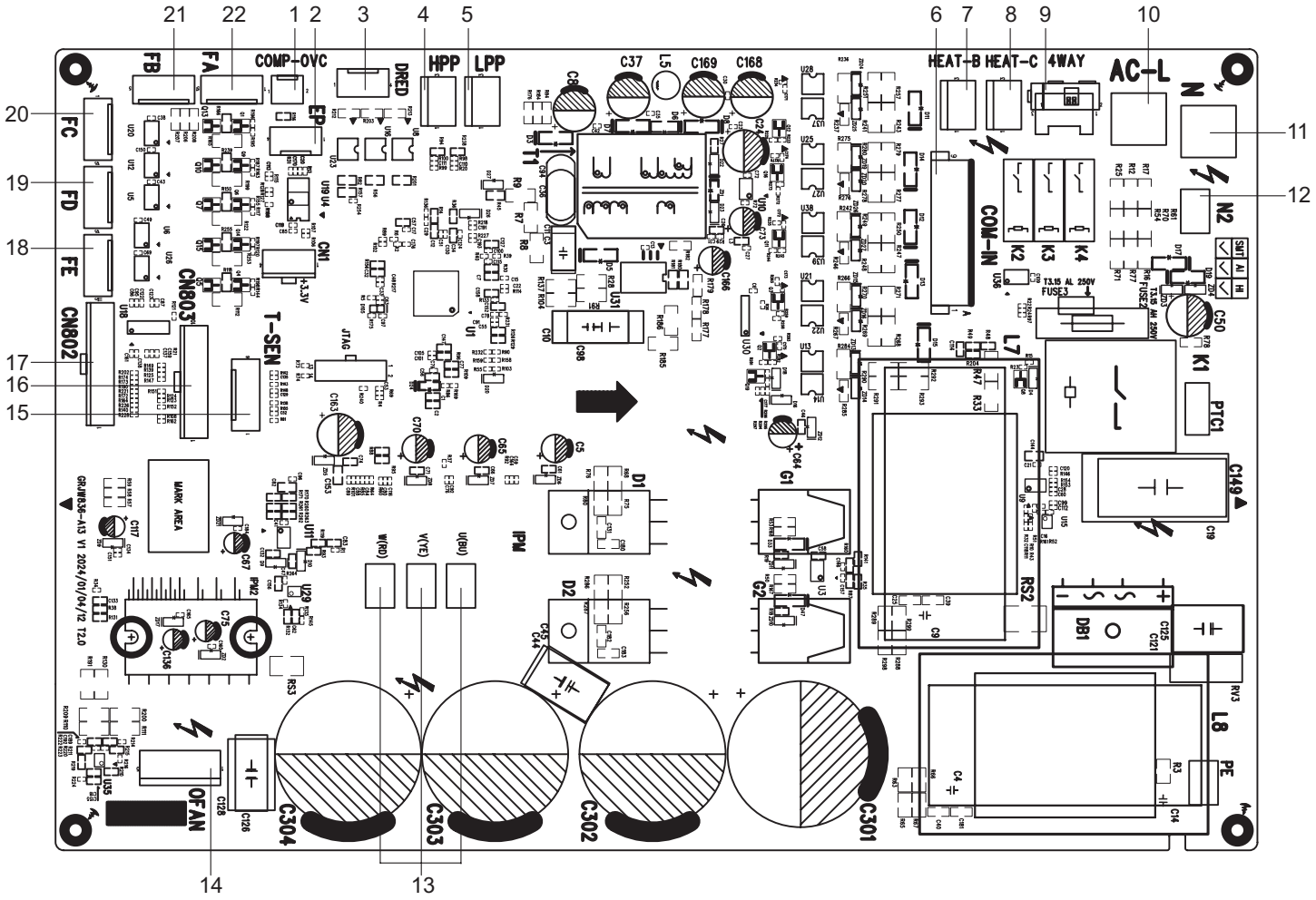

No.	Name	No.	Name
1	Overload protection terminal of compressor	12	Terminal of communication neutral wire
2	Terminal of E disk	13	Terminal of compressor
3	Terminal of DRED	14	Terminal of outdoor fan
4	Terminal of high pressure protection	15	Terminal of temperature Sensor
5	Terminal of low pressure protection	16	Terminal of liquid valve temperature Sensor
6	Terminal of communication wire	17	Terminal of gas valve temperature Sensor
7	Electric heating terminal of chassis	18	Terminal of electronic expansion valve E
8	Electric heating terminal of compressor	19	Terminal of electronic expansion valve D
9	Terminal of 4-way valve	20	Terminal of electronic expansion valve C
10	Terminal of live wire	21	Terminal of electronic expansion valve B
11	Terminal of neutral wire	22	Terminal of electronic expansion valve A

6. Function and Control

1 Basic functions of the system

1.1 Cooling Mode

1.1.1 Cooling conditions and process:

If the compressor is in stop status and start the unit for cooling operation, when one of the indoor units reaches the cooling operation condition, the unit start cooling operation; in this case, the electronic expansion valve, the outdoor fan and the compressor start operation.

1.1.2 Stop in cooling operation

1.1.2.1 Compressor stops

The compressor stops immediately, the outdoor fan stops after 1min.

1.1.2.2 Some of the indoor units reach the stop condition (the compressor does not stop) The compressor operates immediately according to the required frequency. For the indoor unit with no requirement, the corresponding electronic expansion valve is closed to 0P.

1.1.3 Cooling mode transfers to heating mode

When the unit transfers to heating mode, the 4-way valve is energized after the compressor stops for 2min. The other disposals are the same as stopping in cooling mode.

1.1.4 4-way valve: in this mode, the 4-way valve is closed.

1.1.5 Outdoor fan control in cooling mode

The outdoor fan starts before 5s of the starting of compressor. The outdoor fan will run in high speed for 3min after starting and then it will run in set speed. The fan shall run at every speed for at least 80s. (When the quantity of running indoor unit is changed, the unit will enter the control described in 1.3.5.1 and 1.3.5.2);

When the compressor stops, the outdoor fan runs at present speed and stops after 1min.

1.2 Dry Mode

1.2.1 The dry conditions and process are the same as those in cooling mode;

1.2.2 The status of 4-way valve: closed;

1.2.3 The temperature setting range: 16 ~ 30°C;

1.2.4 Protection function: the same as those in cooling mode;

1.2.5 In dry mode, the maximum value A of the capacity requirement percentage o f single unit is 90% of that in cooling mode.

The open condition of the electronic expansion valve, outdoor fan and compressor is the same as those in cooling mode.

1.3 Heating Mode(Only for heat pump models)

1.3.1 Heating conditions and process:

When one of the indoor units reaches the heating operation condition, the unit starts heating operation.

1.3.2 Stop in heating operation:

1.3.2.1 When all the indoor units reach the stop condition, the compressor stops and the outdoor fan stops after 1min;

1.3.2.2 Some of the indoor units reach the stop condition

The compressor reduces the frequency immediately and operates according to the required frequency;

1.3.2.3 Heating mode transfers to cooling mode(dry mode), fan mode

a. The compressor stops; b. the power of 4-way valve is cut off after 2min; c. the outdoor fan stops after 1min; d. the status of 4-way valve: energized;

1.3.3 Outdoor fan control in heating mode

The outdoor fan starts before 5s of the starting of compressor and then it will run in high speed for 40s;

The fan shall run at every speed for at least 80s;

When the compressor stops, the outdoor fan stops after 1min.

1.3.4 Defrosting function

When the defrosting condition is met, the compressor stops; the electronic expansion valve of all indoor units open in big angle; the outdoor fan stops after 40s of the stop of compressor, meanwhile, the 4-way valve reverses the direction; after the 4-way valve reverses the direction, the compressor starts; then begin to calculate the time of defrosting, the frequency of the compressor rises to reach the defrosting frequency.

1.3.5 Oil-returned control in heating mode

1.3.5.1 Oil-returned condition

The whole unit is operating in low frequency for a long time.

1.3.5.2 Oil-returned process in heating mode

The indoor unit displays “H1”

1.3.5.3 Oil-returned finished condition in heating mode.

The duration reaches 5min

1.4 Fan Mode

The compressor, the outdoor fan and the 4-way valve are closed; temperature setting range is 16~30°C.

2. Protection Function

2.1 Mode Conflict Protection of indoor unit

When the setting mode is different of different indoor unit, the unit runs in below status:

a. The mode of the first operating indoor unit is the basic mode, then compare the mode of the other indoor units to see if there is a conflict. Cooling mode (dry mode) is in conflict with heating mode.

b. Fan mode is in conflict with heating mode and the heating mode is the basic mode. No matter which indoor unit operates first, the unit will run in heating mode.

2.2 Overload protection function

When the tube temperature is a little low, the compressor raises the operation frequency; when the tube temperature is a little high, the compressor frequency is restricted or lows down the operation frequency; when the tube temperature is too high, the compressor protection stops running.

If the discharge temperature protection continuously appears for 6 times, the compressor can’t resume running. The compressor can resume running after cutting off the power and then putting through the power. (if the running time of the compressor is longer than 7min, the protection times record will be cleared)

2.3 Discharge Protection Function

When the discharge temperature is a little low, the compressor raises the operation frequency; when the discharge temperature is a little high, the compressor frequency is restricted or lows down the operation frequency; when the discharge temperature is too high, the compressor protection stops running.

If the discharge temperature protection continuously appears for

6 times, the compressor can't resume running. The compressor can resume running after cutting off the power and then putting through the power. (if the running time of the compressor is longer than 7min, the protection times record will be cleared)

2.4 Communication malfunction

Detection of the quantity of installed indoor units:

After 3min of energizing, if the outdoor unit does not receive the communication data of certain indoor unit, the outdoor unit will judge that indoor unit is not installed and will treat it as it is not installed. If the outdoor unit receives the communication data of that indoor unit later, the outdoor unit will treat that unit as it is installed.

2.5 Overcurrent Protection

a. Overcurrent protection of complete unit; b. phase wire current protection; c. compressor phase current protection

2.6 Compressor high-pressure protection

2.6.1 When the high-pressure switch is detected cut off for 3s continuously, the compressor will enter high-pressure protection as it stops when reaching set temperature. Meanwhile, the outdoor unit will send the signal of "high-pressure protection" to the indoor units;

2.6.2 After the appearance of high-pressure protection, when the high-pressure switch is detected closed for 6s continuously, the compressor can resume running only after cutting off the power and then putting through the power.

2.7 Compressor overload protection

If the compressor overload switch is detected having movement, the indoor unit will display the corresponding malfunction as it stops when the indoor temperature reaching set temperature. When the compressor stops for more than 3min and the compressor overload switch is reset, the unit will resume operation status automatically. If the protection appears for more than 6 times (if the running time of the compressor is longer than 30min, the protection times record will be cleared), the unit can not resume operation status automatically, but can resume running only after cutting off the power and then putting through the power.

2.8 Compressor Phase-lacking Protection

When the compressor starts, if one of the three phases is detected open, the compressor will enter phase-lacking protection.

The malfunction will be cleared after 1min, the unit will restart and then detect if there is still has phase-lacking protection. If the phase-lacking protection is detected for 6 times continuously, the compressor will not restart but can resume running only after cutting off the power and then putting through the power. If the running time of the compressor is longer than 7min, the protection times record will be cleared.

2.9 IPM Protection

2.9.1 When the IPM module protection is detected, the unit will stop as the indoor temperature reaching set temperature, PFC is closed, display IPM protection malfunction. After the compressor stops for 3min, the unit will resume operation status automatically; if the IPM protection is detected for more than 6 times continuously (If the running time of the compressor is longer than 7min, the protection times record will be cleared), the system will stop and send the signal of module protection to indoor unit. The unit can not resume operation status automatically, but can resume running only after cutting off the power and then putting through the power.

2.9.2 IPM module overheating protection

2.9.2.1 When $T_{IPM} > 85^{O}C$, prohibit to raise frequency;

2.9.2.2 When $T_{IPM} \geq 90^{O}C$, the operation frequency of compressor lows down by 15% every 90s according to the present capacity requirement of the complete unit. It will keep 90s after lowing down the frequency. After lowing down the frequency, if $T_{IPM} \geq 90^{O}C$, the unit will circulate the above movement until reaching the minimum frequency; if $85^{O}C < T_{IPM} < 90^{O}C$, the unit will run at this frequency; when $T_{IPM} \leq 85^{O}C$, the unit will run at the frequency according to the capacity requirement;

2.9.2.3 When $T_{IPM} \geq 95^{O}C$, the compressor stops. After the compressor stops for 3min, if $T_{IPM} < 85^{O}C$, the compressor and the outdoor fan will resume operation.

7. Notes for Installation and Maintenance

Safety Precautions: Important!

Please read the safety precautions carefully before installation and maintenance.

The following contents are very important for installation and maintenance.

WARNING: Installation Must be Performed in Accordance with the NEC/CEC by Authorized Personnel Only.

Please follow the instructions below.

●The installation or maintenance must accord with the instructions.

●Comply with all national electrical codes and local electrical codes.

●Pay attention to the warnings and cautions in this manual.

●All installation and maintenance shall be performed by distributor or qualified person.

●All electric work must be performed by a licensed technician according to local regulations and the instructions given in this manual.

●Be caution during installation and maintenance. Prohibit incorrect operation to prevent electric shock, casualty and other accidents.

⚠ WARNINGS

Electrical Safety Precautions:

1. Cut off the power supply of air conditioner before checking and maintenance.

2. The air condition must apply specialized circuit and prohibit share the same circuit with other appliances.

3. The air conditioner should be installed in suitable location and ensure the power plug is touchable.

4. Make sure each wiring terminal is connected firmly during installation and maintenance.

5. Have the unit adequately grounded. The grounding wire can't be used for other purposes.

6. Must apply protective accessories such as protective boards, cable-cross loop and wire clip.

7. The live wire, neutral wire and grounding wire of power supply must be corresponding to the live wire, neutral wire and grounding wire of the air conditioner.

8. The power supply cord and power connection wires can't be pressed by hard objects.

9. If power supply cord or connection wire is broken, it must be replaced by a qualified person.

10. If the power supply cord or connection wire is not long enough, please get the specialized power supply cord or connection wire from the manufacture or distributor. Prohibit prolong the wire by yourself.

11. For the air conditioner without plug, an air switch must be installed in the circuit. The air switch should be all-pole parting and the contact parting distance should be more than 3mm.

12. Make sure all wires and pipes are connected properly and the valves are opened before energizing.

13. Check if there is electric leakage on the unit body. If yes, please eliminate the electric leakage.

14. Replace the fuse with a new one of the same specification if it is burnt down; dont replace it with a cooper wire or conducting wire.

15. If the unit is to be installed in a humid place, the circuit breaker must be installed.

Installation Safety Precautions:

1. Select the installation location according to the requirement of this manual.(See the requirements in installation part)

2. Handle unit transportation with care; the unit should not be carried by only one person if it is more than 20kg.

3. When installing the indoor unit and outdoor unit, a sufficient fixing bolt must be installed; make sure the installation support is firm.

4. Ware safety belt if the height of working is above 2m.

5. Use equipped components or appointed components during installation.

6. Make sure no foreign objects are left in the unit after finishing installation.

Refrigerant Safety Precautions:

1. When refrigerant leaks or requires discharge during installation, maintenance, or disassembly, it should be handled by certified professionals or otherwise in compliance with local laws and regulations.

2.Avoid contact between refrigerant and fire as it generates poisonous gas; Prohibit prolong the connection pipe by welding.

3. Apply specified refrigerant only. Never have it mixed with any other refrigerant. Never have air remain in the refrigerant line as it may lead to rupture or other hazards.

4. Make sure no refrigerant gas is leaking out when installation is completed.

5. If there is refrigerant leakage, please take sufficient measure to minimize the density of refrigerant.

6. Never touch the refrigerant piping or compressor without wearing glove to avoid scald or frostbite.

Improper installation may lead to fire hazard, explosion, electric shock or injury.

Safety Precautions for Installing and Relocating the Unit:

To ensure safety, please be mindful of the following precautions.

⚠ WARNINGS

1. When installing or relocating the unit, be sure to keep the refrigerant circuit free from air or substances other than the specified refrigerant.

Any presence of air or other foreign substance in the refrigerant circuit will cause system pressure rise or compressor rupture, resulting in injury.

2.When installing or moving this unit, do not charge the refrigerant which is not comply with that on the nameplate or unqualified refrigerant.

Otherwise, it may cause abnormal operation, wrong action, mechanical malfunction or even series safety accident.

3.When refrigerant needs to be recovered during relocating or repairing the unit, be sure that the unit is running in cooling mode.Then, fully close the valve at high pressure side (liquid valve).About 30-40 seconds later, fully close the valve at low pressure side (gas valve), immediately stop the unit and disconnect power. Please note that the time for refrigerant recovery should not exceed 1 minute.

If refrigerant recovery takes too much time, air may be sucked in and cause pressure rise or compressor rupture, resulting in injury.

4.During refrigerant recovery, make sure that liquid valve and gas valve are fully closed and power is disconnected before detaching the connection pipe.

If compressor starts running when stop valve is open and connection pipe is not yet connected, air will be sucked in and cause pressure rise or compressor rupture, resulting in injury.

5.When installing the unit, make sure that connection pipe is securely connected before the compressor starts running.

If compressor starts running when stop valve is open and connection pipe is not yet connected, air will be sucked in and cause pressure rise or compressor rupture, resulting in injury.

6.Prohibit installing the unit at the place where there may be leaked corrosive gas or flammable gas.

If there leaked gas around the unit, it may cause explosion and other accidents.

7.Do not use extension cords for electrical connections. If the electric wire is not long enough, please contact a local service center authorized and ask for a proper electric wire.

Poor connections may lead to electric shock or fire.

8.Use the specified types of wires for electrical connections between the indoor and outdoor units. Firmly clamp the wires so that their terminals receive no external stresses.

Electric wires with insufficient capacity, wrong wire connections and insecure wire terminals may cause electric shock or fire.



R32 refrigerant warning

• To realize the function of the air conditioner unit, a special refrigerant circulates in the system. The used refrigerant is the fluoride R32, which is specially cleaned. The refrigerant is flammable and inodorous. Furthermore, it can lead to explosion under certain conditions. But the flammability of the refrigerant is very low. It can be ignited only by fire.

• Compared to common refrigerants, R32 is a nonpolluting refrigerant with no harm to the ozonosphere. The influence upon the greenhouse effect is also lower. R32 has got very good thermodynamic features which lead to a really high energy efficiency. The units there fore need a less filling.

• This product uses R32 difluoromethane refrigerant, which is a mildly flammable gas class A2L according to ISO 817 or ANSI/ASHRAE 34.

• "ANSI/ASHRAE 15 (USA) and CSA 852 (Canada)" stipulate that it must be handled by a refrigeration mechanic with an appropriate refrigerant handling licence.

•The appliance shall be stored in a room without continuously operating ignition sources.(for example:open flames,an operating gas appliance or an operating electric heater.)

•The appliance shall be stored in a well-ventilated area where the room size corresponds to the room area as specified for operation.

•The appliance shall be stored so as to prevent mechanical damage from occurring.

•Ducts connected to an appliance shall not contain an ignition source.

•Keep any required ventilation openings clear of obstruction.

•Do not pierce or burn.

•Be aware that refrigerants may not contain an odour.

•Do not use means to accelerate the defrosting process or to clean,other than those recommended by the manufacturer.

•Servicing shall be performed only as recommended by the manufacturer.

•Should repair be necessary,contact your nearest authorized

•Service Centre. Any repairs carried out by unqualified personnel may be dangerous.

•Compliance with national gas regulations shall be observed.

Read specialist's manual.



•That pipe-work including piping material, pipe routing, and installation shall include protection from physical damage in operation and service, and be in compliance with national and local codes and standards, such as ASHRAE 15,ASHRAE15.2,IAPMO Uniform Mechanical Code,ICC International Mechanical Code,or CSA B52.All field joints shall be accessible for inspection prior to being covered or enclosed.

Safety Operation of Flammable Refrigerant

Aptitude requirement for maintenance man(repairs should be done only be specialists).

•Any person who is involved with working on or breaking into a refrigerant circuit should hold a current valid certificate from an industry-accredited assessment authority,which authorises their competence to handle refrigerants safely in accordance with an industry recognised assessment specification.

•Servicing shall only be performed as recommended by the equipment manufacturer. Maintenance and repair requiring the assistance of other skilled personnel shall be carried out under the supervision of the person competent in the use of flammable refrigerants

Safety preparation work

This product uses mildly flammable R32 refrigerant. Certain levels of refrigerant require minimum room sizes. Please ensure that these minimum room sizes are adhered to for standard installations.(Note: Please refer to the nameplate for the charging quantity of R32).

Appliance shall be installed, operated and stored in a room with a floor area larger than Xm^2 . (Please refer to table "a")

table a - Minimum room area (m^2)

Charge amount (kg)	Installation height(m)			
	1.8	2.2	2.5	3
	Minimum room area (m^2)			
≤1.836	/	/	/	
1.85	6.72	5.50	4.84	4.04
1.9	6.90	5.65	4.97	4.14
1.95	7.09	5.80	5.10	4.25
2	7.27	5.95	5.23	4.36
2.05	7.45	6.10	5.36	4.47
2.1	7.63	6.24	5.50	4.58
2.15	7.81	6.39	5.63	4.69
2.2	7.99	6.54	5.76	4.80
2.3	8.36	6.84	6.02	5.02
2.4	8.72	7.14	6.28	5.23
2.5	9.08	7.43	6.54	5.45
2.6	9.45	7.73	6.80	5.67
2.7	9.81	8.03	7.06	5.89
2.8	10.17	8.32	7.33	6.11
2.9	10.54	8.62	7.59	6.32
3	10.90	8.92	7.85	6.54
3.1	11.26	9.21	8.11	6.76
3.2	11.62	9.51	8.37	6.98
3.3	11.99	9.81	8.63	7.19
3.4	12.35	10.11	8.89	7.41
3.5	12.71	10.40	9.16	7.63

Information on servicing

Checks to the area

Prior to beginning work on systems containing FLAMMABLE REFRIGERANTS, Safety checks are necessary to ensure that the risk of ignition is minimised. For repair to the REFRIGERATING SYSTEM, the following precautions shall be completed prior to conducting work on the system.

Work procedure

Work shall be undertaken under a controlled procedure so as

to minimise the risk of a flammable gas or vapour being present while the work is being performed.

General work area

All maintenance staff and others working in the local area shall be instructed on the nature of work being carried out. Work in confined spaces shall be avoided.

Checking for presence of refrigerant

The area shall be checked with an appropriate refrigerant detector prior to and during work, to ensure the technician is aware of potentially toxic or flammable atmospheres. Ensure that the leak detection equipment being used is suitable for use with all applicable refrigerants, i.e. non-sparking, adequately sealed or intrinsically sate.

Presence of fire extinguisher

If any hot work is to be conducted on the refrigerating equipment or any associated parts,appropriate fire extinguishing equipment shall be available to hand. Have a dry powder or CO_2 fire extinguisher adjacent to the charging area.

No ignition sources

No person carrying out work in relation to a REFRIGERATING SYSTEM which involves exposing any pipe work shall use any sources of ignition in such a manner that it may lead to the risk of fire or explosion. All possible ignition sources, including cigarette smoking, should be kept sufficiently far away from the site of installation, repairing, removing and disposal, during which refrigerant can possibly be released to the surrounding space. Prior to work taking place, the area around the equipment is to be surveyed to make sure that there are no flammable hazards or ignition risks.“No Smoking” signs shall be displayed.

Ventilated area

Ensure that the area is in the open or that it is adequately ventilated before breaking into the system or conducting any hot work. A degree of ventilation shall continue during the period that the work is carried out. The ventilation should safely disperse any released refrigerant and preferably expel it externally into the atmosphere.

Checks to the refrigerating equipment

Where electrical components are being changed,they shall be fit for the purpose and to the correct specification. At all times the manufacturer's maintenance and service guidelines shall be followed. If in doubt, consult the manufacturer’s technical department for assistance.

The following checks Shall be applied to installations using FLAMMABLE REFRIGERANTS:

-the actual REFRIGERANT CHARGE is in accordance with the room size within which the refrigerant containing parts are installed.

-the ventilation machinery and outlets are operating adequately and are not obstructed;

-if an indirect refrigerating circuit is being used, the secondary circuit shall be checked for the presence of refrigerant;

-marking to the equipment continues to be visible and legible. Markings and signs that are illegible shall be corrected.

-refrigerating pipe or components are installed in a position where they are unlikely to be exposed to any substance which may corrode refrigerant containing components, unless the components are constructed of materials which are inherently resistant to being corroded or are Suitably protected against being so corroded.

Checks to electrical devices

Repair and maintenance to electrical components shall include initial safety checks and component inspection procedures. If a fault exists that could compromise safety,then no electrical supply shall be connected to the circuit until it is satisfactorily dealt with. If the fault cannot be corrected immediately but it is necessary to continue operation,an adequate temporary solution shall be used. This shall be reported to the owner of the equipment so all parties are advised.

Initial safety checks shall include:

•that capacitors are discharged: this shall be done in a safe manner to avoid possibility of sparking;

•that no live electrical components and wiring are exposed while charging, recovering or purging the system;

•that there is continuity of earth bonding.

Repairs to sealed components

Sealed electrical components shall be replaced.

Repair to intrinsically safe components

Intrinsically safe components must be replaced.

Cabling

Check that cabling will not be subject to wear,corrosion,excessive pressure,vibration,sharp edges or any other adverse environmental effects. The check shall also take into account the effects of aging or continual vibration from sources such as compressors or fans.

Detection of flammable refrigerants

Under no circumstances shall potential sources of ignition be used in the searching for or detection of refrigerant leaks. A halide torch(or any other detector using a naked flame) shall not be used.

The following leak detection methods are deemed acceptable for all refrigerant systems.

Electronic leak detectors may be used to detect refrigerant leaks but, in the case of FLAMMABLE REFRIGERANTS,the sensitivity may not be adequate,or may need re-calibration.(Detection equipment shall be calibrated in a refrigerant-free area.)Ensure that the detector is not a potential source of ignition and is suitable for the refrigerant used. Leak detection equipment shall be set at a percentage of the LFL of the refrigerant and shall be calibrated

to the refrigerant employed, and the appropriate percentage of gas (25%maximum) is confirmed.

Leak detection fluids are also suitable for use with most refrigerants but the use of detergents containing chlorine shall be avoided as the chlorine may react with the refrigerant and corrode the copper pipe-work.

NOTE Examples of leak detection fluids are

-bubble method,

-fluorescent method agents

If a leak is suspected,all naked flames shall be removed/ extinguished.

If a leakage of refrigerant is found which requires brazing, all of the refrigerant shall be recovered from the system,or isolated (by means of shut off valves) in a part of the system remote from the leak. Removal of refrigerant shall be according to Clause "Removal and evacuation".

Removal and evacuation

When breaking into the refrigerant circuit to make repairs -or for any other purpose -conventional procedures shall be used. However,for flammable refrigerants it is important that best practice be followed,since flammability is a consideration. The following procedure shall be adhered to:

-Safely remove refrigerant following local and national regulations;

-evacuate;

-purge the circuit with inert gas (optional for A2L);

-evacuate (optionalforA2L);

-continuously flush or purge with inert gas when using flame to open circuit;and

-open the circuit.

The refrigerant charge shall be recovered into the correct recovery cylinders if venting is not allowed by local and national codes. For appliances containing flammable refrigerants,the system shall be purged with oxygen-free nitrogen to render the appliance safe for flammable refrigerants. This process might need to be repeated several times. Compressed air or oxygen shall not be used for purging refrigerant systems.

For appliances containing flammable refrigerants,refrigerants purging shall be achieved by breaking the vacuum in the system with oxygen-free nitrogen and continuing to fill until the working pressure is achieved,then venting to atmosphere,and finally pulling down to a vacuum (optional for A2L).This process shall be repeated until no refrigerant is within the system (optional for A2L).

When the final oxygen-free nitrogen charge is used,the system shall be vented down to atmospheric pressure to enable work to take place.

The outlet for the vacuum pump shall not be close to any potential ignition sources,and ventilation shall be available

Charging procedures

In addition to conventional charging procedures,the following requirements shall be followed.

•Ensure that contamination of different refrigerants does not occur when using charging equipment.

Hoses or lines shall be as short as possible to minimise the amount of refrigerant contained in them.

•Cylinders shall be kept in an appropriate position according to the instructions.

•Ensure that the REFRIGERATING SYSTEM is earthed prior to charging the system with refrigerant.

•Label the system when charging is complete(if not already).

•Extreme care shall be taken not to overfill the REFRIGERATING SYSTEM.

Prior to recharging the system, it shall be pressure-tested with the appropriate purging gas. The system shall be leak-tested on completion of charging but prior to commissioning. A follow up leak test shall be carried out prior to leaving the site.

Decommissioning

Before carrying out this procedure,it is essential that the technician is completely familiar with the equipment and all its detail.It is recommended good practice that all refrigerants are recovered safely. Prior to the task being carried out,an oil and refrigerant sample shall be taken in case analysis is required prior to re-use of recovered refrigerant. It is essential that electrical power is available before the task is commenced.

a) Become familiar with the equipment and its operation.

b) Isolate system electrically

c) Before attempting the procedure,ensure that:

•mechanical handling equipment is available, if required,for handling refrigerant cylinders;

•all personal protective equipment isavailable and being used correctly;

•the recovery process is supervised at all times by a competent person;

•recovery equipment and cylinders conform to the appropriate standards.

d) Pump down refrigerant system,if possible

e) If a vacuum is not possible,make a manifold so that refrigerant can be removed from various parts of the system.

f) Make sure that cylinder is situated on the scales before recovery takes place

g) Start the recovery machine and operate in accordance with instructions

h) Do not overfill cylinders (no more than 80 % volume liquid charge.

i) Do not exceed the maximum working pressure of the cylinder even temporarily.

j) When the cylinders have been filled correctly and the process completed, make sure that the cylinders and the equipment are removed from site promptly and all isolation valves on the equipment are closed off.

k) Recovered refrigerant shall not be charged into another REFRIGERATING SYSTEM unless it has been cleaned and checked.

Labelling

Equipment shall be labelled stating that it has been de-commissioned and emptied of refrigerant. The label shall be dated and signed. For appliances containing FLAMMABLE REFRIGERANTS,ensure that there are labels on the equipment stating the equipment contains FLAMMABLE REFRIGERANT.

Recovery

When removing refrigerant from a system, either for servicing or decommissioning, it is recommended good practice that all refrigerants are removed safely.

When transferring refrigerant into cylinders,ensure that only appropriate refrigerant recovery cylinders are employed. Ensure that the correct number of cylinders for holding the total system charge is available. All cylinders to be used are designated for the recovered refrigerant and labelled for that refrigerant (i.e. special cylinders for the recovery of refrigerant). Cylinders shall be complete with pressure-relief valve and associated shut-off valves in good working order. Empty recovery cylinders are evacuated and,if possible cooled before recovery occurs.

The recovery equipment shall be in good working order with a set of instructions concerning the equipment that is at hand and shall be suitable for the recovery of the flammable refrigerant. If in doubt,the manufacturer should be consulted. In addition,a set of calibrated weighing scales shall be available and in good working order. Hoses shall be complete with leak-free disconnect couplings and in good condition.

The recovered refrigerant shall be processed according to local legislation in the correct recovery cylinder, and the relevant waste transfer note arranged. Do not mix refrigerants in recovery units and especially not in cylinders.

If compressors or compressor oils are to be removed, ensure that they have been evacuated to an acceptable level to make certain that flammable refrigerant does not remain within the lubricant. The compressor body shall not be heated by an open flame or other ignition sources to accelerate this process. When oil is drained from a system,it Shall be carried out safely.

Main Tools for Installation and Maintenance



Level meter



Measuring tape



Screw driver



Impact drill



Drill head



Electric drill



Electroprobe



Universal meter



Torque wrench



Open-end wrench



Inner hexagon spanner



Electronic leakage detector



Vacuum pump



Pressure meter



Pipe pliers



Pipe pliers



Pipe cutter



Pipe expander



Pipe bender



Soldering appliance



Refrigerant container



Electronic scale

8. Installation

Installation Procedures

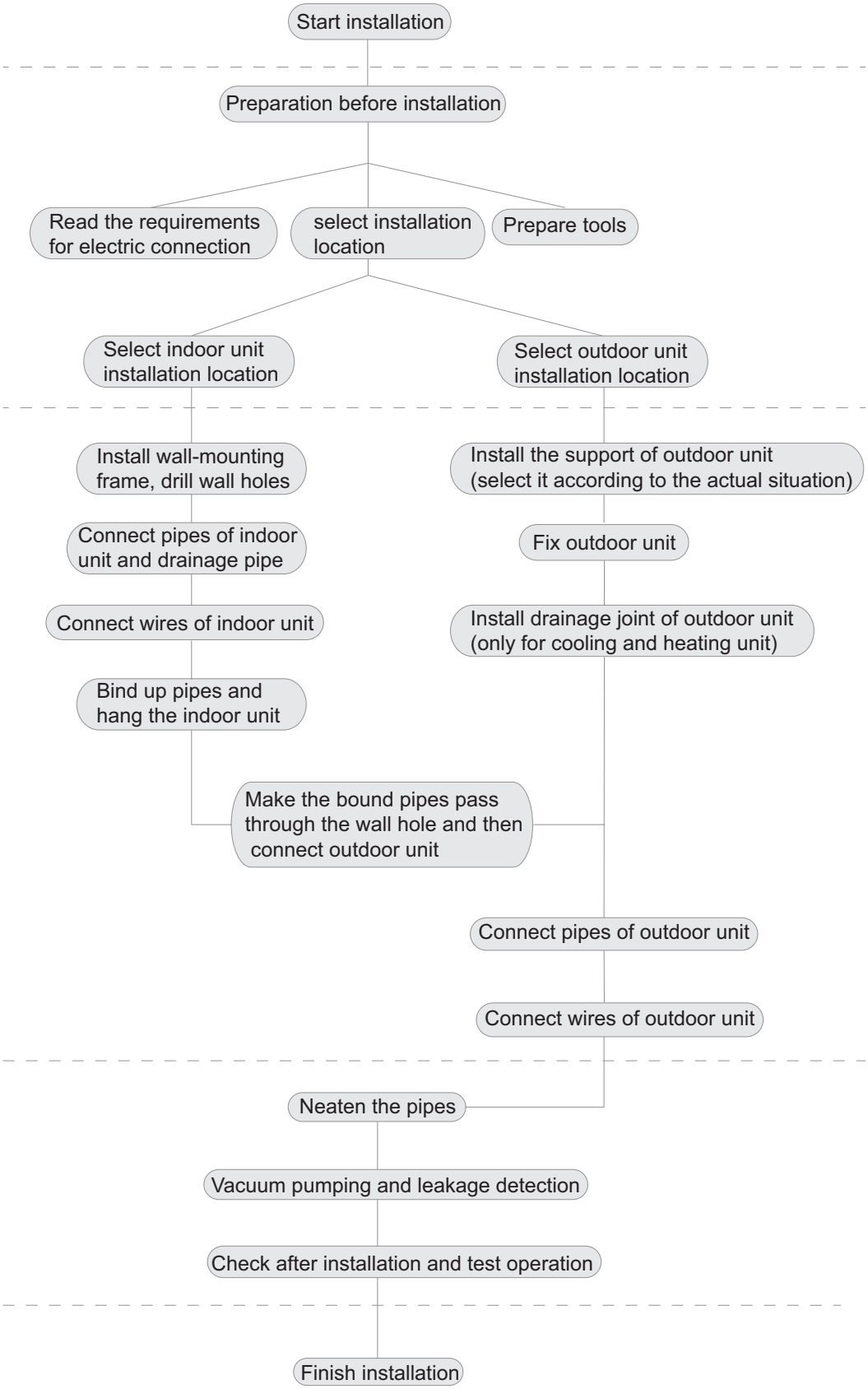

Note: this flow is only for reference; please find the more detailed installation steps in this section.

8.1 Electrical Connections

1. Remove the handle at the right side plate of the outdoor unit (one screw).
2. Remove the cable clamp, connect the power connection cable with the terminal at the row of connection and fix the connection. The fitting line distributing must be consistent with the indoor unit. terminal of line bank. Wiring should meet that of indoor unit.
3. Fix power connection wire by wire clamp.
4. Ensure wire has been fixed well.
5. Install the handle.

⚠ Including an air switch with suitable capacity,please note the following table. Air switch should be included magnet buckle and heating buckle function, it can protect the circuit-short and overload. (Caution: please do not use the fuse only for protect the circuit)

⚠ An all-pole disconnection switch having a contact separation of at least 3mm in all pole should be connected in fixed wiring.

⚠ Wrong wire connection may cause malfunction of some electric components.After fixing cable, ensure that leads between connection to fixed point have some space.

⚠ For EMUL18HPJ132OA:
The connection pipes and the connection wirings of the unit A, and unit B must be corresponding to each other respective.

⚠ For EMUL24HPJ132OA:
The connection pipes and the connection wirings of the unit A, unit B and unit C must be corresponding to each other respective.

⚠ For 30/36K:
The connection pipes and the connection wirings of the unit A, unit B, unit C and unit D must be corresponding to each other respective.

⚠ For 42/48K:
The connection pipes and the connection wirings of the unit A, unit B, unit C, unit D and unit E must be corresponding to each other respective.

⚠ The appliance shall be installed in accordance with national wiring regulations.

Note: the above figures are only intended to be a simple diagram of the appliance and may not correspond to the appearance of the units that have been purchased.

EMUL18HPJ132OA

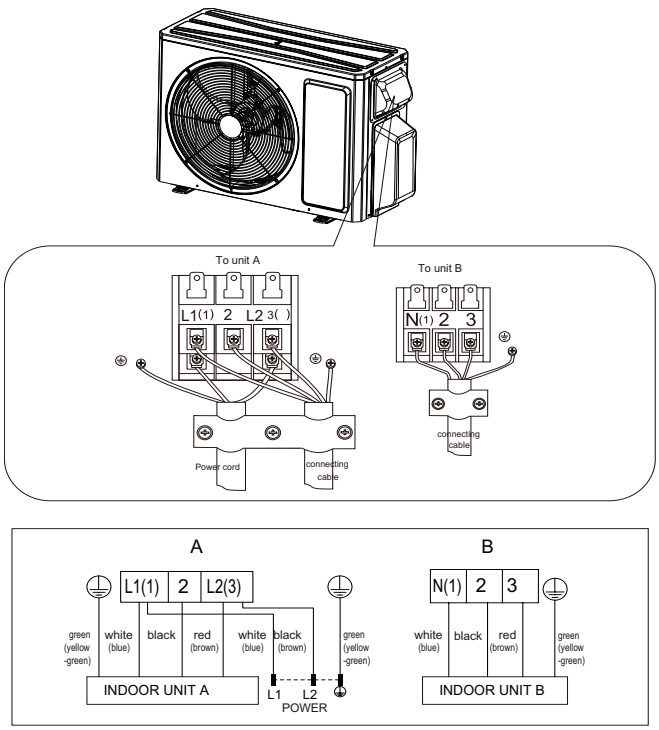

24K:

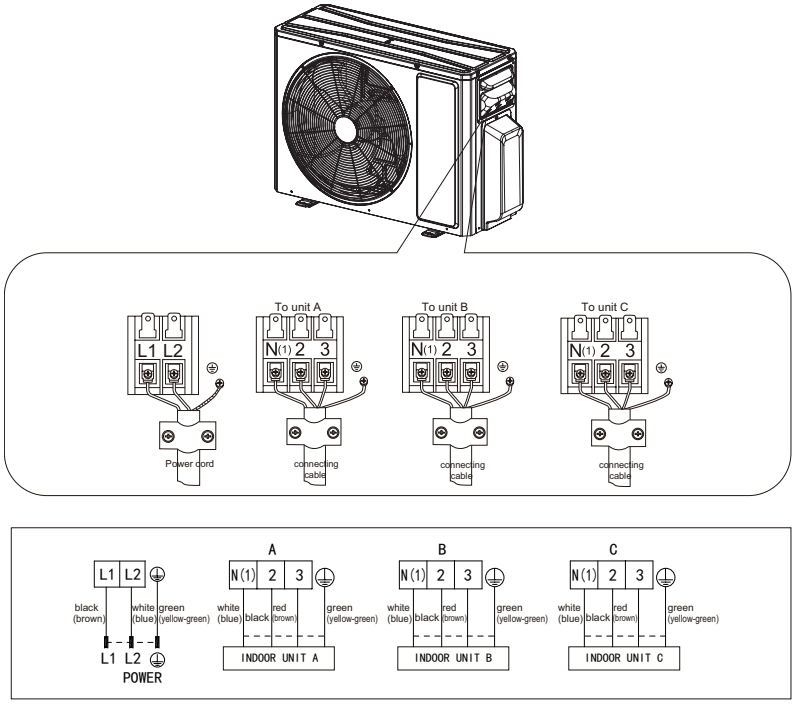
To unit A
To unit B
To unit C
L1 L2
N(1) 2 3
Power cord
connecting cable
A
B
C
black (brown)
white (blue)
green (yellow-green)
red (brown)
L1 L2
POWER
INDOOR UNIT A
INDOOR UNIT B
INDOOR UNIT C

30K / 36K:

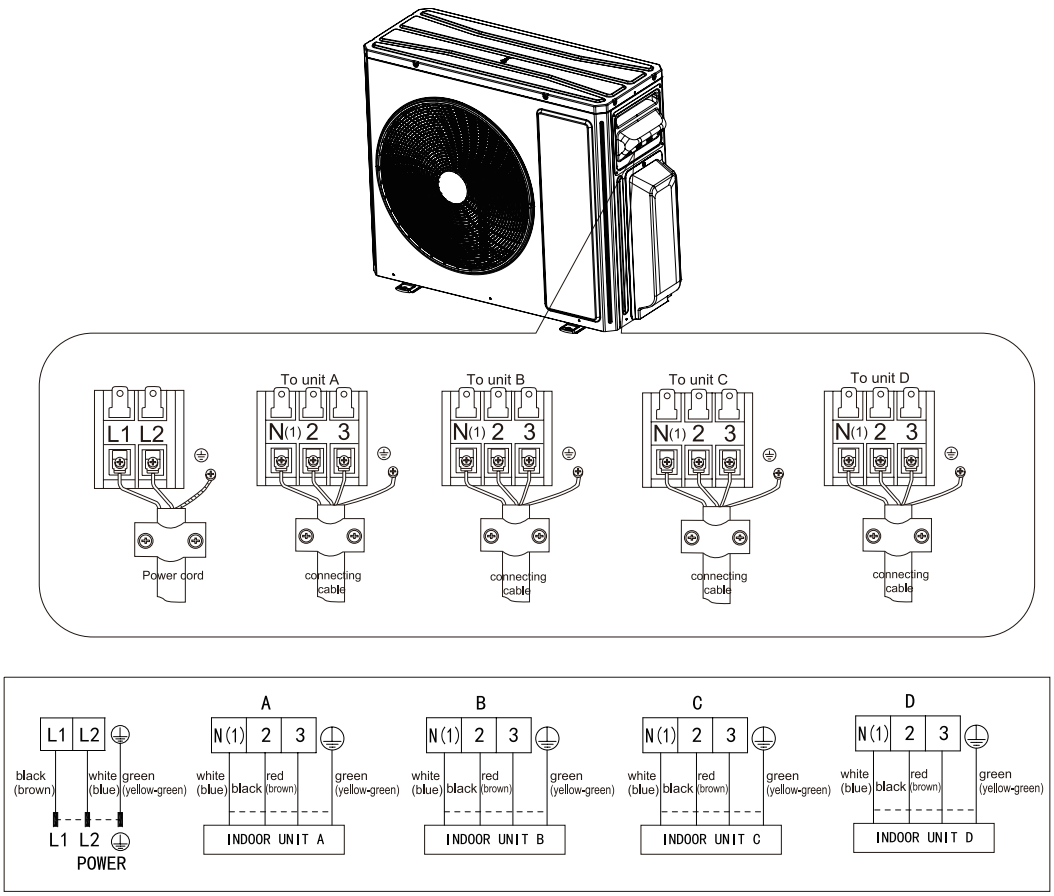
To unit A
To unit B
To unit C
To unit D
L1 L2
N(1) 2 3
Power cord
connecting cable
A
B
C
D
black (brown)
white (blue)
green (yellow-green)
red (brown)
L1 L2
POWER
INDOOR UNIT A
INDOOR UNIT B
INDOOR UNIT C
INDOOR UNIT D

42K:

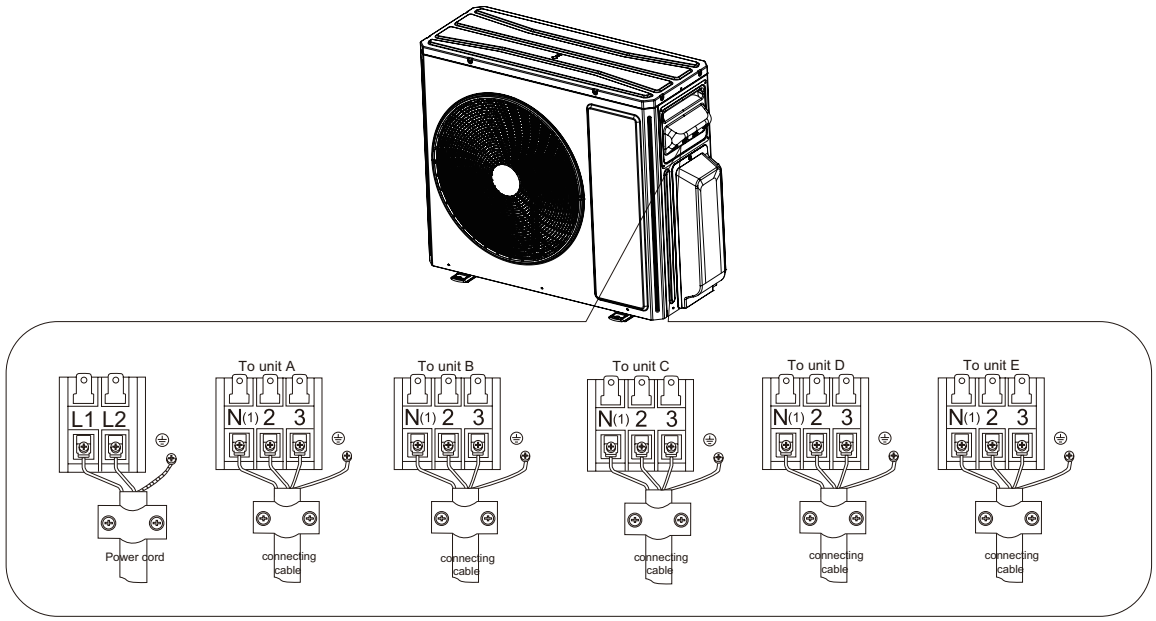
L1 L2
Power cord
To unit A
N(1) 2 3
connecting cable
To unit B
N(1) 2 3
connecting cable
To unit C
N(1) 2 3
connecting cable
To unit D
N(1) 2 3
connecting cable
To unit E
N(1) 2 3
connecting cable

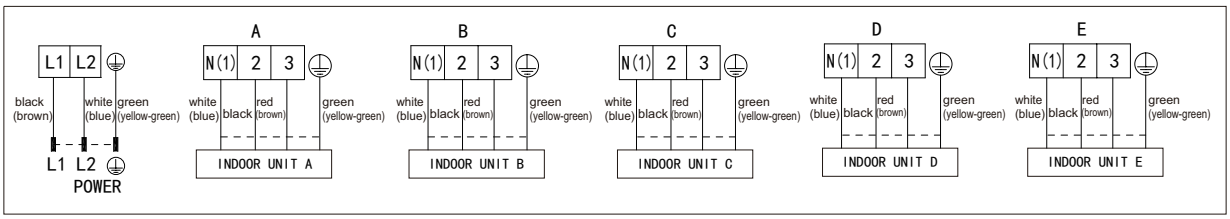
L1 L2
black (brown)
white (blue)
green (yellow-green)
L1 L2
POWER
A
N(1) 2 3
white (blue)
black
red (brown)
green (yellow-green)
INDOOR UNIT A
B
N(1) 2 3
white (blue)
black
red (brown)
green (yellow-green)
INDOOR UNIT B
C
N(1) 2 3
white (blue)
black
red (brown)
green (yellow-green)
INDOOR UNIT C
D
N(1) 2 3
white (blue)
black
red (brown)
green (yellow-green)
INDOOR UNIT D
E
N(1) 2 3
white (blue)
black
red (brown)
green (yellow-green)
INDOOR UNIT E

8.2 Installing the Outdoor Unit

⚠ Use bolts to secure the unit to a flat, solid floor.

When mounting the unit on a wall or the roof, make sure the support is firmly secured so that it cannot move in the event of intense vibrations or a strong wind.

⚠ Do not install the outdoor unit in pits or air vents.

Installing the pipes

⚠ Use suitable connecting pipes and equipment for the refrigerant R32.

Models(m)	18K	24K	30K	36K	42K	
Max. connection pipe length	40	60	80	80	100	
Max. connection pipe length(Simpleone indoor unit)	20	20	25	25	25	

⚠ The refrigerant pipes must not exceed the maximum heights.

⚠ Wrap all the refrigerant pipes and joints.

⚠ Tighten the connections using two wrenches working in opposite directions.

Caution: Installation Must be Performed in Accordance with the NEC/CEC by Authorized Personnel Only.

Install the drain fitting and the drain hose (for model with heat pump only)

Condensation is produced and flows from the outdoor unit when the appliance is operating in the heating mode. In order not to disturb neighbours and to respect the environment,install a drain fitting and a drain hose to channel the condensate water.

Install the drain fitting and rubber washer on the outdoor unit chassis and connect a drain hose to itn as shown in the figure.

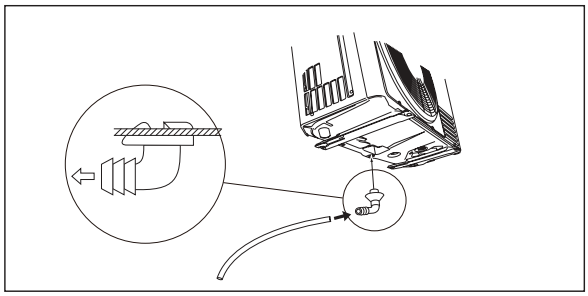

8.3 Bleeding

Humid air left inside the refrigerant circuit can cause compressor malfunction. After having connected the indoor and outdoor units, bleed the air and humidity from the refrigerant circuit using a vacuum pump.

(1) Unscrew and remove the caps from the 2-way and 3-way valves.

(2) Unscrew and remove the cap from the service valve.

(3) Connect the vacuum pump hose to the service valve.

(4) Operate the vacuum pump for 10-15 minutes until an absolute vacuum of 10 mm Hg has been reached.

(5) With the vacuum pump still in operation, close the low-pressure knob on the vacuum pump coupling. Stop the vacuum pump.

(6) Open the 2-way valve by 1/4 turn and then close it after 10 seconds. Check all the joints for leaks using liquid soap or an electronic leak device.

(7) Turn the body of the 2-way and 3-way valves. Disconnect the vacuum pump hose.

(8) Replace and tighten all the caps on the valves.

Piping size (inch)	Twisting moment (N·m)
1/4"	15-20
3/8"	35-40
1/2"	45-50
5/8"	60-65
3/4"	70-75

When the adaptor is required for the connection of indoor unit and outdoor unit, the method of pipe connection as follows:

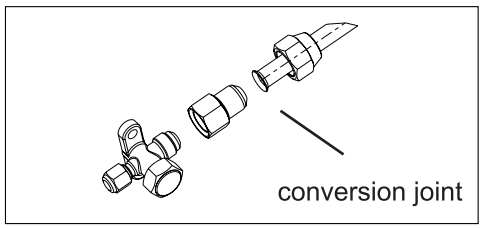

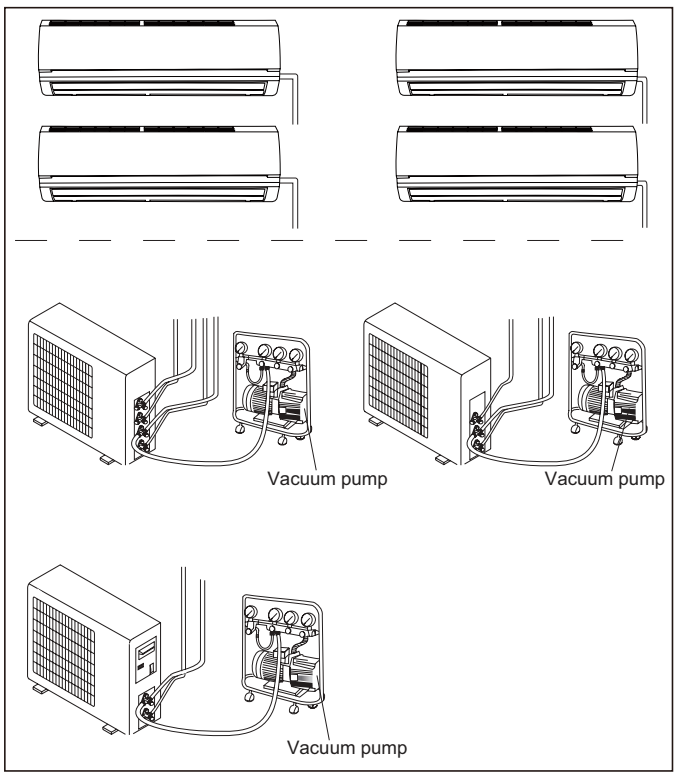

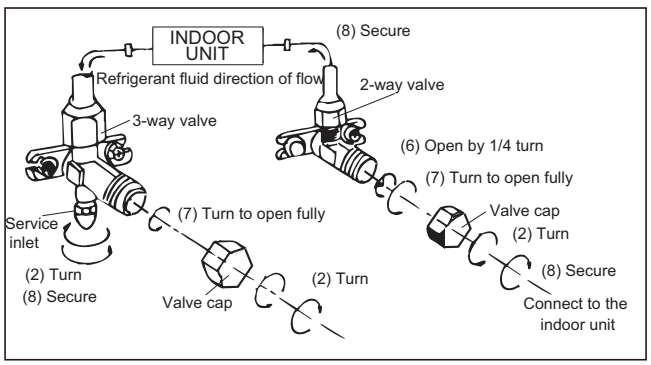

8.4 Maintenance

⚠ Use suitable instruments for the refrigerant R32.

⚠ Do not use any other refrigerant than R32.

⚠ Do not use mineral oils to clean the unit.

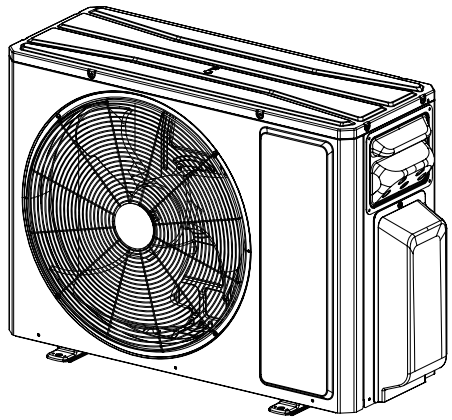

8.5 Installation Dimension Diagram

⚠ The installation must be done by trained and qualified service personnel with reliability according to this manual.

⚠ Contact service center before installation to avoid the malfunction due to unprofessional installation.

⚠ When picking up and moving the units, you must be guidedby trained and qualified person.

⚠ Ensure that the recommende dspace is left around the appliance.

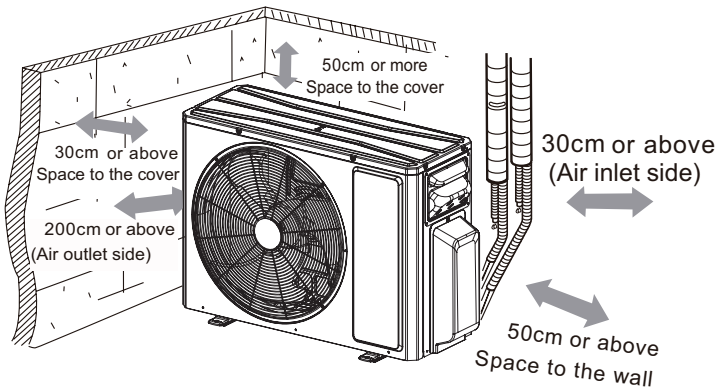

Fix the support of outdoor unit (select it according to the actual installation situation)

1. Select installation location according to the house structure.
2. Fix the support of outdoor unit on the selected location with expansion screws.

NOTICE:

● Take sufficient protective measures when installing the outdoor unit.

● Make sure the support can withstand at least four times of the unit weight.

● The outdoor unit should be installed at least 3cm above the floor in order to install drain joint. (for the model with heating tube, the installation height should be no less than 20cm.)

●For the unit with cooling capacity of 2300W ~ 5000W, 6 expansion screws are needed; for the unit with cooling capacity of 6000W~ 8000W, 8 expansion screws are needed; for the unit with cooling capacity of 10000W~16000W, 10 expansion screws are needed.

●As for the shape of drainage joint, please refer to the current product. Do not install the drainage joint in the severe cold area. Otherwise, it will be frosted and then cause malfunction.

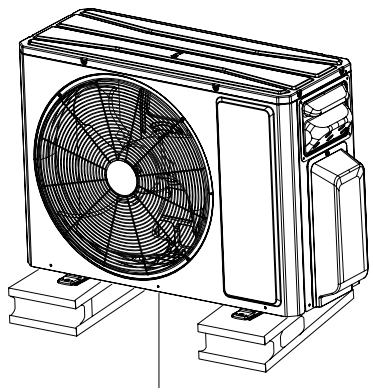

8.6 Check after Installation

Check Items	Problems Owing to Improper Installation
Is the installation reliable?	The unit may drop, vibrate or make noises
Has the gas leakage been checked?	May cause unsatisfactory cooling (heating) effect
Is the thermal insulation of the unit sufficient?	May cause condensation and water dropping
Is the drainage smooth?	May cause condensation and water dropping
Does the power supply voltage accord with the rated voltage specified on the nameplate?	The unit may bread down or the components may be burned out
Are the lines and pipelines correctly installed?	The unit may bread down or the components may be burned out
Has the unit been safely grounded?	Risk of electrical leakage
Are the models of lines in conformity with requirements?	The unit may bread down or the components may be burned out
Are there any obstacles near the air inlet and outlet of the indoor and outdoor units?	The unit may bread down or the components may be burned out
Have the length of refrigerating pipe and refrigerant charge amount been recorded?	It is not easy to decide the charge amount of refrigerant.

9. Maintenance

9.1 Error Code List

Note: Error codes differ by indoor unit type – consult the unit's specific error code.

Error code	Malfunction name	AC status	Possible causes
C5	Malfunction of jumper cap	The complete unit stops operation	1. Jumper cap is not installed in control panel; 2. Poor contact of jumper cap; 3. Jumper cap is damaged; 4. The tested circuit of jumper cap on control panel is abnormal.
E6	Communication malfunction between indoor unit and outdoor unit	Cool: compressor stops operation, while indoor fan operates; Heat: all loads stops operation.	See "Communication malfunction"
H5	IPM protection	Cool/Dry: compressor stops operation, while indoor fan operates. Heat: all loads stops operation.	See "IPM protection, over-phase current of compressor"
L3 LA	Malfunction of outdoor fan/ malfunction of DC motor	Cool/Dry: all loads stops operation except indoor fan. Heat: all loads stops operation.	1. Outdoor condenser, air inlet and air outlet are blocked by filth or dirt; 2. Fan is blocked or loosened; 3. Motor or connection wire of motor is damaged; 4. Main board of outdoor unit is damaged; (As for dual-outdoor fan, L3 indicates fan 1; LA indicates fan 2)
H3	Overload protection of compressor	Cool/Dry: compressor stops operation, while indoor fan operates. Heat: all loads stops operation.	1. Overload wire of compressor is loose; 2. The overload protector is damaged. Under normal circumstances, the resistance between both ends of terminal is less than 1ohm. 3.See "Overload protection of compressor , High discharge temperature protection of compressor"
F0	Refrigerant insufficient protection, cut-off protection of refrigerant	Cool: compressor and outdoor fan stops operation, while indoor fan operates; Heat: Compressor, outdoor fan and indoor fan stops operation.	1. Is system cooling under high humidity environment, thus temperature difference of heat transfer is small; 2. Check whether the big valve and small valve of outdoor unit are opened completely; 3. Is the temperature sensor of evaporator of indoor unit loose? 4. Is the temperature sensor of condenser of outdoor unit loose? 5. Is the capillary or the electronic expansion valve blocked? 6. Is refrigerant leaking?
F1	Indoor ambient temperature sensor is open/short-circuited	Cool/Dry: indoor fan operates, while compressor and outdoor fan stops operation; Heat: all loads stops operation.	1. Temperature sensor is not well connected; 2. Temperature sensor is damaged 3. Main board of indoor unit is damaged.
F2	Indoor evaporator temperature sensor is open/short-circuited	Cool/Dry: indoor fan operates, while compressor and outdoor fan stops operation; Heat: all loads stops operation.	1. Temperature sensor is not well connected; 2. Temperature sensor is damaged 3. Main board of indoor unit is damaged.
H6	No feedback from indoor unit's motor	The complete unit stops operation	1. Is the fan blocked? 2. Is the motor terminal loose? 3. Is the connection wire of motor damaged? 4. Is the motor damaged? 5. Is the main board of indoor unit damaged?
LP	Indoor unit and outdoor can be matched with each other	Heat: compressor, outdoor unit and indoor fan stops operation.	Capacity of indoor unit and outdoor unit can't be matched.
C4	Malfunction of jumper cap of outdoor unit	Heat: all loads are stopped; other modes: outdoor unit stops operation.	Jumper cap of outdoor unit hasn't been installed.
b7	Gas valve temperature sensor is ON / short-circuited		1. Temperature sensor is not well connected or damaged; 2. The wire of temperature sensor is damaged, causing short circuit to copper pipe or outer casing; 3. Main board of outdoor unit is damaged.

Error code	Malfunction name	AC status	Possible causes
b5	Liquid valve temperature sensor is ON / short-circuited		1. Temperature sensor is not well connected or damaged; 2. The wire of temperature sensor is damaged, causing short circuit to copper pipe or outer casing; 3. Main board of outdoor unit is damaged.
E1	High pressure protection of system	Cool/Dry: all loads stops operation except indoor fan; Heat: all loads stops operation.	1. Heat exchange of outdoor unit is too dirty, or it blocked the air inlet/outlet; 2. Is power voltage normal; (three-phase unit) 3. Ambient temperature is too high; 4. Wiring of high pressure switch is loose or high pressure switch is damaged; 5. The internal system is blocked; (dirt blockage, ice blockage, oil blockage, angle valve is not completely opened) 6. Main board of outdoor unit is damaged; 7. Refrigerant is too much.
E3	Low pressure/low system pressure protection/ compressor low pressure protection	Cool: compressor, outdoor fan and indoor fan stop operation; Heat: compressor and outdoor fan stop operation at first. About 1min later, indoor fan stops operation; 2mins later, the 4-way valve stop operation.	1. Low pressure switch is damaged; 2. Refrigerant inside the system is insufficient.
E4	High discharge temperature protection of compressor	Cool/Dry: compressor and outdoor fan stops operation, while indoor fan operates; Heat: all loads stops operation.	See “Overload protection of compressor.
E5	AC overcurrent protection	Cool/Dry: compressor and outdoor fan stops operation, while indoor fan operates; Heat: all loads stops operation.	1. Power voltage is unstable; 2. Power voltage is too low; 3. System load is too high, which leads to high current; 4. Heat exchange of indoor unit is too dirty, or it blocked the air inlet/outlet; 5. Fan motor operation is abnormal; the fan speed is too low or not functioning; 6. Compressor is blocked; 7. The internal system is blocked; (dirt blockage, ice blockage, oil blockage, angle valve is not completely opened) 8. Main board of outdoor unit is damaged. See “AC overcurrent protection”
E7	Mode shock/sysmte mode shock	Load of indoor unit stops operation (indoor fan, E-heater, swing)	Malfunction of one-to-more system; there may be two indoor units which has set the shock mode, such as one is cooling and the other is heating.
E8	High temperature prevention protection	Cool: compressor stops operation while indoor fan operates; Heat: all loads stops operation.	See “High temperature prevention protection; high power; system isabnormal”
EE	Malfunction of EEPROM	Cool/Dry: compressor stops operation, while indoor fan operates; Heat: all loads stops operation.	Main board of outdoor unit is damaged.
Fo	Refrigerant-recovery mode	Cool/Dry: compressor and outdoor fan stops operation, while indoor fan operates.	Refrigerant recovery. The maintenance personnel operate it when he is maintaining the unit.
F3	Outdoor ambient temperature is open/short-circuited	Cool/Dry: compressor and outdoor fan stop operation, while indoor fan operates; Heat: all loads stops operation.	1. Temperature sensor is not connected well or damaged; 2.Temperature sensor wire of outdoor unit is damaged; short circuit between the temperature sensor and copper pipe or outer case 3.Main board of outdoor unit is damaged;

Error code	Malfunction name	AC status	Possible causes
F4	Outdoor condenser temperature sensor is open/short-circuited	Cool/Dry: compressor and outdoor fan stop operation, while indoor fan operates; Heat: after operating for 3mins, all loads stops operation.	1. Temperature sensor is not connected well or damaged; 2. Temperature sensor wire of outdoor unit is damaged; short circuit between the temperature sensor and copper pipe or outer case; 3. Main board of outdoor unit is damaged.
F5	Outdoor air discharge temperature is open/short-circuited	Complete unit stops operation; motor of sliding door is cut off power.	1. The exhaust temperature sensor is not connected well or damaged. 2.Temperature sensor wire of outdoor unit is damaged; short circuit between the temperature sensor and copper pipe or outer case 3.Main board of outdoor unit is damaged;
FC	Malfunction of micro switch	Cool/Dry: compressor stops operation, while indoor fan operates; Heat: all loads stops operation.	1. The sliding door is blocked; 2. Malfunction of the photoelectric inspection panel of sliding door;
H7	Desynchronizing of compressor	Cool/Dry: compressor stops operation, while indoor fan operates; Heat: all loads stops operation.	See “Desynchronization diagnosis for compressor”
HC	PFC protection	Cool/Dry: compressor stops operation, while indoor fan operates; Heat: all loads stops operation.	1. The power grid quality is bad; AC input voltage fluctuates sharply; 2. Power plug of air conditioner or wiring board or reactor is not connected reliably; 3. Indoor and outdoor heat exchanger is too dirty, or air inlet/outlet is blocked; 4. Main board of outdoor unit is damaged.
HE	Demagnetization protection of compressor	Cool: compressor and outdoor fan stop operation; Heat: compressor and outdoor fan stop operation at first; about 1min later, indoor fan stops operation.	1. The main board of outdoor unit is damaged; 2. Compressor is damaged;
JF	Communication malfunction between indoor unit and inspection board	Normal operation	1. Poor connection between the indoor unit and the inspection board. 2.The main board of indoor unit is damaged; 3. The inspection board is damaged;
L1	Malfunction of humidity sensor	Compressor, outdoor fan and indoor fan stop operation;	The inspection board is damaged.
L9	High power protection	Cool: compressor and outdoor fan stops operation, while indoor fan operates.	Please refer to "High-temperature protection, Overcurrent protection, IPM Protection".
Lc	Start-up failed	Cool/Dry: compressor stops, while indoor fan operates; Heat: all loads stops operation.	See “Malfunction diagnosis for failure startup”
Ld	Lost phase	Cool: compressor and outdoor fan stop operation; Heat: compressor and outdoor fan stop operation at first; about 1min later, indoor fan stops operation.	1. The main board of outdoor unit is damaged; 2. The compressor is damaged; 3. The connection wire of compressor is not connected well.
PS	Over-phase current protection of compressor	Cool/Dry: compressor stops operation, while indoor fan operates; Heat: all loads stops operation.	Please refer to "IPM Protection".

Error code	Malfunction name	AC status	Possible causes
oE	Undefined outdoor unit error	Cool: compressor and outdoor fan stops operation, while indoor fan operates; Heat: compressor, outdoor fan and indoor fan stop operation.	1. Outdoor ambient temperature exceeds the operation range of unit (eg: less than-20°C or more than 60°C for cooling; more than 30°C for heating); 2. Are wires of compressor not connected tightly? 3. Failure startup of compressor? 4. Is compressor damaged? 5. Is main board damaged?
P6	Communication malfunction between the drive board and the main board	Cool: compressor and outdoor fan stops operation; Heat: compressor and outdoor fan stop at first; about 1min later, indoor fan stops operation;	1. The drive board is damaged; 2. The main board of outdoor unit is damaged; 3. The drive board and the main board is not connected well.
P7	Circuit malfunction of module temperature sensor	Cool/Dry: compressor stops operation, while indoor fan operates; Heat: all loads stops operation.	Replace outdoor control board
P8	Module overheating protection	Cool: compressor stops operation, while indoor fan operates; Heat: all loads stops operation.	1. Air inlet / air outlet of outdoor unit are blocked by filth or dirt; 2. Condenser of outdoor unit is blocked by filth or dirt; 3. IPM screw of main board is not tightened; 4. Main board of outdoor unit is damaged;
PF	Malfunction of ambient temperature sensor of drive board	Cool: compressor, outdoor fan and indoor fan stop operation; Heat: compressor and outdoor fan stop operation at first; about 1min later, indoor fan stops operation.	1. The ambient temperature sensor of the drive board is not connected well; 2. Malfunction of the ambient temperature sensor of drive board.
PH	DC bus voltage is too high	Cool/Dry: compressor stops operation, while indoor fan operates; Heat: all loads stops operation.	1. Measure the voltage between position L and position N on the wiring board (XT). If it's higher than 265 VAC, please turn on the unit until the power voltage is decreased to the normal range; 2. If the AC input is normal, please replace the outdoor control board.
PL	DC bus voltage is too low	Cool/Dry: compressor stops operation, while indoor fan operates; Heat: all loads stops operation.	1. Measure the voltage between position L and position N on the wiring board (XT). If it's lower than 150 VAC, please turn on the unit until the power voltage is increased to the normal range; 2. If the AC input is normal, please replace the outdoor control board.
PU	Charging malfunction of capacitor	Cool/Dry: compressor stops operation, while indoor fan operates; Heat: all loads stops operation.	See "Charging malfunction of capacitor"
rF	Malfunction of RF module	Cool: compressor and outdoor fan stop operation; Heat: compressor and outdoor fan stop operation at first; about 1min later, indoor fan stops operation.	1. The connection wire of RF module is not connected well. 2. Malfunction of RF module;
U1	Phase current detection circuit malfunction of	Cool: compressor and outdoor fan stops operation, while indoor fan operates; Heat: compressor, outdoor fan and indoor fan stops operation.	The control board is damaged
U2	Lost phase protection of compressor	Cool: compressor and outdoor fan stop operation; Heat: compressor and outdoor fan stop operation at first; about 1min later, indoor fan stops operation.	1. The main board of outdoor unit is damaged; 2. The compressor is damaged; 3. The connection wire of compressor is not connected well.

Error code	Malfunction name	AC status	Possible causes
U3	DC bus voltage drop malfunction	Cool/Dry: compressor stops operation, while indoor fan operates; Heat: all loads stops operation.	The power voltage is unstable.
U5	Current detection malfunction of unit	Cool: compressor and outdoor fan stops operation, while indoor fan operates; Heat: compressor, outdoor fan and indoor fan stops operation.	1. Is the complete unit lacking of refrigerant? 2. There's malfunction for the circuit of control board of outdoor unit. Replace the control board of outdoor unit.
U7	4-way valve is abnormal	This malfunction occurs when the unit is heating. All loads stops operation.	1. Power voltage is lower than AC175V; 2. Wiring terminal of 4-way valve is loose or broken;3. 4-way valve is damaged. Replace the 4-way valve.
U8	Malfunction of zero-crossing signal of indoor unit	Compressor, outdoor fan and indoor fan stop operation.	1. The power is abnormal; 2. Main board of indoor unit is damaged.
U9	Zero-crossing malfunction of outdoor unit	Cool: compressor stops operation, while indoor fan operates; Heat: all loads stops operation.	Replace the control board of outdoor unit.
E2	Evaporator anti-freezing protection		Not error code, it is the status code in cooling process
E9	Anti cold air protection		Not error code, it is the status code in cooling process
	Defrosting	Heat indicator Flash once/10s	Not error code, it is the status code in cooling process
EA	Refrigerant leak alarm		The air conditioner may have refrigerant leakage.

Analysis or processing of some of the malfunction display:

1. Compressor discharge protection

Possible causes: shortage of refrigerant; blockage of air filter; poor ventilation or air flow short pass for condenser; the system has non-condensing gas (such as air, water etc.); blockage of capillary assy (including filter); leakage inside four-way valve causes incorrect operation; malfunction of compressor; malfunction of protection relay; malfunction of discharge sensor; outdoor temperature too high.

Processing method: refer to the malfunction analysis in the above section.

2. Low voltage overcurrent protection

Possible cause: Sudden drop of supply voltage.

3.Communication malfunction

Processing method: Check if communication signal cable is connected reliably.

4. Sensor open or short circuit

Processing method: Check whether sensor is normal, connected with the corresponding position on the controller and if damage of lead wire is found.

5. Compressor over load protection

Possible causes: insufficient or too much refrigerant; blockage of capillary and increase of suction temp.; improper running of compressor, burning in or stuck of bearing, damage of discharge valve; malfunction of protector.

Processing method: adjust refrigerant amount; replace the capillary; replace the compressor; use universal meter to check if the contactor of compress or is fine when it is not overheated, if not replace the protector.

6. System malfunction

i.e.overload protection. When tube temperature(Check the temperature of outdoor heat exchanger when cooling and check the temperature of indoor heat exchanger when heating) is too high, protection will be activated.

Possible causes: Outdoor temperature is too high when cooling; insufficient outdoor air circulation; refrigerant flow malfunction.

please refer to the malfunction analysis in the previous section for handling method .

7. IPM module protection

Processing method: Once the module malfunction happens,if it persists for a long time and can not be self canceled, cut off the power and turn off the unit,and then re-energize the unit again after about 10 min. After repeating the procedure for sever times, if the malfunction still exists,replace the module.

9.2 Procedure of Troubleshooting

1. Troubleshooting for jumper cap C5

Main check points:
(1) jumper cap (2) control board of indoor unit

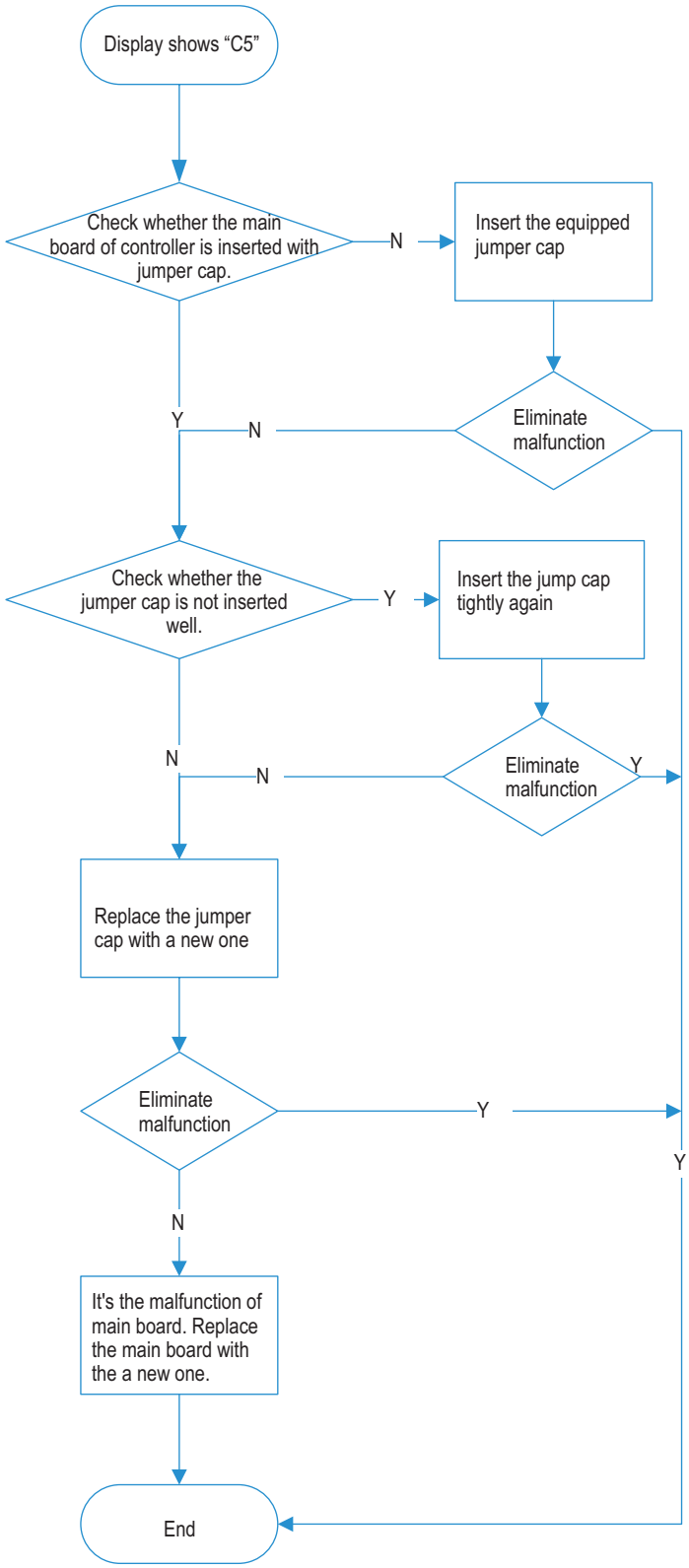

2. Communication malfunction E6

Main check points:

(1) Connection wire between indoor unit and outdoor unit
(2) Wiring inside the unit
(3) Communication circuit of control board of indoor unit
(4) Communication circuit of control board of outdoor unit

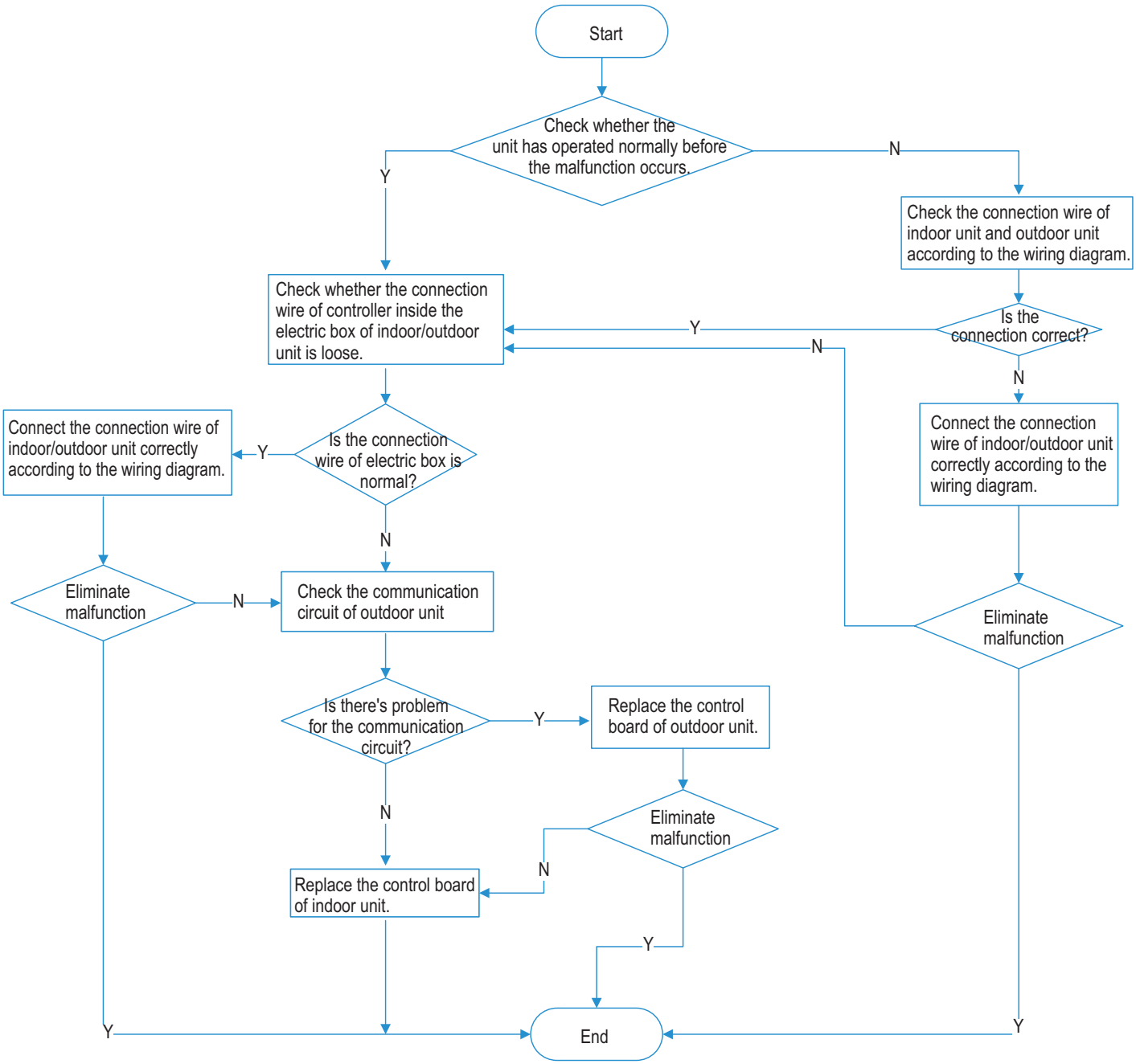

Note: method for checking the communication circuit of inverter split type and floor standing unit: cut off the communication wires of indoor/outdoor unit, and then measure the voltage between COM and N of the control board of outdoor unit (DC notch, about 56V)

3. IPM protection H5, over-phase current of compressor P5

Main check points:
(1) compressor COMP terminal (2) power supply voltage (3) compressor
(4) charging amount of refrigerant (5) air inlet and air outlet of indoor/outdoor unit

NOTE:The control board as below means the control board of outdoor unit.

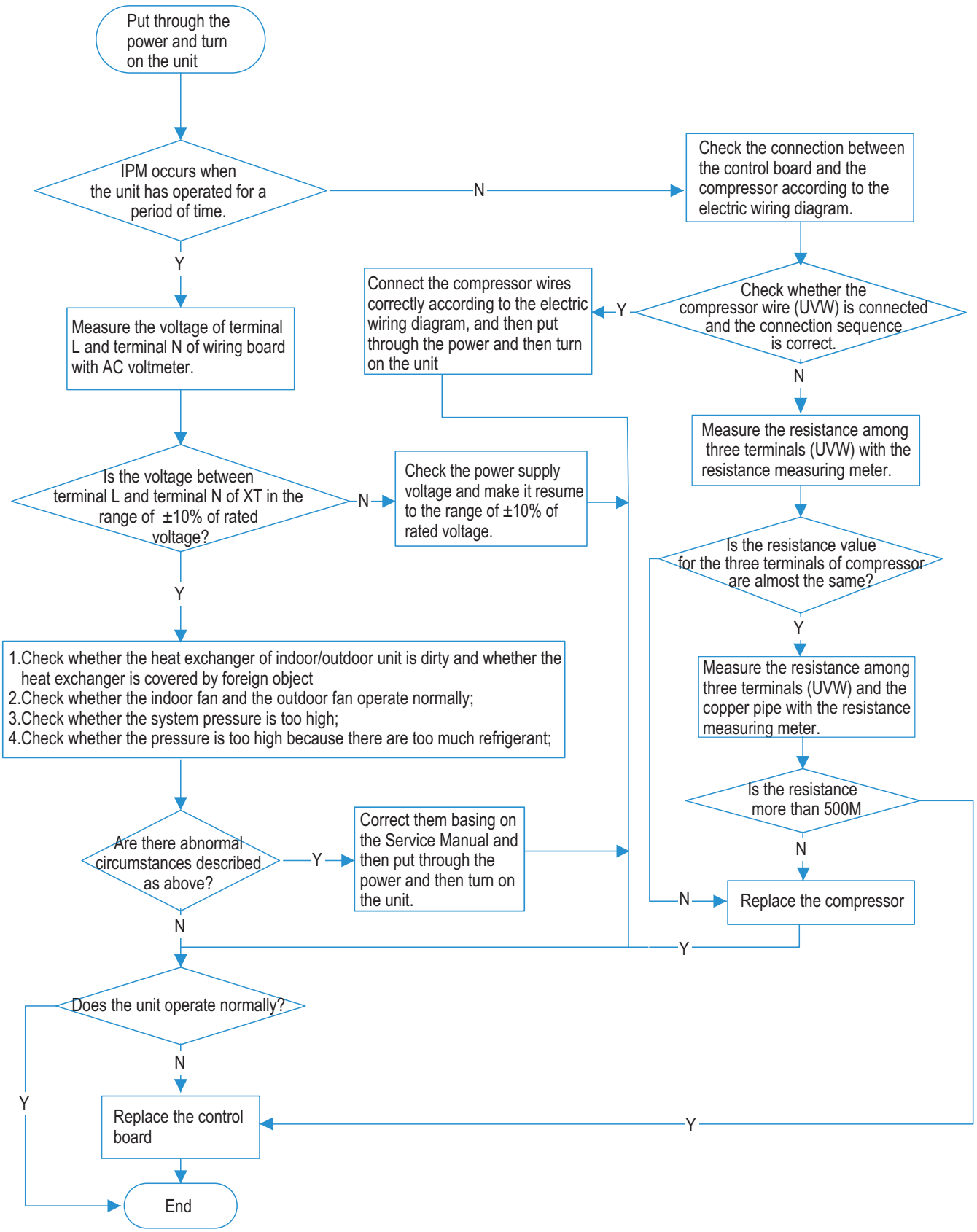

4. Overload protection of compressor H3, high discharge temperature, protection of compressor E4

Main check points:

(1) electronic expansion valve (2) expansion valve terminal

(3) charging amount of refrigerant (4) overload protector

NOTE:The control board as below means the control board of outdoor unit.

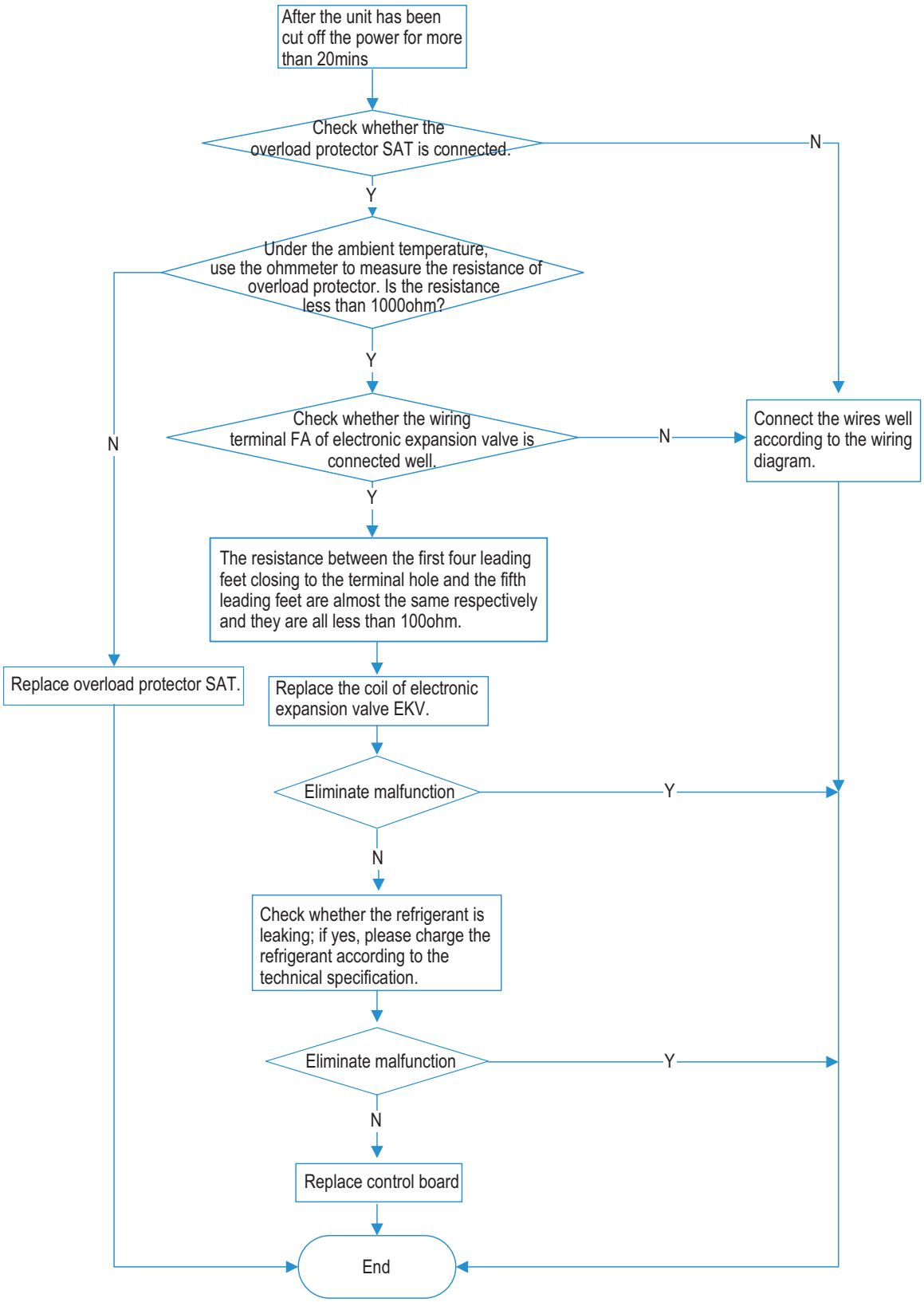

5.Troubleshooting for temperature sensor F 1,F2,F3,F4,F5

Main check points:
(1) connection terminal (2) temperature sensor (3) main board

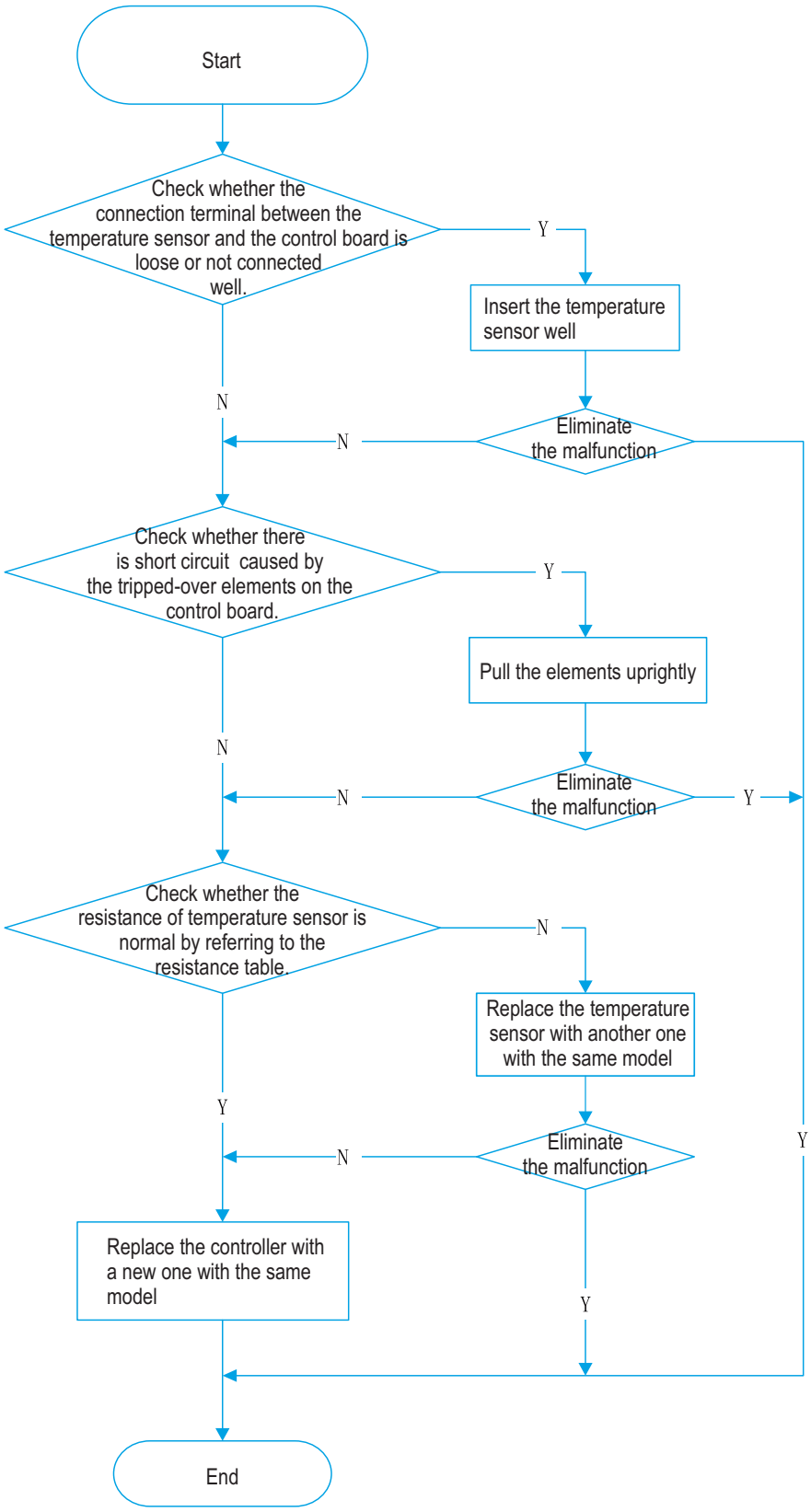

6.High temperature prevention protection E8; high power L9; system is abnormal H4

Main check points:
(1) outdoor temperature (2) fan (3)air inlet and air outlet of indoor/outdoor unit
NOTE:The control board as below means the control board of outdoor unit.

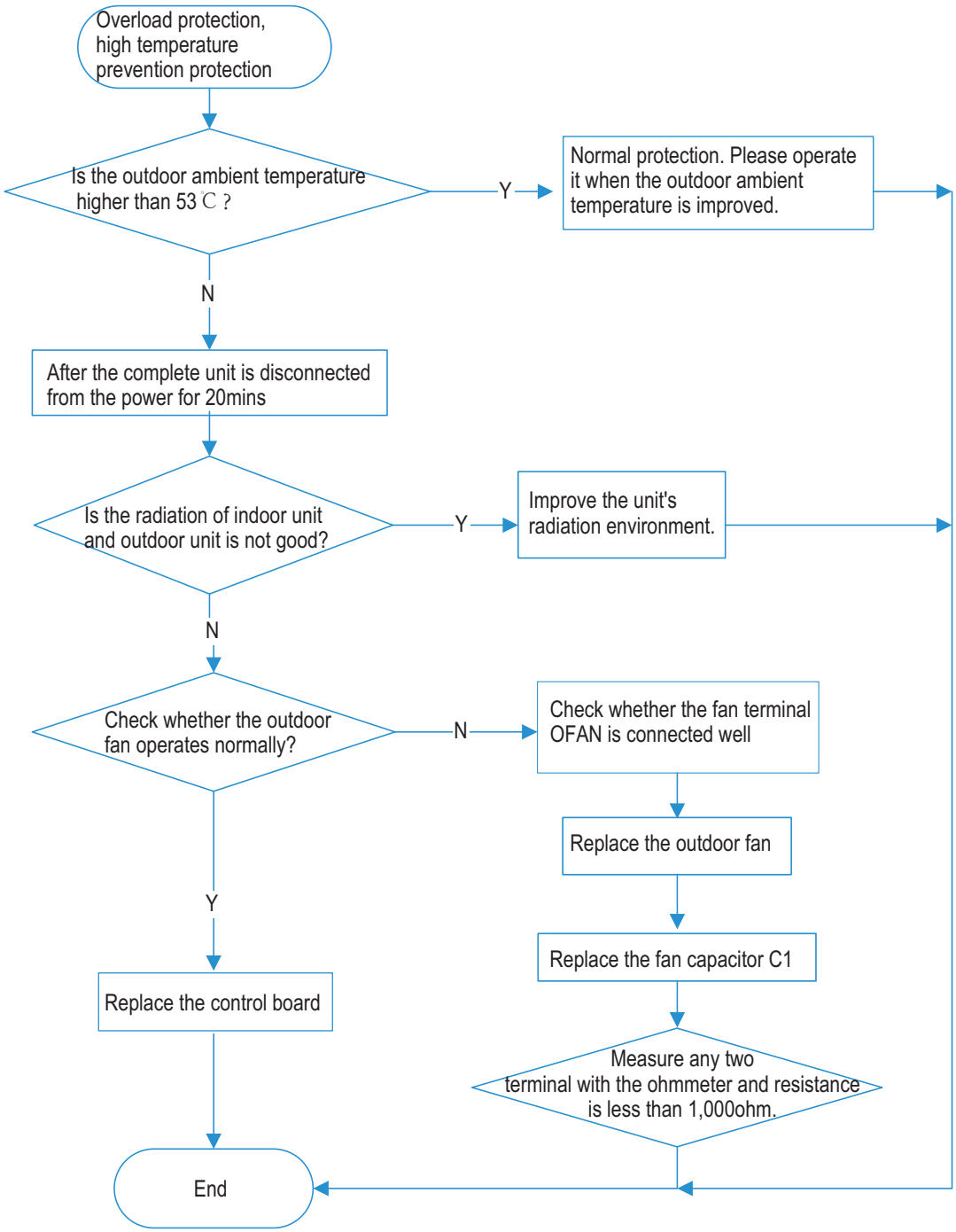

7.Desynchronization diagnosis for compressor H7

Main check point:

(1) system pressure (2) power supply voltage

NOTE:The control board as below means the control board of outdoor unit.

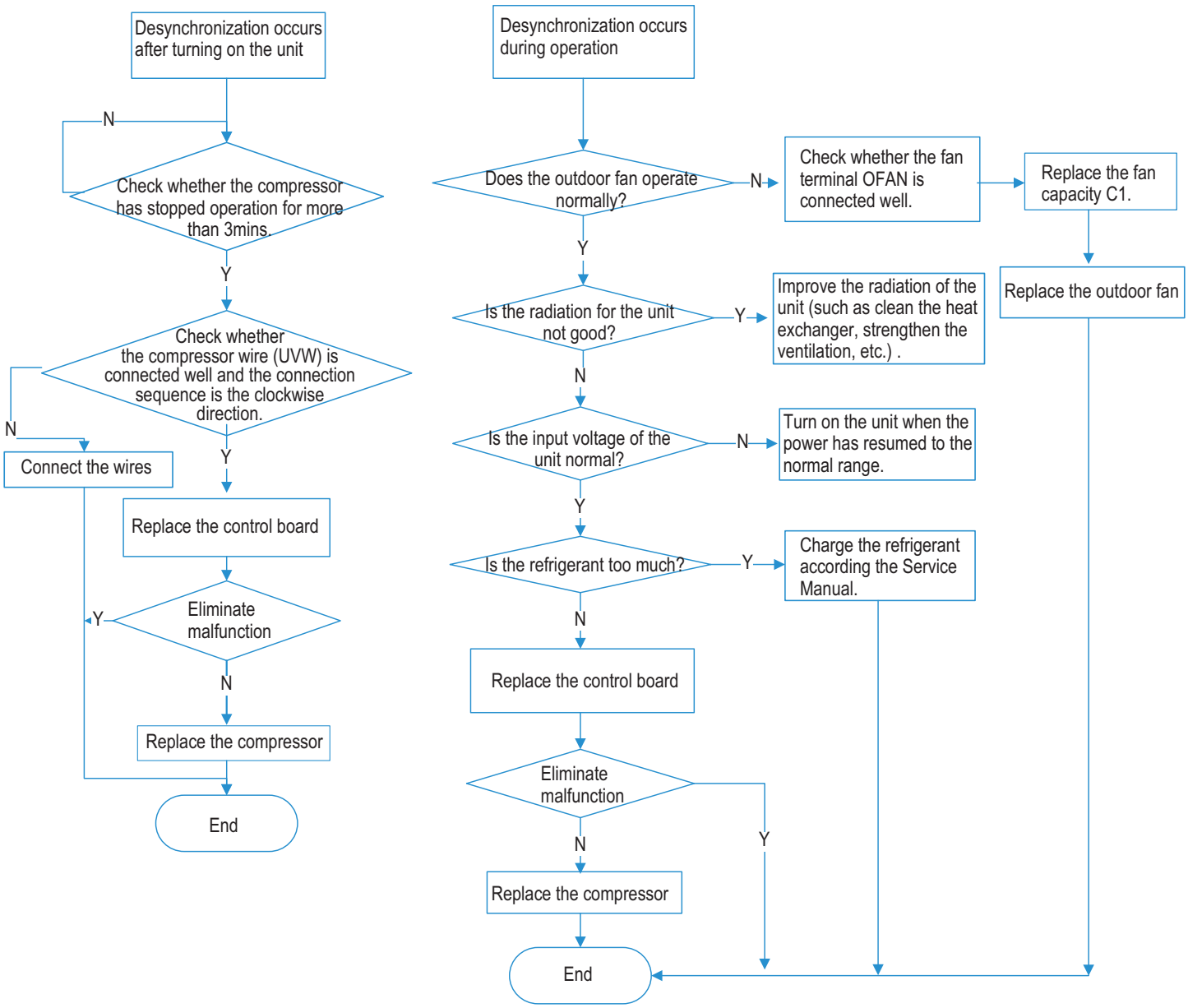

8.Malfunction diagnosis for failure startup Lc

Main check points:

(1) compressor wire (2) compressor (3) charging amount of refrigerant

NOTE:The control board as below means the control board of outdoor unit.

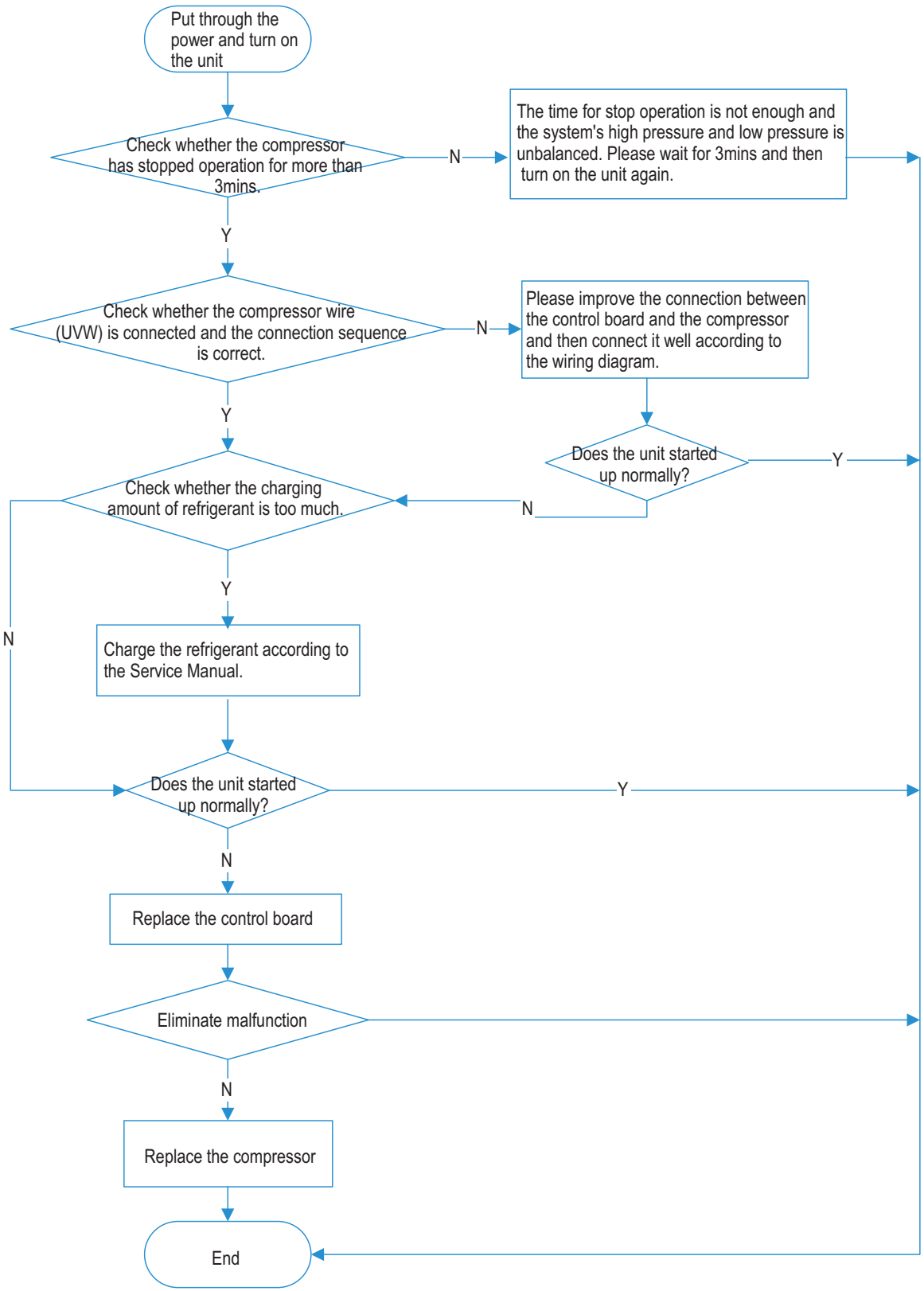

9. Charging malfunction of capacitor PU

Main check points: (1) wiring board XT (2) reactor

NOTE:The control board as below means the control board of outdoor unit.

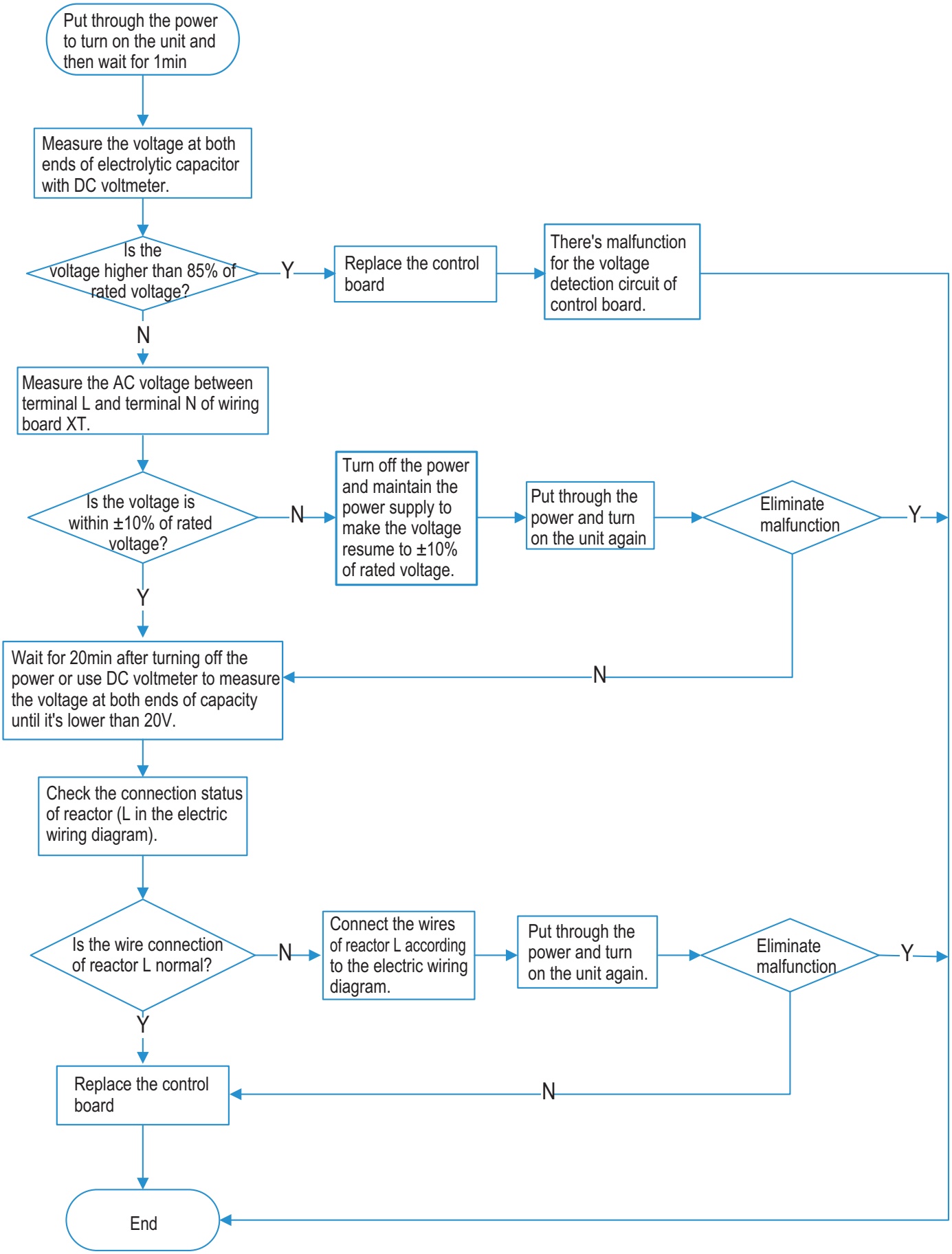

10. Troubleshooting-motor(indoor fan) doesn't operate H6

Main check points:

(1) connection terminal (2) motor (3) control board AP1 of indoor unit (4) blade

10.1 DC motor

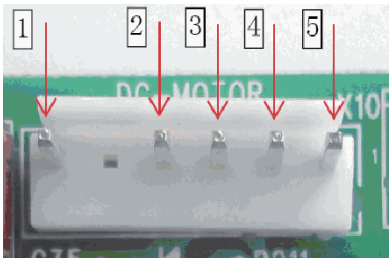

10.2 PG motor

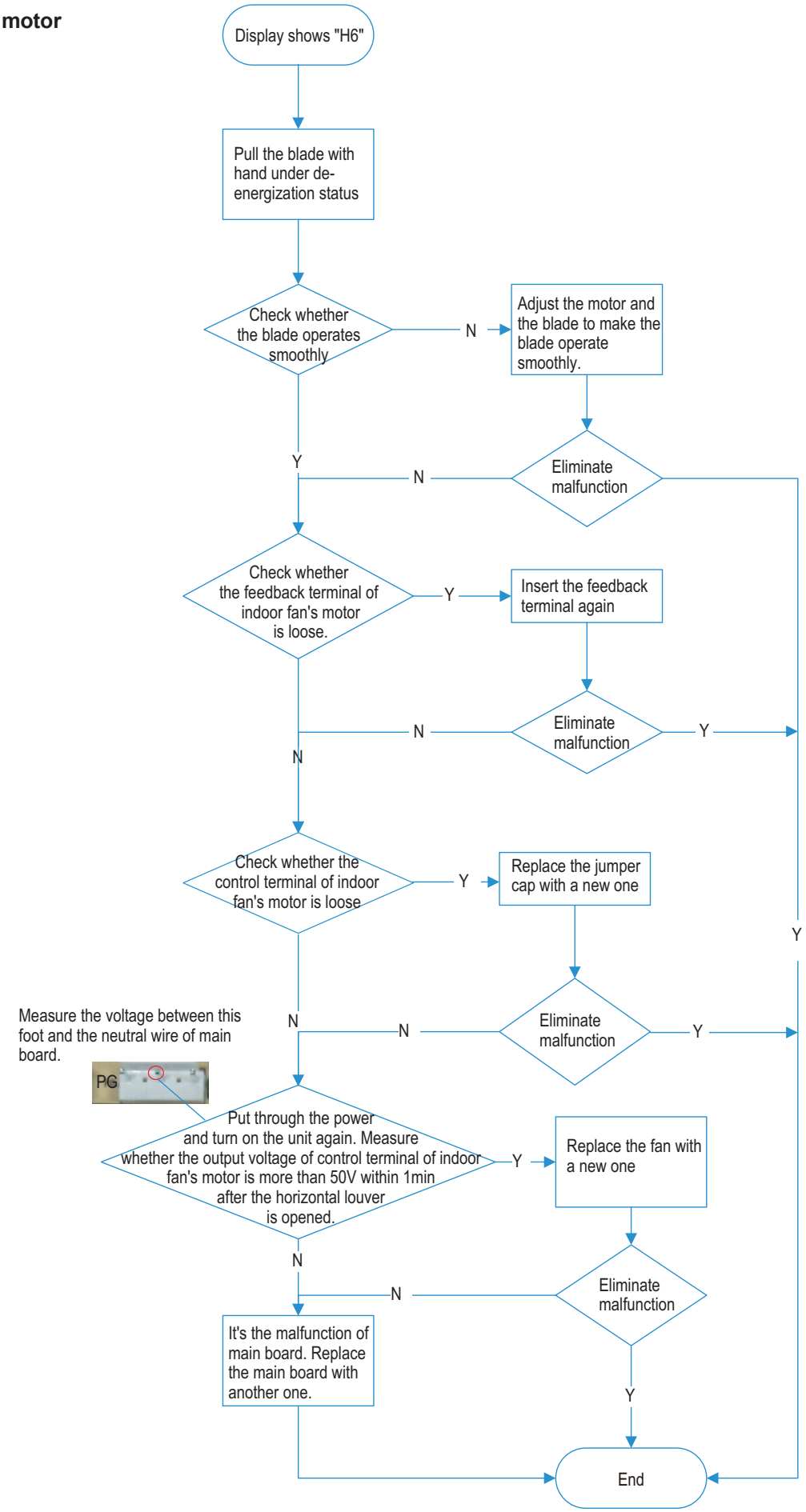
Display shows "H6"
Pull the blade with hand under de-energization status
Check whether the blade operates smoothly
N
Adjust the motor and the blade to make the blade operate smoothly.
Y
N
Eliminate malfunction
Check whether the feedback terminal of indoor fan's motor is loose.
Y
Insert the feedback terminal again
N
Eliminate malfunction
Y
N
Check whether the control terminal of indoor fan's motor is loose
Y
Replace the jumper cap with a new one
Y
Measure the voltage between this foot and the neutral wire of main board.
N
N
Eliminate malfunction
Y
PG
Put through the power and turn on the unit again. Measure whether the output voltage of control terminal of indoor fan's motor is more than 50V within 1min after the horizontal louver is opened.
Y
Replace the fan with a new one
N
N
Eliminate malfunction
It's the malfunction of main board. Replace the main board with another one.
Y
End

11. AC overcurrent protection E5

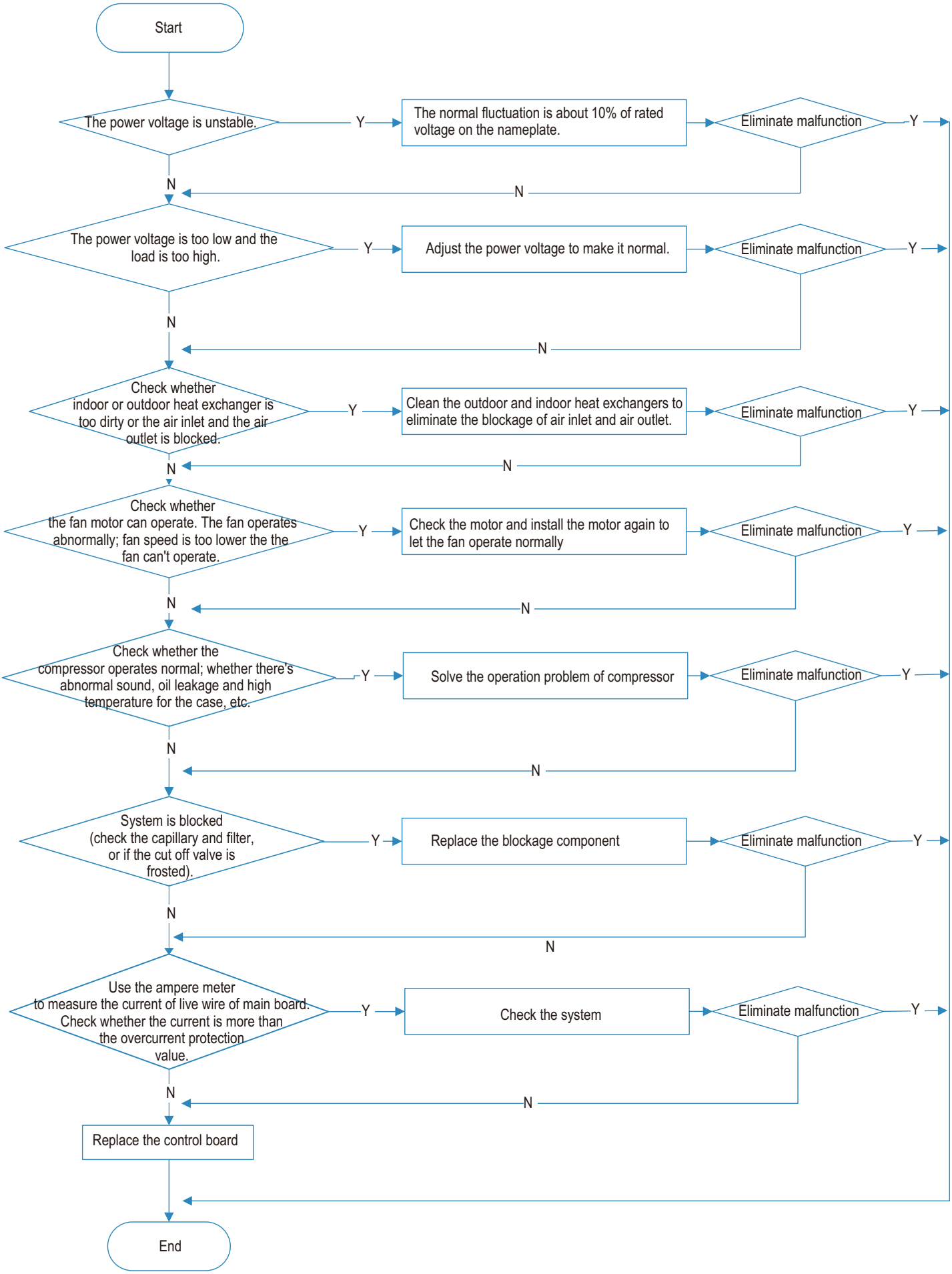

9.3 Troubleshooting for Normal Malfunction

1. Air Conditioner can't be Started Up

Possible Causes	Discriminating Method (Air conditioner Status)	Troubleshooting
No power supply, or poor connection for power plug	After energization, operation indicator isn't bright and the buzzer can't give out sound	Confirm whether it's due to power failure. If yes, wait for power recovery. If not, check power supply circuit and make sure the power plug is connected well.
Wrong wire connection between indoor unit and outdoor unit, or poor connection for wiring terminals	Under normal power supply circumstances, operation indicator isn't bright after energization	Check the circuit according to circuit diagram and connect wires correctly. Make sure all wiring terminals are connected firmly
Electric leakage for air conditioner	After energization, room circuit breaker trips off at once	Make sure the air conditioner is grounded reliably Make sure wires of air conditioner is connected correctly Check the wiring inside air conditioner. Check whether the insulation layer of power supply cord is damaged; if yes, place the power supply cord.
Model selection for air switch is improper	After energization, air switch trips off	Select proper air switch

2. Poor Cooling (Heating) for Air Conditioner

Possible Causes	Discriminating Method (Air conditioner Status)	Troubleshooting
Set temperature is improper	Observe the set temperature on remote controller	Adjust the set temperature
Rotation speed of the IDU fan motor is set too low	Small wind blow	Set the fan speed at high or medium
Filter of indoor unit is blocked	Check the filter to see its blocked	Clean the filter
Installation position for indoor unit and outdoor unit is improper	Check whether the installation postion is proper according to installation requirement for air conditioner	Adjust the installation position, and install the rainproof and sunproof for outdoor unit
Refrigerant is leaking	Discharged air temperature during cooling is higher than normal discharged wind temperature; Discharged air temperature during heating is lower than normal discharged wind temperature; Units pressure is much lower than regulated range	Find out the leakage causes and deal with it. Add refrigerant.
Malfunction of 4-way valve	Blow cold wind during heating	Replace the 4-way valve
Malfunction of capillary	Discharged air temperature during cooling is higher than normal discharged wind temperature; Discharged air temperature during heating is lower than normal discharged wind temperature; Unitt pressure is much lower than regulated range. If refrigerant isn't leaking, part of capillary is blocked	Replace the capillary
Flow volume of valve is insufficient	The pressure of valves is much lower than that stated in the specification	Open the valve completely
Malfunction of horizontal louver	Horizontal louver can't swing	Refer to point 3 of maintenance method for details
Malfunction of the IDU fan motor	The IDU fan motor can't operate	Refer to troubleshooting for H6 for maintenance method in details
Malfunction of the ODU fan motor	The ODU fan motor can't operate	Refer to point 4 of maintenance method for details
Malfunction of compressor	Compressor can't operate	Refer to point 5 of maintenance method for details

3. Horizontal Louver can't Swing

Possible Causes	Discriminating Method (Air conditioner Status)	Troubleshooting
Wrong wire connection, or poor connection	Check the wiring status according to circuit diagram	Connect wires according to wiring diagram to make sure all wiring terminals are connected firmly
Stepping motor is damaged	Stepping motor can't operate	Repair or replace stepping motor
Main board is damaged	Others are all normal, while horizontal louver can't operate	Replace the main board with the same model

4. ODU Fan Motor can't Operate

Possible causes	Discriminating method (air conditioner status)	Troubleshooting
Wrong wire connection, or poor connection	Check the wiring status according to circuit diagram	Connect wires according to wiring diagram to make sure all wiring terminals are connected firmly
Capacity of the ODU fan motor is damaged	Measure the capacity of fan capacitor with an universal meter and find that the capacity is out of the deviation range indicated on the nameplate of fan capacitor.	Replace the capacity of fan
Power voltage is a little low or high	Use universal meter to measure the power supply voltage. The voltage is a little high or low	Suggest to equip with voltage regulator
Motor of outdoor unit is damaged	When unit is on, cooling/heating performance is bad and ODU compressor generates a lot of noise and heat.	Change compressor oil and refrigerant. If no better, replace the compressor with a new one

5. Compressor can't Operate

Possible causes	Discriminating method (air conditioner status)	Troubleshooting
Wrong wire connection, or poor connection	Check the wiring status according to circuit diagram	Connect wires according to wiring diagram to make sure all wiring terminals are connected firmly
Capacity of compressor is damaged	Measure the capacity of fan capacitor with an universal meter and find that the capacity is out of the deviation range indicated on the nameplate of fan capacitor.	Replace the compressor capacitor
Power voltage is a little low or high	Use universal meter to measure the power supply voltage. The voltage is a little high or low	Suggest to equip with voltage regulator
Coil of compressor is burnt out	Use universal meter to measure the resistance between compressor terminals and it's 0	Repair or replace compressor
Cylinder of compressor is blocked	Compressor can't operate	Repair or replace compressor

6. Air Conditioner is Leaking

Possible causes	Discriminating method (air conditioner status)	Troubleshooting
Drain pipe is blocked	Water leaking from indoor unit	Eliminate the foreign objects inside the drain pipe
Drain pipe is broken	Water leaking from drain pipe	Replace drain pipe
Wrapping is not tight	Water leaking from the pipe connection place of indoor unit	Wrap it again and bundle it tightly

7. Abnormal Sound and Vibration

Possible causes	Discriminating method (air conditioner status)	Troubleshooting
When turn on or turn off the unit, the panel and other parts will expand and there's abnormal sound	There's the sound of "PAPA"	Normal phenomenon. Abnormal sound will disappear after a few minutes.
When turn on or turn off the unit, there's abnormal sound due to flow of refrigerant inside air conditioner	Water-running sound can be heard	Normal phenomenon. Abnormal sound will disappear after a few minutes.
Foreign objects inside the indoor unit or there're parts touching together inside the indoor unit	There's abnormal sound fro indoor unit	Remove foreign objects. Adjust all parts position of indoor unit, tighten screws and stick damping plaster between connected parts
Foreign objects inside the outdoor unit or there're parts touching together inside the outdoor unit	There's abnormal sound fro outdoor unit	Remove foreign objects. Adjust all parts position of outdoor unit, tighten screws and stick damping plaster between connected parts
Short circuit inside the magnetic coil	During heating, the way valve has abnormal electromagnetic sound	Replace magnetic coil
Abnormal shake of compressor	Outdoor unit gives out abnormal sound	Adjust the support foot mat of compressor, tighten the bolts
Abnormal sound inside the compressor	Abnormal sound inside the compressor	If add too much refrigerant during maintenance, please reduce refrigerant properly. Replace compressor for other circumstances.

10. Removal Procedure

Note: Take EMUL18HPJ132OA for example.

Warning: Be sure to wait for a minimum of 20 minutes after turning off all power supplies and discharge the refrigerant completely before removal.

Step	Procedure
1. Before disassembly	
Complete axonometric drawing.	
2. Remove valve cover	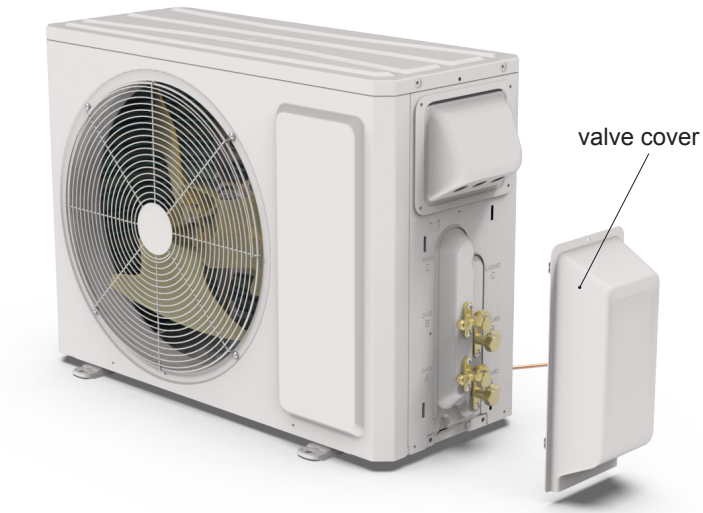
Remove the connection screw fixing the valve cover and then remove the valve cover.	
3. Remove handle	
Remove the connection screws fixing the handle and the right side plate, and then remove the handle.	

Step	Procedure
4. Remove top panel	
Remove the connection screws connecting the top panel and the front panel, and then remove the top panel.	
5. Remove front grille	
Remove the connection screws connecting the front grille and the front panel, and then loosen the clasp to remove the front grille.	
6. Remove front panel	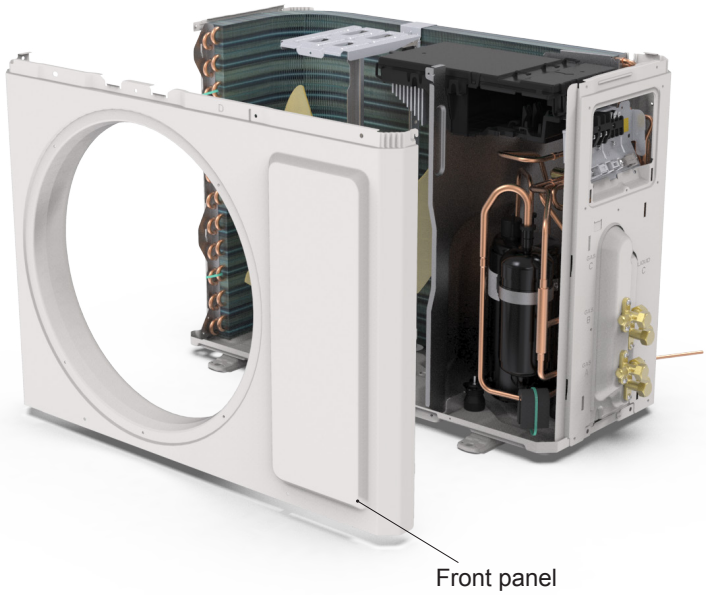
Remove the screws connecting the front panel and then remove the front panel.	

Step	Procedure
7. Remove right side plate	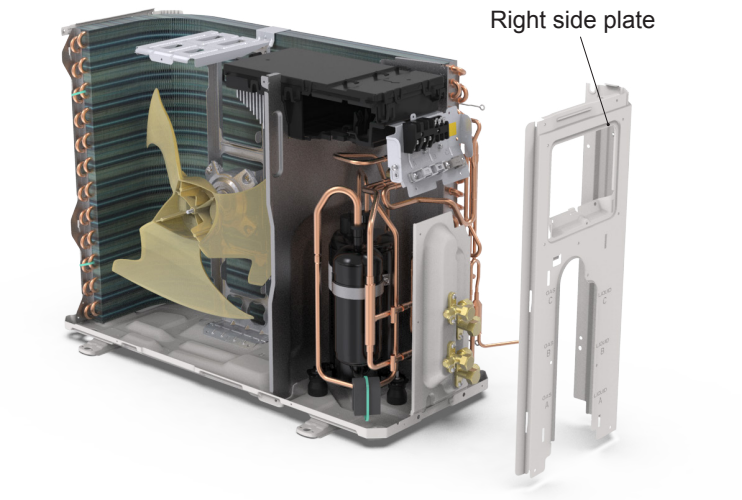
Remove the screws connecting the right side plate with the chassis and the valve support. Then remove the right side plate.	
8. Remove rear grill	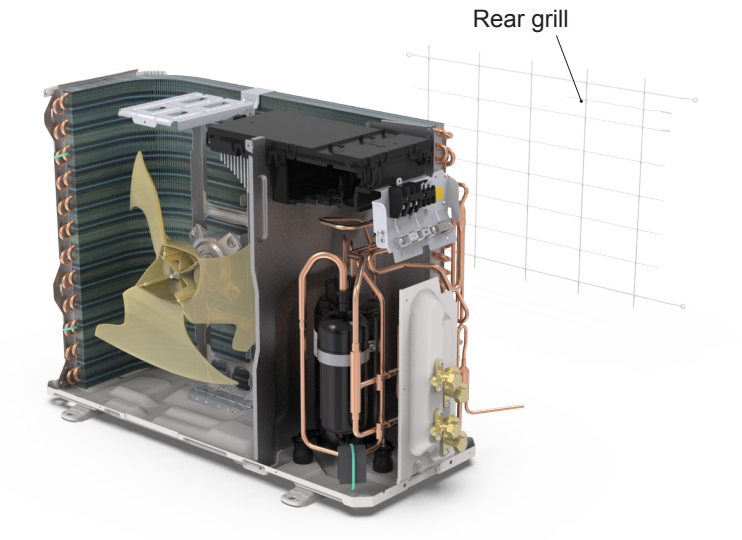
Remove the screws connecting the rear grill and left side plate, and then remove the rear grill.	
9. Remove left side plate	
Remove the screws fixing the left side plate with the chassis and the condenser support, and then remove the left side plate.	

Step	Procedure
10. Remove axial flow blade	
	Remove the nut on the blade and then remove the axial flow blade.
	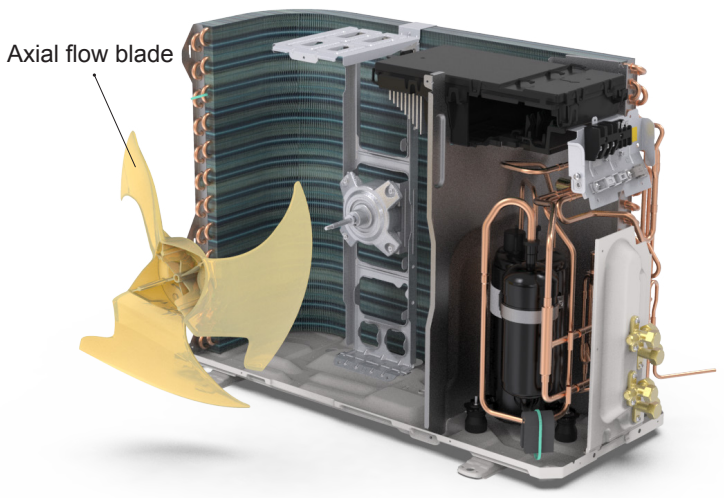
11. Remove motor and motor support	
	Remove the 4 tapping screws fixing the motor and disconnect the leading wire insert of the motor. Then remove the motor. Remove the 2 tapping screws fixing the motor support and chassis, and then lift the motor support to remove it.
	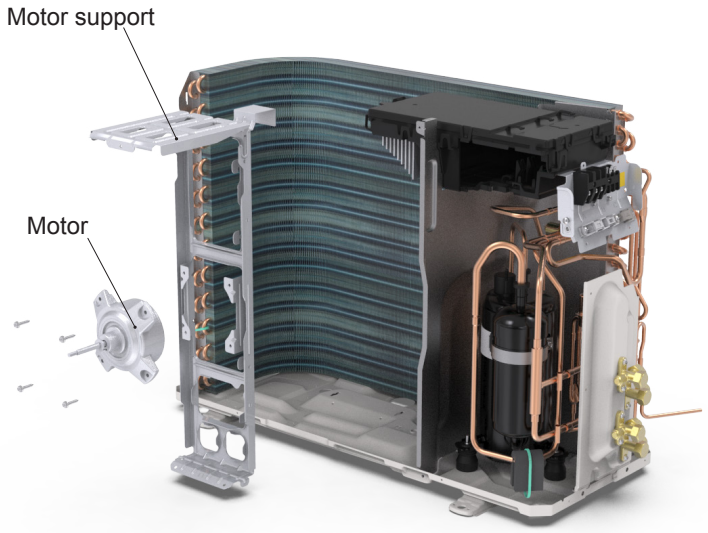
12. Remove electric box assy	
	Remove the screws fixing the electric box assy and the middle isolation sheet, loosen the wire bundle, unplug the wiring terminals, and then lift the electric box assy to remove it.
	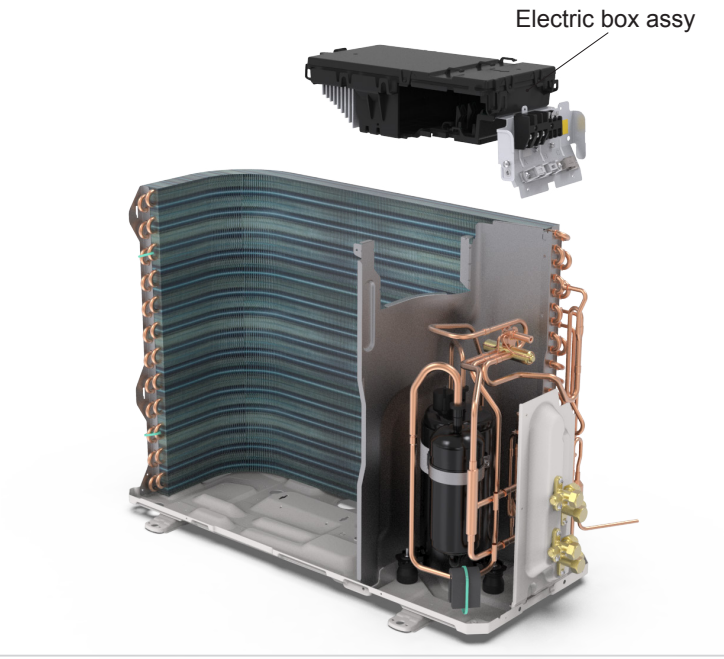

Step	Procedure
13. Remove 4-way valve assy	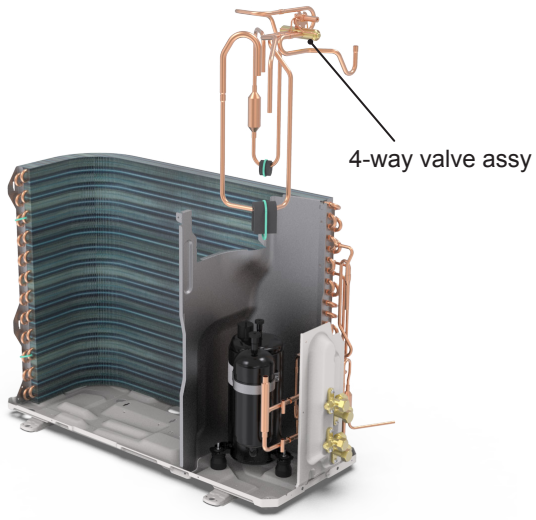
Unsolder the welding joint connecting the 4-way valve assy with the cut-off valve and the condenser connection pipe, and then remove the 4-way valve assy.	
14. Remove valve support sub-assy and expansion valve assy	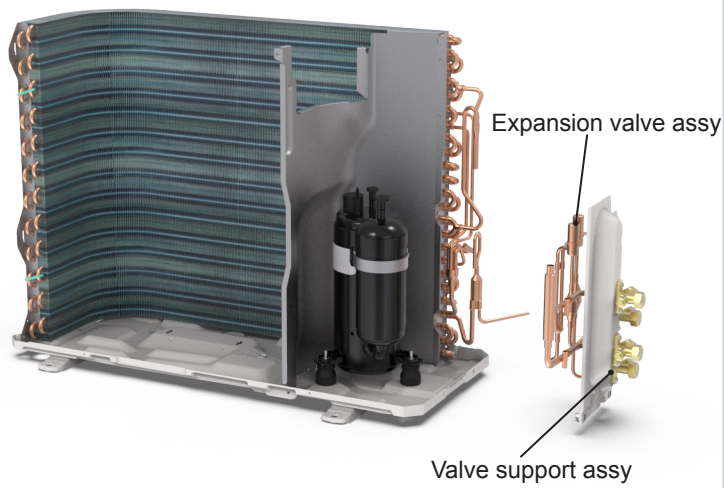
Remove the screw connecting the valve support and the chassis, and then remove the valve support assy. Unsolder the welding joint connecting the electronic expansion valve assy with the cut-off valve and the condenser connection pipe, and then remove the e xpansion valve assy.	
15. Remove middle isolation sheet	
Remove the screws connecting the middle isolation sheet with the chassis assy and the condenser assy, and then remove the middle isolation sheet.	

Step	Procedure
16. Remove compressor	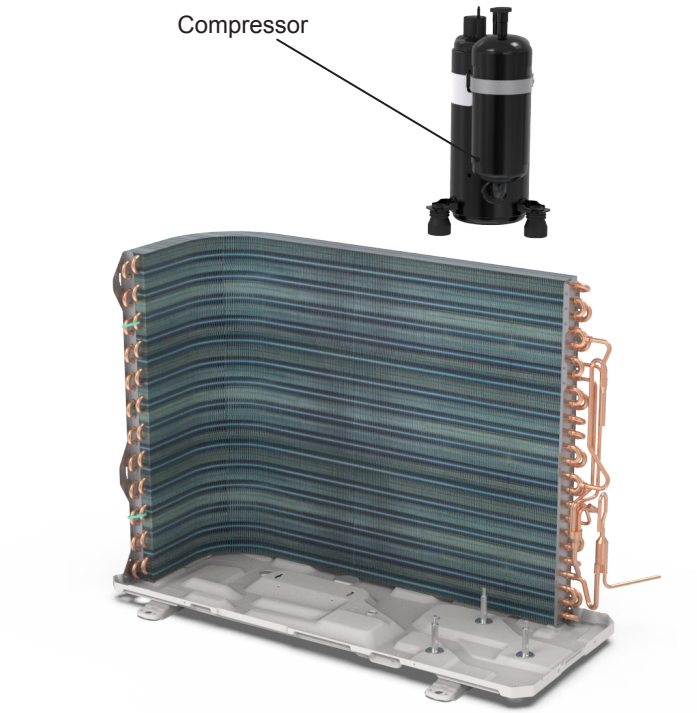
Remove the 3 foot nuts fixing the compressor and then remove the compressor.	
17. Remove condenser assy	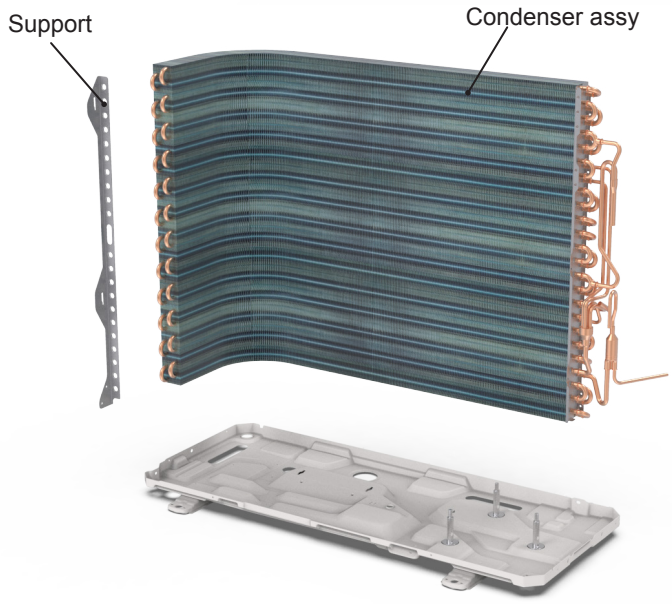
Remove the screws fixing the condenser support and then remove the condenser support. Remove the screws connecting the condenser support and the chassis assy, and then remove the condenser assy.	

Warning: Be sure to wait for a minimum of 20 minutes after turning off all power supplies and discharge the refrigerant completely before removal.

Note: Take EMUL24&30HPJ132OA for example.

Step	Procedure
1. Before disassembly	
Complete axonometric drawing.	
2. Remove valve cover	
Remove the connection screw fixing the valve cover and then remove the valve cover.	
3. Remove handle	
Remove the connection screws fixing the handle and the right side plate, and then remove the handle.	

Step	Procedure
4. Remove top panel	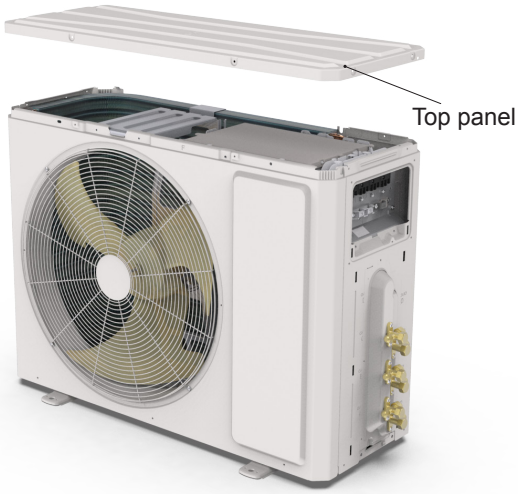
Remove the connection screws connecting the top panel and the front panel, and then remove the top panel.	
5. Remove front grille	
Remove the connection screws connecting the front grille and the front panel, and then loosen the clasp to remove the front grille.	
6. Remove front panel	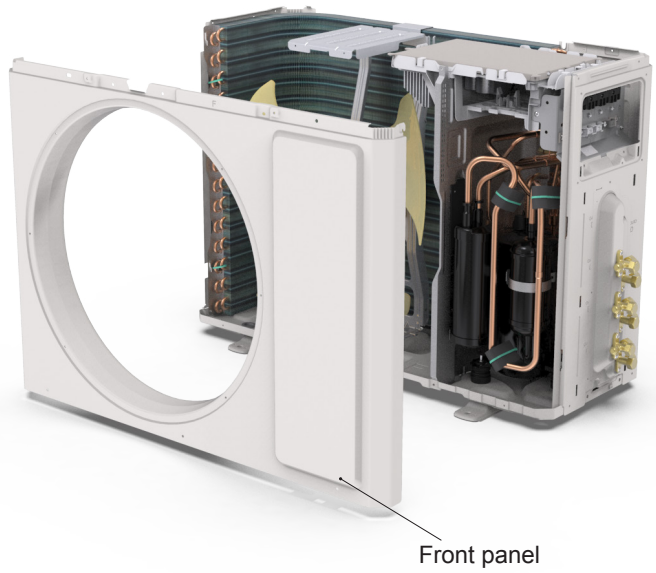
Remove the screws connecting the front panel and then remove the front panel.	

Step	Procedure
7. Remove right side plate	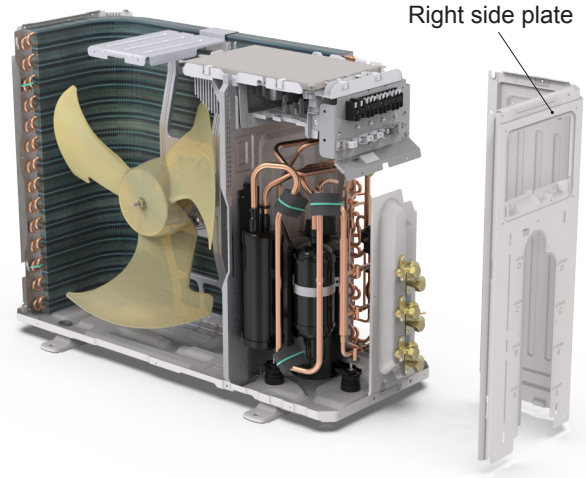
Remove the screws connecting the right side plate with the chassis and the valve support. Then remove the right side plate.	
8. Remove rear grill	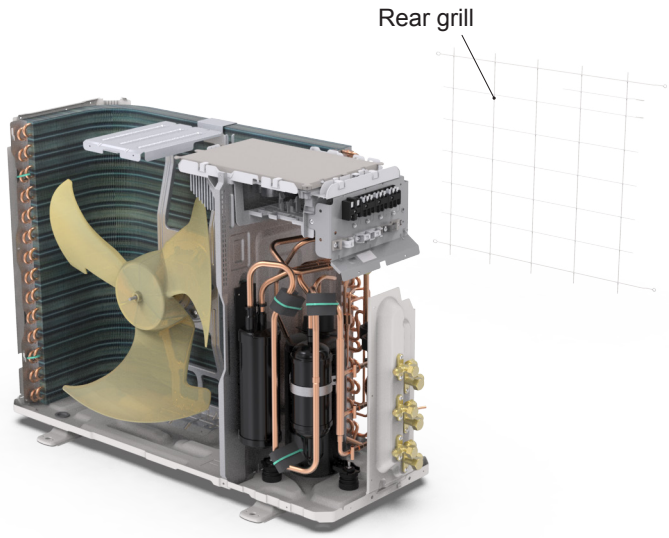
Remove the screws connecting the rear grill and left side plate, and then remove the rear grill.	
9. Remove left side plate	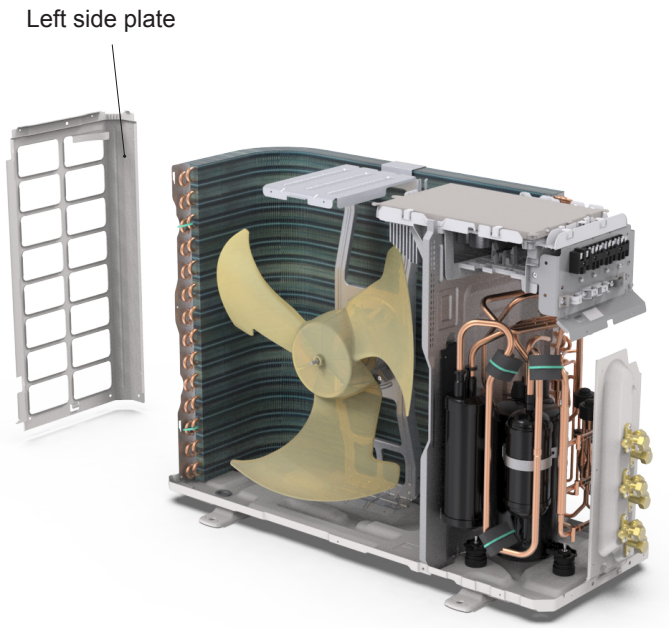
Remove the screws fixing the left side plate with the chassis and the condenser support, and then remove the left side plate.	

Step	Procedure
10. Remove axial flow blade	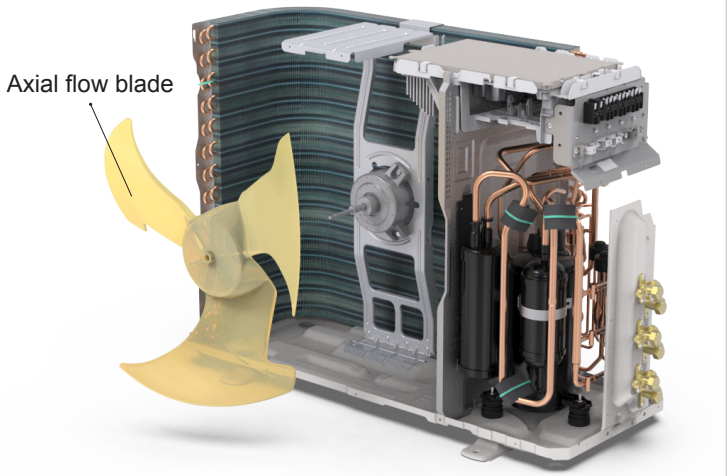
Remove the nut on the blade and then remove the axial flow blade.	
11. Remove motor and motor support	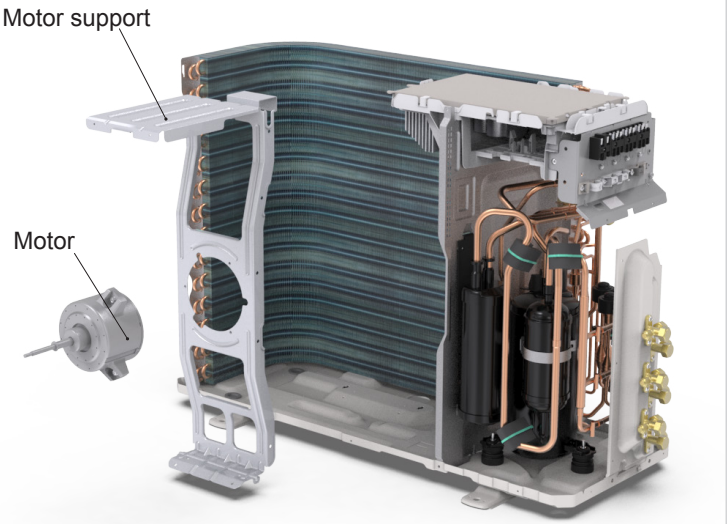
Remove the 4 tapping screws fixing the motor and disconnect the leading wire insert of the motor. Then remove the motor. Remove the 2 tapping screws fixing the motor support and chassis, and then lift the motor support to remove it.	
12. Remove electric box assy	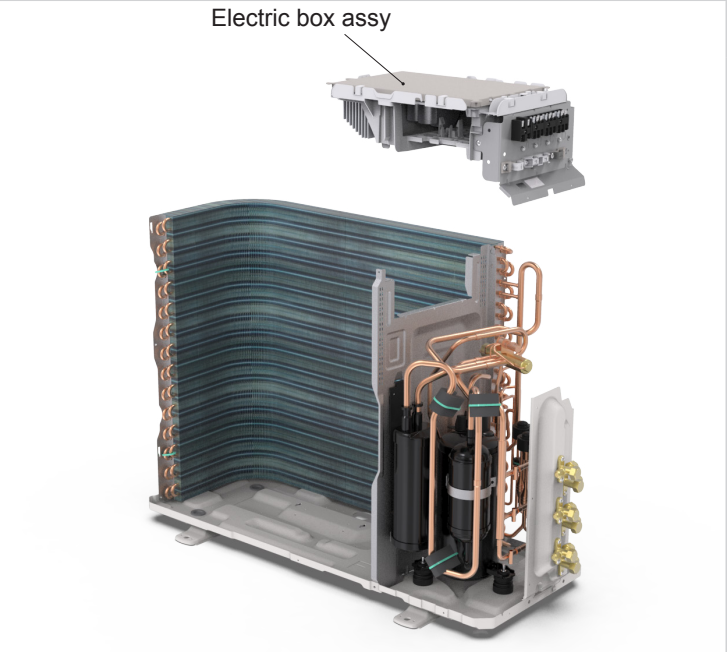
Remove the screws fixing the electric box assy and the middle isolation sheet, loosen the wire bundle, unplug the wiring terminals, and then lift the electric box assy to remove it.	

Step	Procedure
13. Remove 4-way valve assy	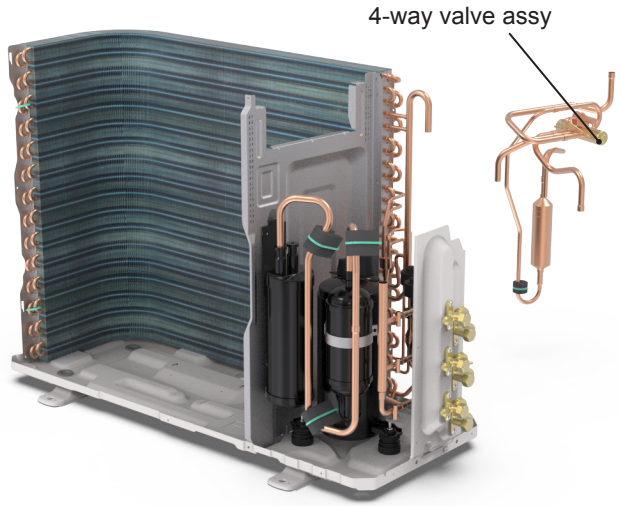
Unsolder the welding joint connecting the 4-way valve assy with the cut-off valve and the condenser connection pipe, and then remove the 4-way valve assy.	
14. Remove valve support sub-assy and expansion valve assy	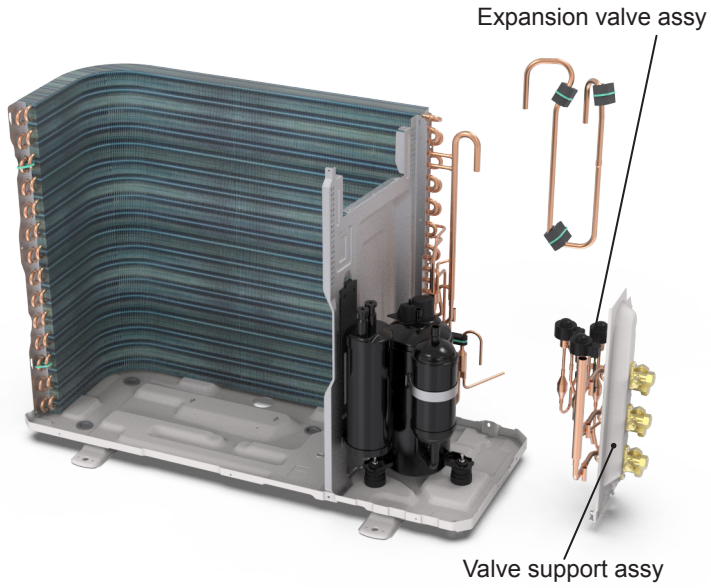
Remove the screw connecting the valve support and the chassis, and then remove the valve support assy. Unsolder the welding joint connecting the electronic expansion valve assy with the cut-off valve and the condenser connection pipe, and then remove the e xpansion valve assy.	
15. Remove middle isolation sheet	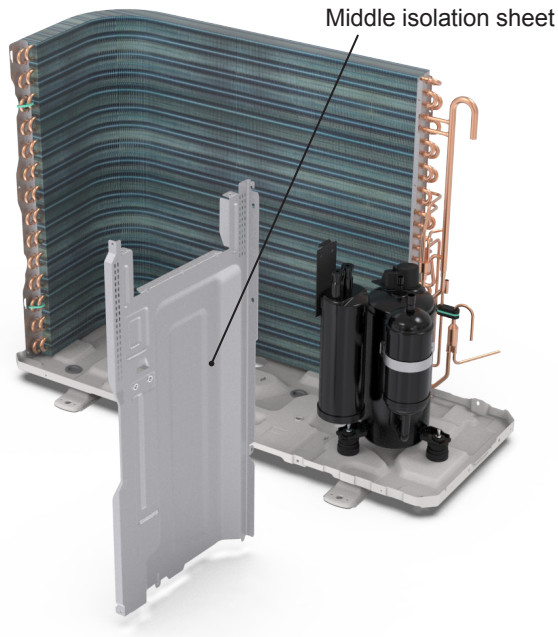
Remove the screws connecting the middle isolation sheet with the chassis assy and the condenser assy, and then remove the middle isolation sheet.	

Step	Procedure
16. Remove compressor	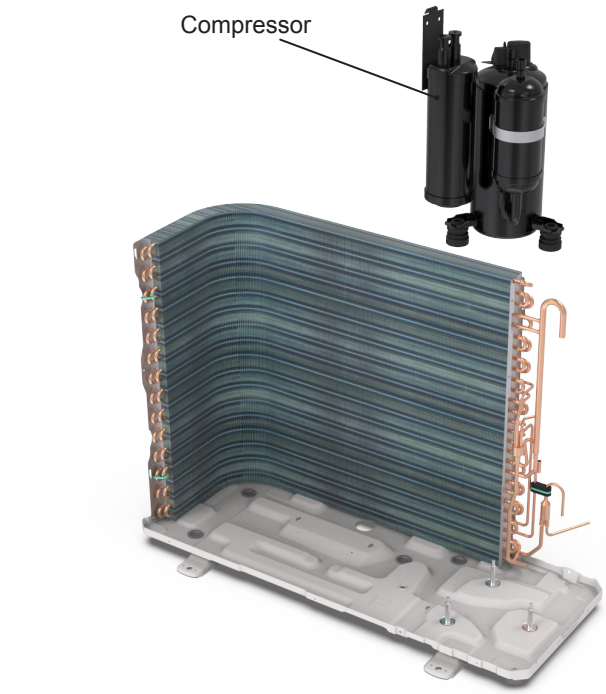
Remove the 3 foot nuts fixing the compressor and then remove the compressor.	
17. Remove condenser assy	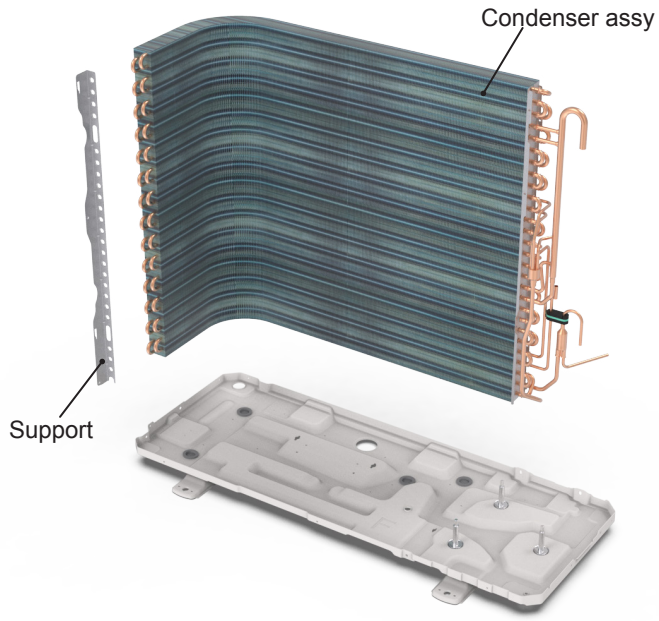
Remove the screws fixing the condenser support and then remove the condenser support. Remove the screws connecting the condenser support and the chassis assy, and then remove the condenser assy.	

Warning: Be sure to wait for a minimum of 20 minutes after turning off all power supplies and discharge the refrigerant completely before removal.

Step	Procedure
1. Before disassembly	
Complete axonometric drawing.	
2. Remove valve cover	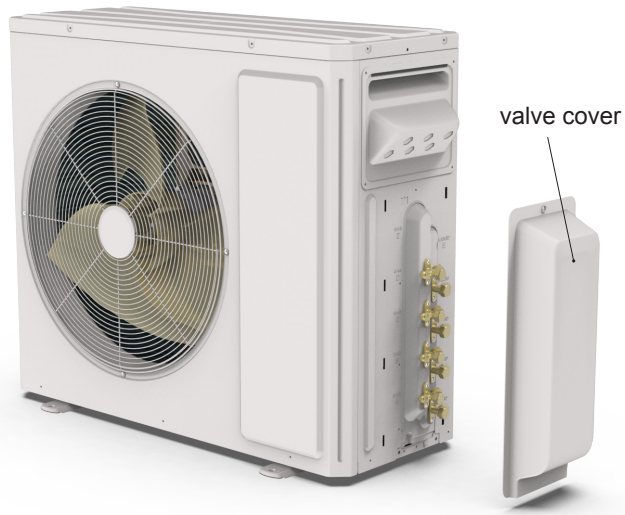
Remove the connection screw fixing the valve cover and then remove the valve cover.	
3. Remove handle	
Remove the connection screws fixing the handle and the right side plate, and then remove the handle.	

Step	Procedure
4. Remove top panel	
Remove the connection screws connecting the top panel and the front panel, and then remove the top panel.	
5. Remove front grille	
Remove the connection screws connecting the front grille and the front panel, and then loosen the clasp to remove the front grille.	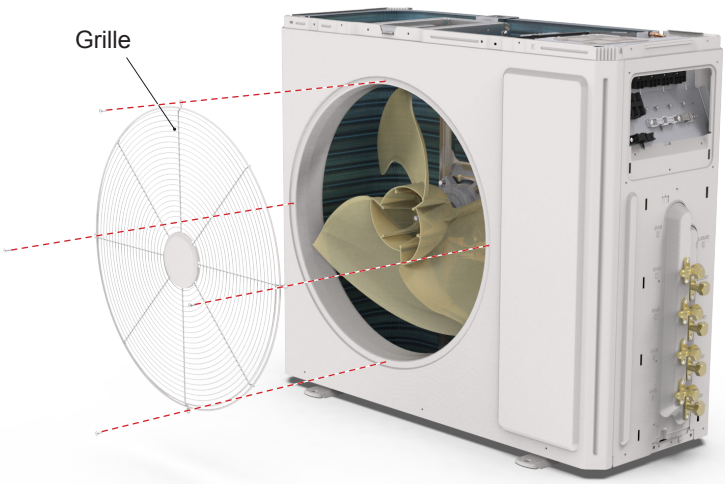
6. Remove front panel	
Remove the screws connecting the front panel and then remove the front panel.	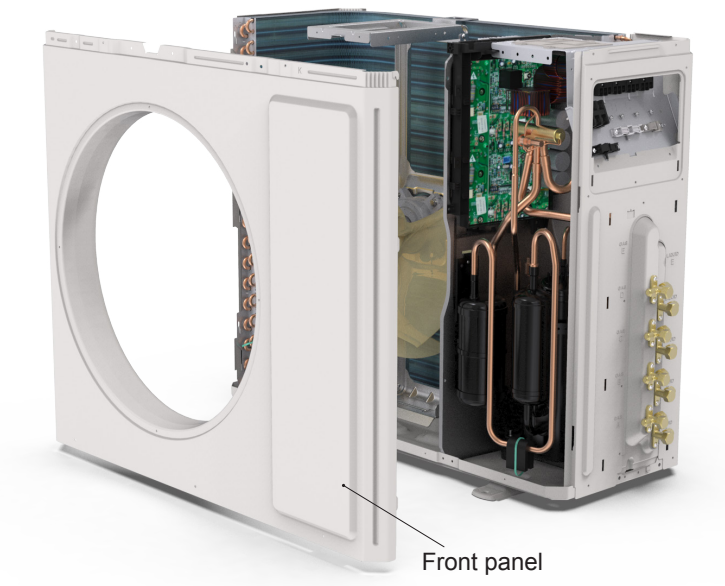

Step	Procedure
7. Remove rear grill	
	Remove the screws connecting the rear grill and left side plate, and then remove the rear grill.
	
8. Remove right side plate	
	Remove the screws connecting the right side plate with the chassis and the valve support. Then remove the right side plate.
	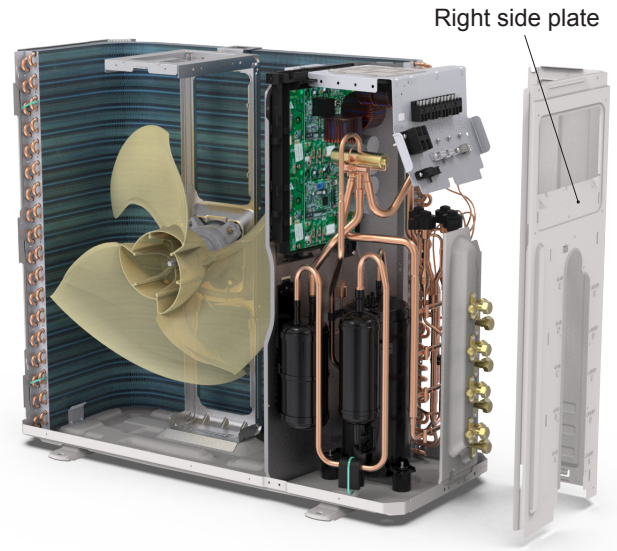
9. Remove left side plate	
	Remove the screws fixing the left side plate with the chassis and the condenser support, and then remove the left side plate.
	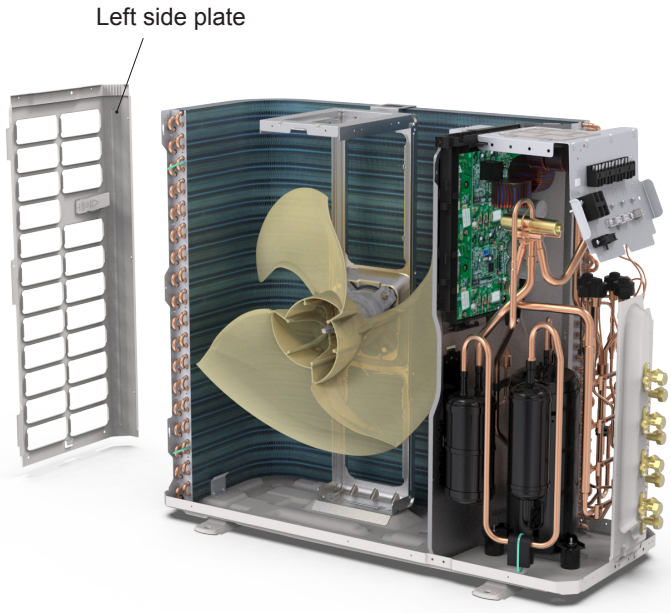

Step	Procedure
10. Remove axial flow blade	
Remove the nut on the blade and then remove the axial flow blade.	
11. Remove motor and motor support	
Remove the 4 tapping screws fixing the motor and disconnect the leading wire insert of the motor. Then remove the motor. Remove the 2 tapping screws fixing the motor support and chassis, and then lift the motor support to remove it.	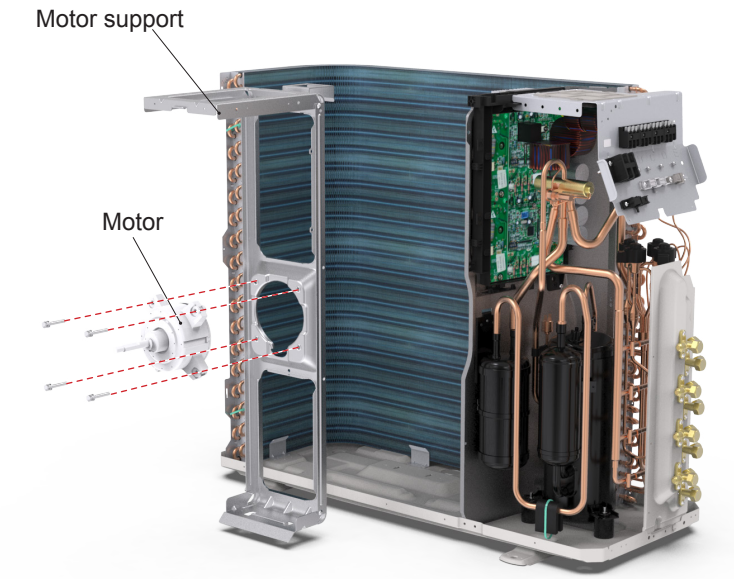
12. Remove electric box assy	
Remove the screws fixing the electric box assy and the middle isolation sheet, loosen the wire bundle, unplug the wiring terminals, and then lift the electric box assy to remove it.	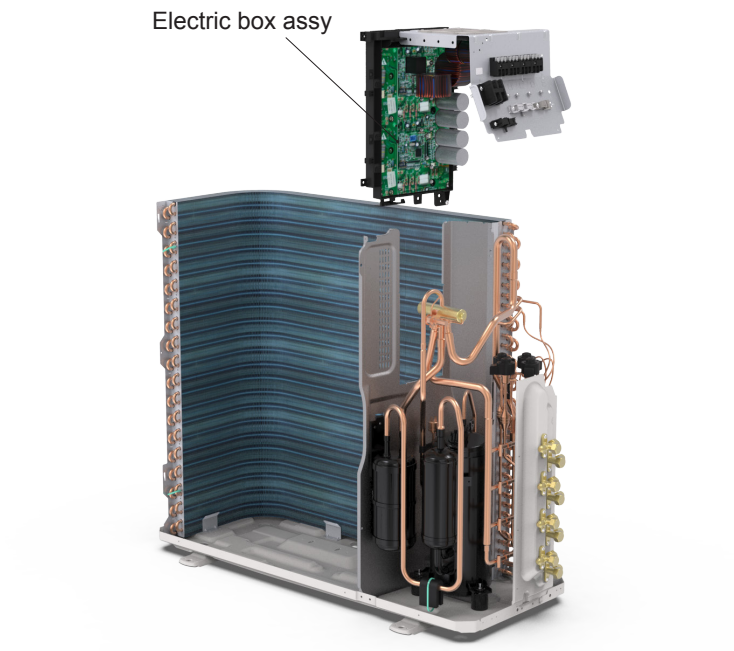

Step	Procedure
13. Remove 4-way valve assy	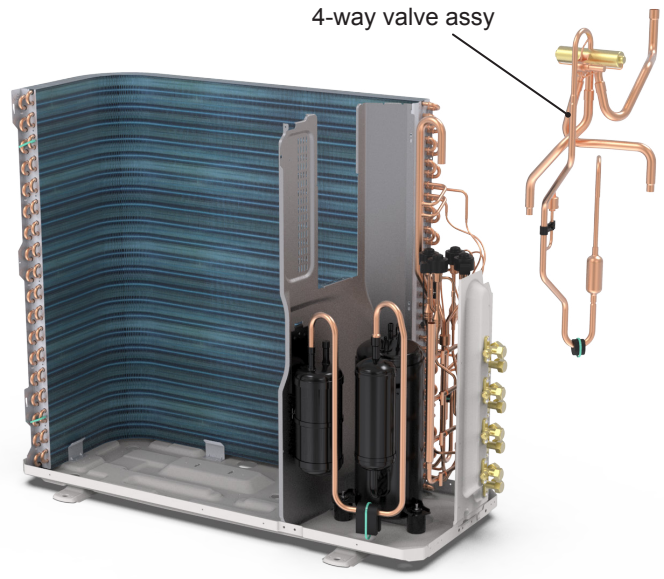
Remove screws fixing the electricbox; loosen the wire bundle; pull out the wiring terminals and then pull electric box upwards to remove it.	
14. Remove valve support sub-assy and expansion valve assy	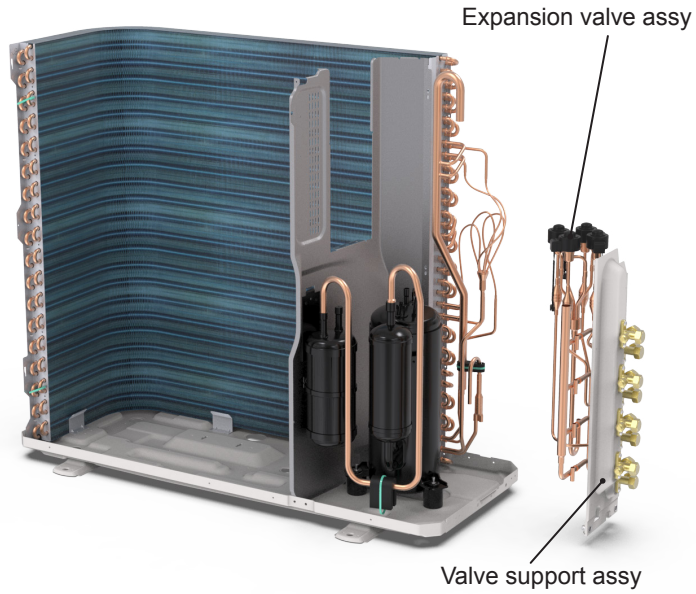
Remove the screw connecting the valve support and the chassis, and then remove the valve support assy. Unsolder the welding joint connecting the electronic expansion valve assy with the cut-off valve and the condenser connection pipe, and then remove the e xpansion valve assy.	
15. Remove Inhalation Tube Sub-assy	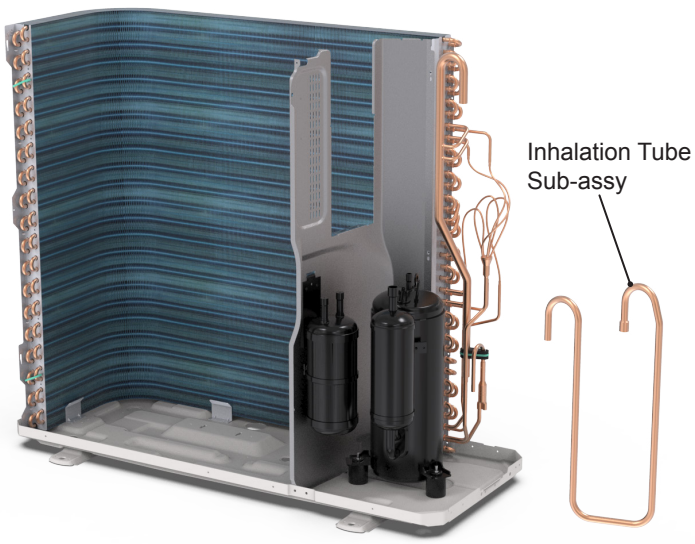
Remove all spot welds connected with Inhalation Tube, and then remove the clnhalation Tube Sub-assy.	

Step	Procedure
16. Remove compressor	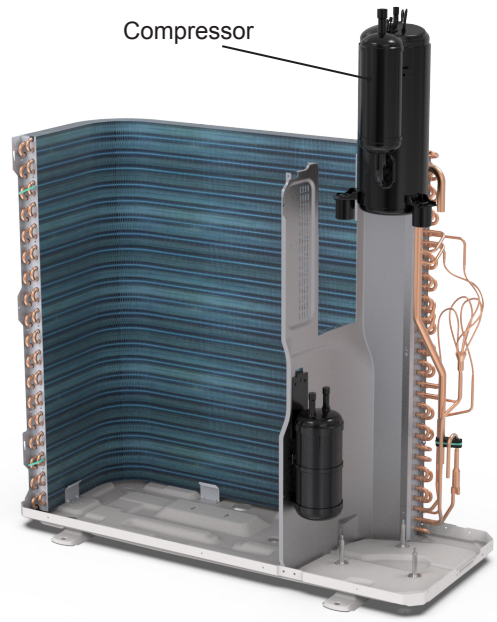
Remove the 3 foot nuts fixing the compressor and then remove the compressor.	
17. Remove vapour liquid separator	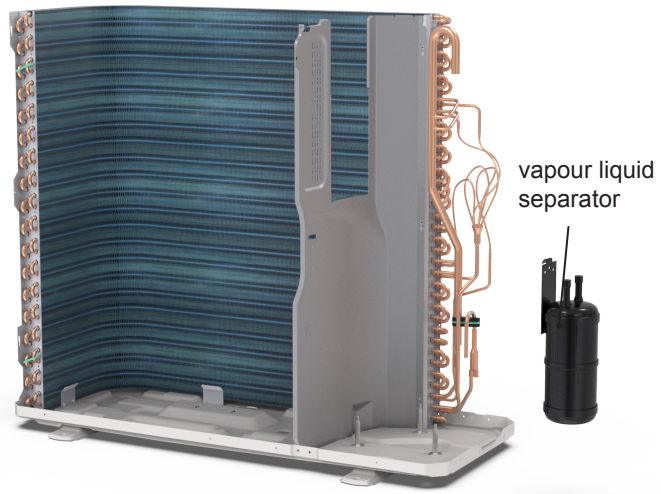
Remove the screw connecting the vapour liquid separator, then remove the vapour liquid separator.	
18. Remove middle isolation sheet	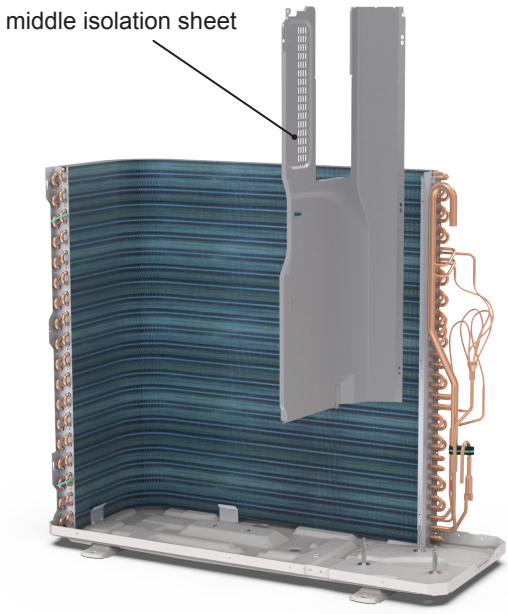
Remove the screws connecting the middle isolation sheet with the chassis assy and the condenser assy, and then remove the middle isolation sheet.	

Step	Procedure
20. Remove condenser assy	
	Remove the screws fixing the condenser support and then remove the condenser support. Remove the screws connecting the condenser support and the chassis assy, and then remove the condenser assy.

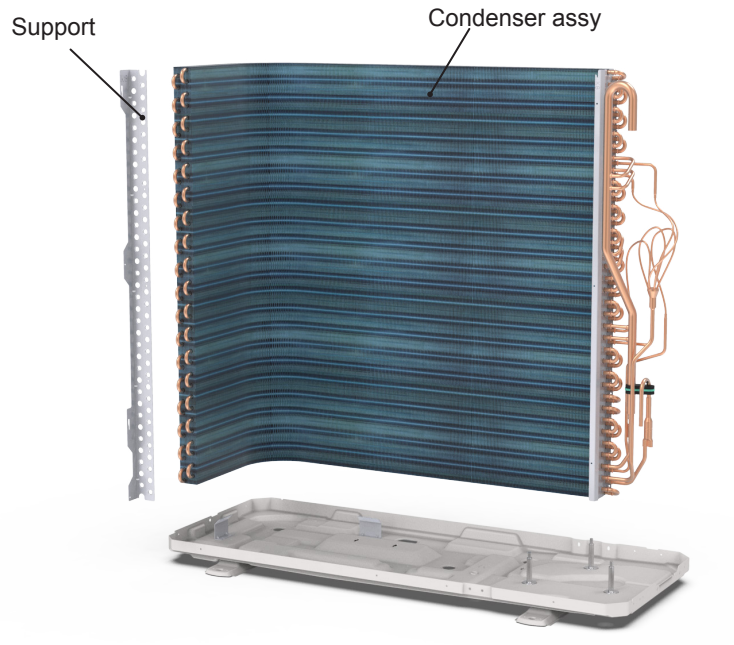

Warning: Be sure to wait for a minimum of 20 minutes after turning off all power supplies and discharge the refrigerant completely before removal.

Step	Procedure
1. Before disassembly	
Complete axonometric drawing.	
2. Remove handle	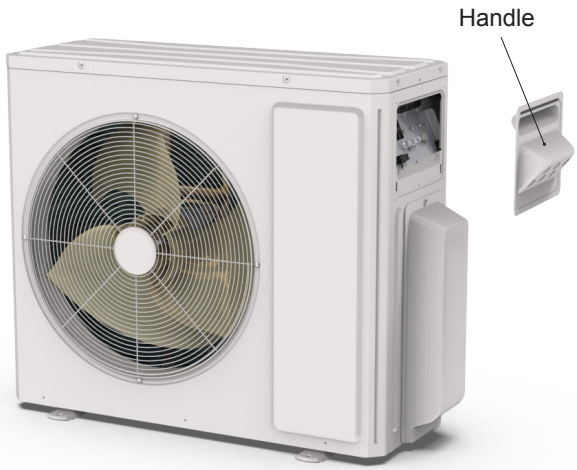
Remove the connection screws fixing the handle and the right side plate, and then remove the handle.	
3. Remove valve cover	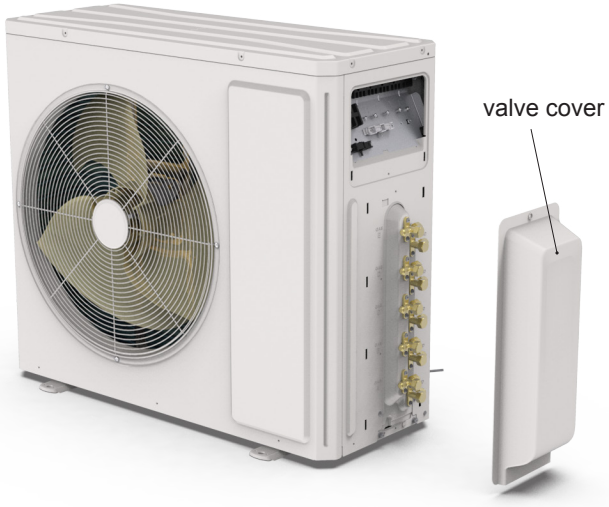
Remove the connection screw fixing the valve cover and then remove the valve cover.	

Step	Procedure
4. Remove top panel	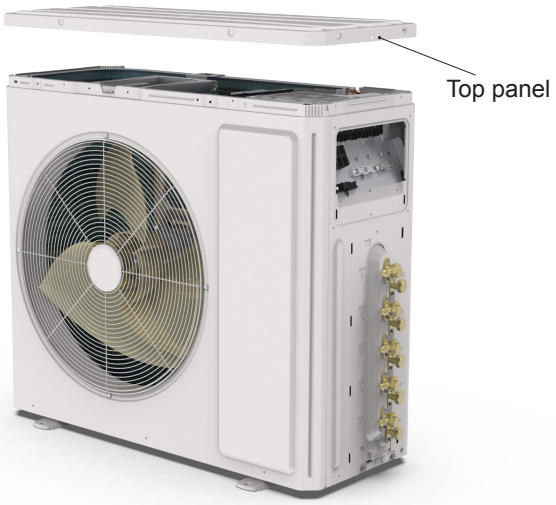
Remove the connection screws connecting the top panel and the front panel, and then remove the top panel.	
5. Remove front grille	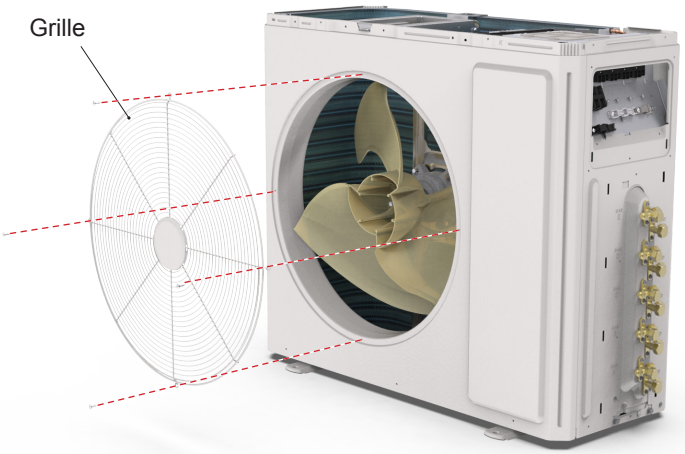
Remove the connection screws connecting the front grille and the front panel, and then loosen the clasp to remove the front grille.	
6. Remove front panel	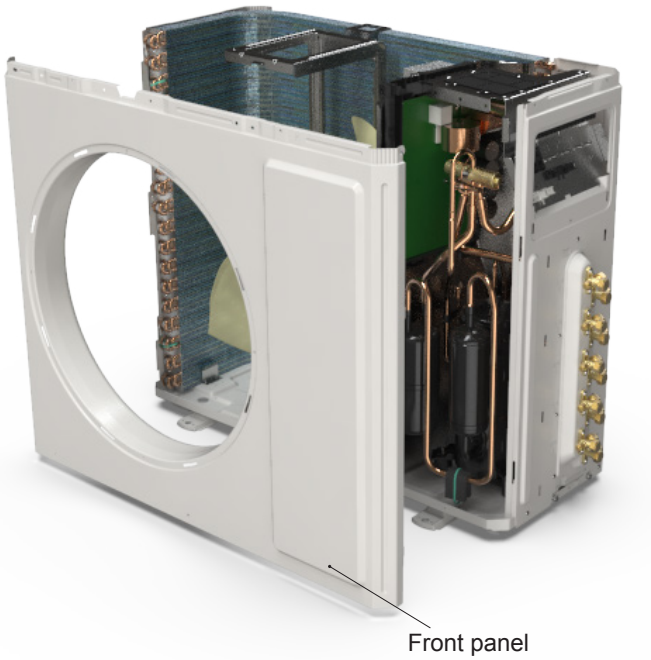
Remove the screws connecting the front panel and then remove the front panel.	

Step	Procedure
7. Remove right side plate	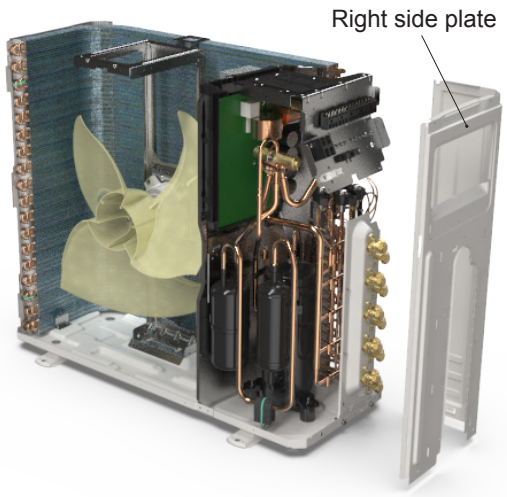
Remove the screws connecting the right side plate with the chassis and the valve support. Then remove the right side plate.	
8. Remove rear grill	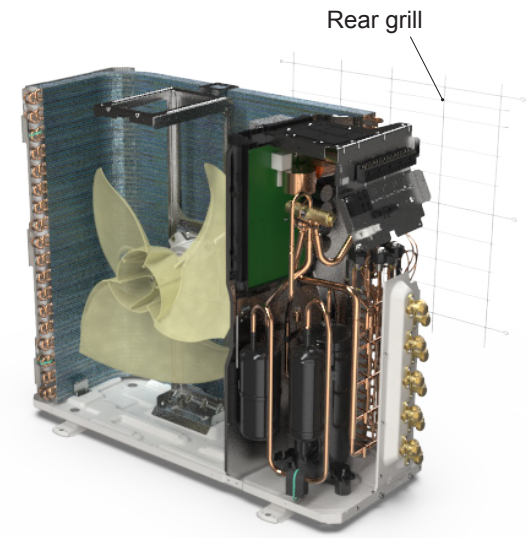
Remove the screws connecting the rear grill and left side plate, and then remove the rear grill.	
9. Remove left side plate	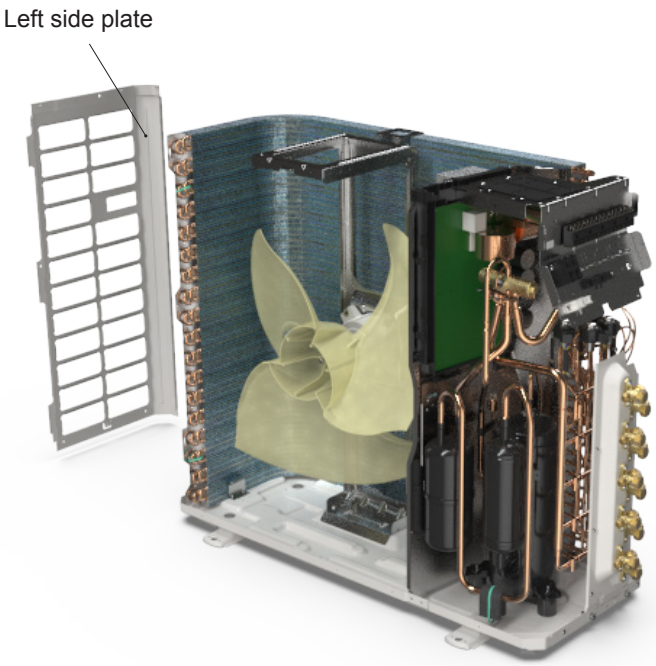
Remove the screws fixing the left side plate with the chassis and the condenser support, and then remove the left side plate.	

Step	Procedure
10. Remove axial flow blade	
	Remove the nut on the blade and then remove the axial flow blade.
	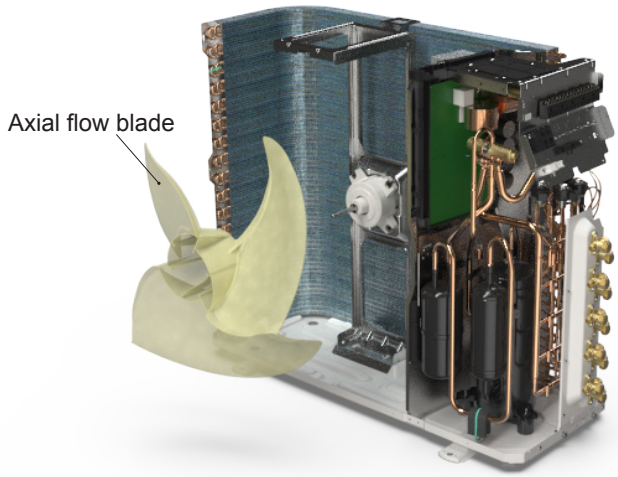
11. Remove motor and motor support	
	Remove the 4 tapping screws fixing the motor and disconnect the leading wire insert of the motor. Then remove the motor. Remove the 2 tapping screws fixing the motor support and chassis, and then lift the motor support to remove it.
	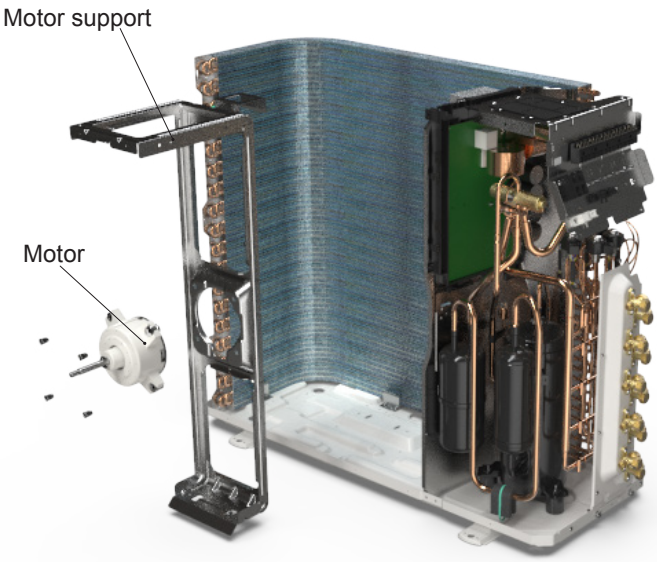
12. Remove electric box assy	
	Remove the screws fixing the electric box assy and the middle isolation sheet, loosen the wire bundle, unplug the wiring terminals, and then lift the electric box assy to remove it.
	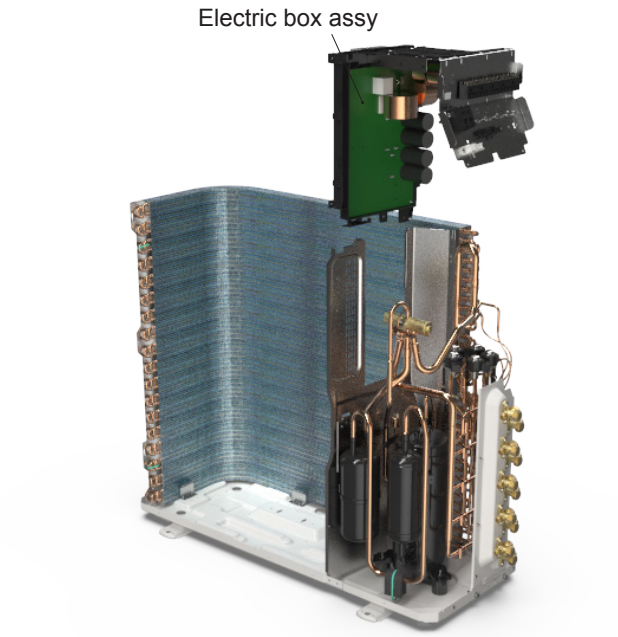

Step	Procedure
13. Remove 4-way valve assy	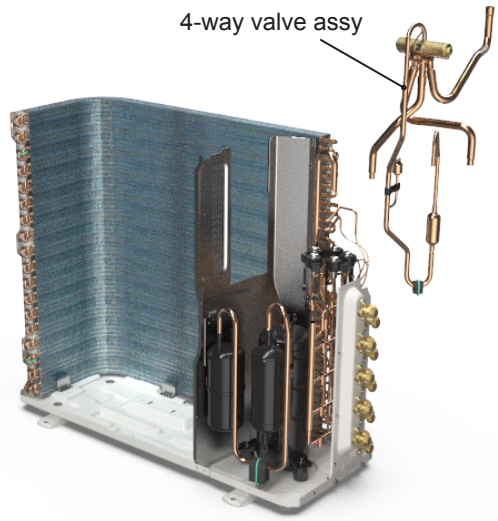
Remove screws fixing the electricbox; loosen the wire bundle; pull out the wiring terminals and then pull electric box upwards to remove it.	
14. Remove valve support sub-assy and expansion valve assy	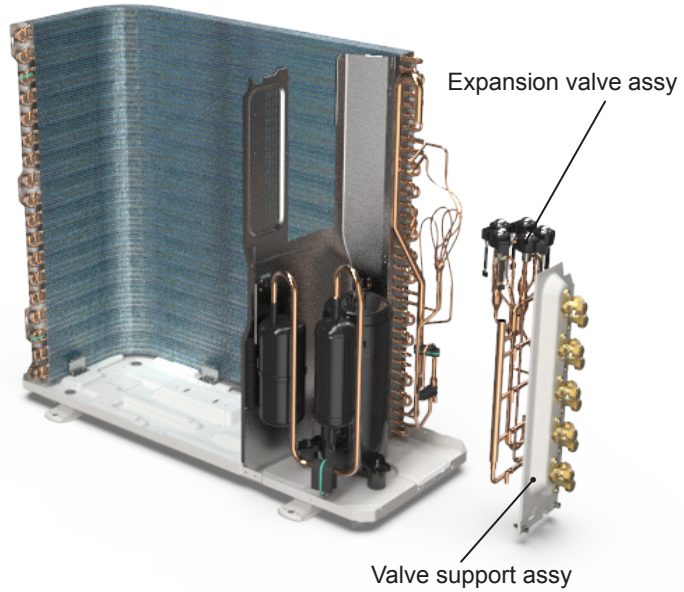
Remove the screw connecting the valve support and the chassis, and then remove the valve support assy. Unsolder the welding joint connecting the electronic expansion valve assy with the cut-off valve and the condenser connection pipe, and then remove the e xpansion valve assy.	
15. Remove middle isolation sheet	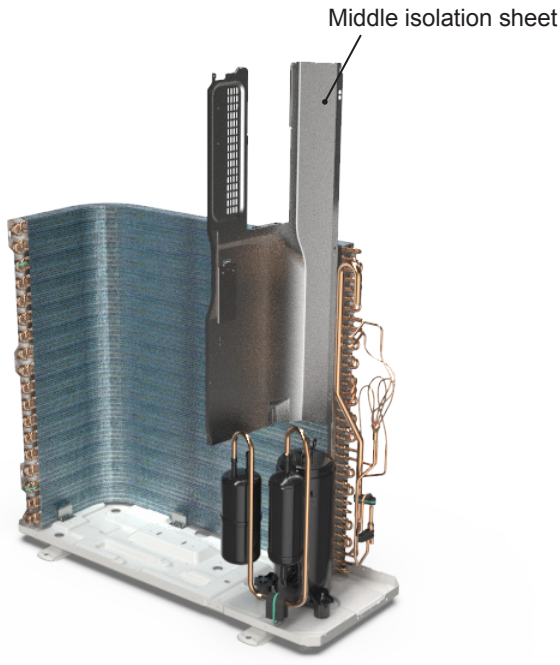
Remove the screws connecting the middle isolation sheet with the chassis assy and the condenser assy, and then remove the middle isolation sheet.	

Step	Procedure
16. Remove compressor	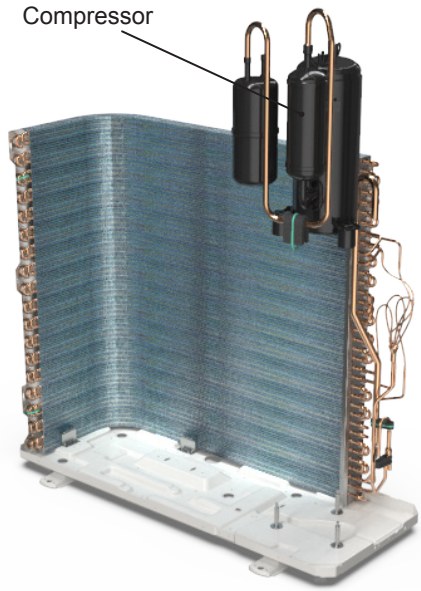
Remove the 3 foot nuts fixing the compressor and then remove the compressor.	
17. Remove condenser assy	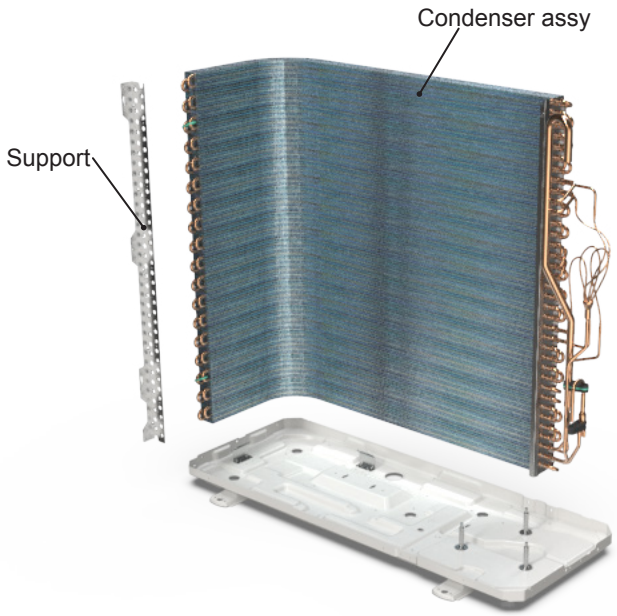
Remove the screws fixing the condenser support and then remove the condenser support. Remove the screws connecting the condenser support and the chassis assy, and then remove the condenser assy.	

Appendix 1: Reference Sheet of Celsius and Fahrenheit

Conversion formula for Fahrenheit degree and Celsius degree: Tf=Tcx1.8+32

Set temperature

Fahrenheit display temperature（˚F）	Fahrenheit（˚F）	Celsius（℃）	Fahrenheit display temperature（˚F）	Fahrenheit（˚F）	Celsius（℃）	Fahrenheit display temperature（˚F）	Fahrenheit（˚F）	Celsius（℃）
61	60.8	16	69/70	69.8	21	78/79	78.8	26
62/63	62.6	17	71/72	71.6	22	80/81	80.6	27
64/65	64.4	18	73/74	73.4	23	82/83	82.4	28
66/67	66.2	19	75/76	75.2	24	84/85	84.2	29
68	68	20	77	77	25	86	86	30

Ambient temperature

Fahrenheit display temperature（˚F）	Fahrenheit（˚F）	Celsius（℃）	Fahrenheit display temperature（˚F）	Fahrenheit（˚F）	Celsius（℃）	Fahrenheit display temperature（˚F）	Fahrenheit（˚F）	Celsius（℃）
32/33	32	0	55/56	55.4	13	79/80	78.8	26
34/35	33.8	1	57/58	57.2	14	81	80.6	27
36	35.6	2	59/60	59	15	82/83	82.4	28
37/38	37.4	3	61/62	60.8	16	84/85	84.2	29
39/40	39.2	4	63	62.6	17	86/87	86	30
41/42	41	5	64/65	64.4	18	88/89	87.8	31
43/44	42.8	6	66/67	66.2	19	90	89.6	32
45	44.6	7	68/69	68	20	91/92	91.4	33
46/47	46.4	8	70/71	69.8	21	93/94	93.2	34
48/49	48.2	9	72	71.6	22	95/96	95	35
50/51	50	10	73/74	73.4	23	97/98	96.8	36
52/53	51.8	11	75/76	75.2	24	99	98.6	37
54	53.6	12	77/78	77	25			

Appendix 2: Pipe Expanding Method

⚠ **Note:**

Improper pipe expanding is the main cause of refrigerant leakage.Please expand the pipe according to the following steps:

A:Cut the pip

- Confirm the pipe length according to the distance of indoor unit and outdoor unit.
- Cut the required pipe with pipe cutter.

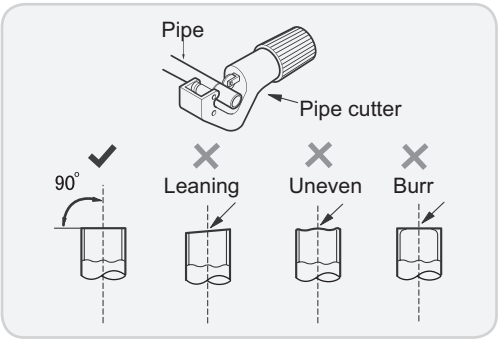

B:Remove the burrs

- Remove the burrs with shaper and prevent the burrs from getting into the pipe.

C:Put on suitable insulating pipe.

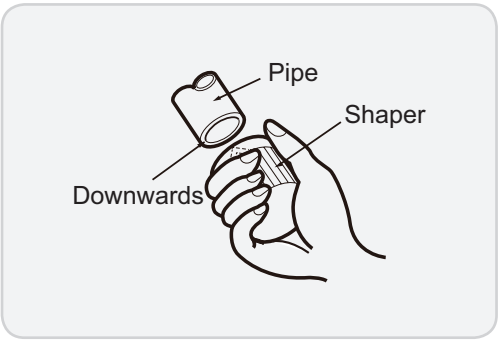

D:Put on the union nut

- Remove the union nut on the indoor connection pipe and outdoor valve; install the union nut on the pipe.

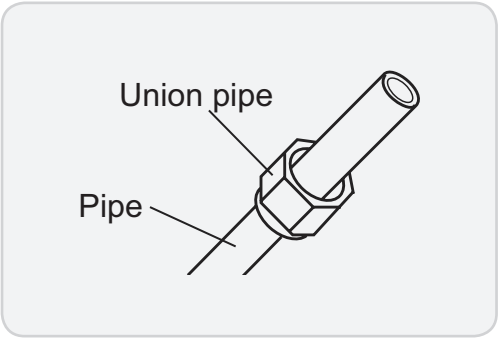

E:Expand the port

- Expand the port with expander.

⚠ **Note:**

- "A" is different according to the diameter, please refer to the sheet below:

Outer diameter(mm)	A(mm)	
	Max	Min
Φ6 - 6.35 (1/4")	1.3	0.7
Φ9 - Φ9.52 (3/8")	1.6	1.0
Φ12 - 12.70 (1/2")	1.8	1.0
Φ16 - 15.88 (5/8")	2.4	2.2

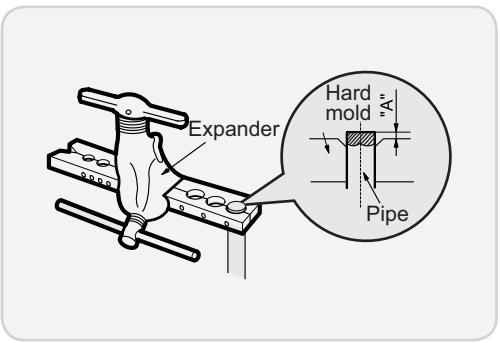

F:Inspection

- Check the quality of expanding port. If there is any blemish, expand the port again according to the steps above.

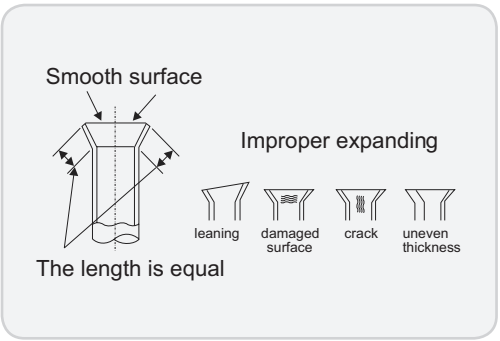

Appendix 3: List of Resistance for Temperature Sensor

Resistance Table of Ambient Temperature Sensor for Indoor and Outdoor Units(15K)

Temp(°C)	Resistance(kΩ)	Temp(°C)	Resistance(kΩ)	Temp(°C)	Resistance(kΩ)	Temp(°C)	Resistance(kΩ)
-19	138.1	20	18.75	59	3.848	98	1.071
-18	128.6	21	17.93	60	3.711	99	1.039
-17	121.6	22	17.14	61	3.579	100	1.009
-16	115	23	16.39	62	3.454	101	0.98
-15	108.7	24	15.68	63	3.333	102	0.952
-14	102.9	25	15	64	3.217	103	0.925
-13	97.4	26	14.36	65	3.105	104	0.898
-12	92.22	27	13.74	66	2.998	105	0.873
-11	87.35	28	13.16	67	2.896	106	0.848
-10	82.75	29	12.6	68	2.797	107	0.825
-9	78.43	30	12.07	69	2.702	108	0.802
-8	74.35	31	11.57	70	2.611	109	0.779
-7	70.5	32	11.09	71	2.523	110	0.758
-6	66.88	33	10.63	72	2.439	111	0.737
-5	63.46	34	10.2	73	2.358	112	0.717
-4	60.23	35	9.779	74	2.28	113	0.697
-3	57.18	36	9.382	75	2.206	114	0.678
-2	54.31	37	9.003	76	2.133	115	0.66
-1	51.59	38	8.642	77	2.064	116	0.642
0	49.02	39	8.297	78	1.997	117	0.625
1	46.6	40	7.967	79	1.933	118	0.608
2	44.31	41	7.653	80	1.871	119	0.592
3	42.14	42	7.352	81	1.811	120	0.577
4	40.09	43	7.065	82	1.754	121	0.561
5	38.15	44	6.791	83	1.699	122	0.547
6	36.32	45	6.529	84	1.645	123	0.532
7	34.58	46	6.278	85	1.594	124	0.519
8	32.94	47	6.038	86	1.544	125	0.505
9	31.38	48	5.809	87	1.497	126	0.492
10	29.9	49	5.589	88	1.451	127	0.48
11	28.51	50	5.379	89	1.408	128	0.467
12	27.18	51	5.197	90	1.363	129	0.456
13	25.92	52	4.986	91	1.322	130	0.444
14	24.73	53	4.802	92	1.282	131	0.433
15	23.6	54	4.625	93	1.244	132	0.422
16	22.53	55	4.456	94	1.207	133	0.412
17	21.51	56	4.294	95	1.171	134	0.401
18	20.54	57	4.139	96	1.136	135	0.391
19	19.63	58	3.99	97	1.103	136	0.382

Resistance Table of Tube Temperature Sensors for Indoor and Outdoor (20K)

Temp(°C)	Resistance(kΩ)
-19	181.4
-18	171.4
-17	162.1
-16	153.3
-15	145
-14	137.2
-13	129.9
-12	123
-11	116.5
-10	110.3
-9	104.6
-8	99.13
-7	94
-6	89.17
-5	84.61
-4	80.31
-3	76.24
-2	72.41
-1	68.79
0	65.37
1	62.13
2	59.08
3	56.19
4	53.46
5	50.87
6	48.42
7	46.11
8	43.92
9	41.84
10	39.87
11	38.01
12	36.24
13	34.57
14	32.98
15	31.47
16	30.04
17	28.68
18	27.39
19	26.17

Temp(°C)	Resistance(kΩ)
20	25.01
21	23.9
22	22.85
23	21.85
24	20.9
25	20
26	19.14
27	18.13
28	17.55
29	16.8
30	16.1
31	15.43
32	14.79
33	14.18
34	13.59
35	13.04
36	12.51
37	12
38	11.52
39	11.06
40	10.62
41	10.2
42	9.803
43	9.42
44	9.054
45	8.705
46	8.37
47	8.051
48	7.745
49	7.453
50	7.173
51	6.905
52	6.648
53	6.403
54	6.167
55	5.942
56	5.726
57	5.519
58	5.32

Temp(°C)	Resistance(kΩ)
59	5.13
60	4.948
61	4.773
62	4.605
63	4.443
64	4.289
65	4.14
66	3.998
67	3.861
68	3.729
69	3.603
70	3.481
71	3.364
72	3.252
73	3.144
74	3.04
75	2.94
76	2.844
77	2.752
78	2.663
79	2.577
80	2.495
81	2.415
82	2.339
83	2.265
84	2.194
85	2.125
86	2.059
87	1.996
88	1.934
89	1.875
90	1.818
91	1.736
92	1.71
93	1.658
94	1.609
95	1.561
96	1.515
97	1.47

Temp(°C)	Resistance(kΩ)
98	1.427
99	1.386
100	1.346
101	1.307
102	1.269
103	1.233
104	1.198
105	1.164
106	1.131
107	1.099
108	1.069
109	1.039
110	1.01
111	0.983
112	0.956
113	0.93
114	0.904
115	0.88
116	0.856
117	0.833
118	0.811
119	0.77
120	0.769
121	0.746
122	0.729
123	0.71
124	0.692
125	0.674
126	0.658
127	0.64
128	0.623
129	0.607
130	0.592
131	0.577
132	0.563
133	0.549
134	0.535
135	0.521
136	0.509

Resistance Table of Discharge Temperature Sensor for Outdoor(50K)

Temp(°C)	Resistance(kΩ)	Temp(°C)	Resistance(kΩ)	Temp(°C)	Resistance(kΩ)	Temp(°C)	Resistance(kΩ)
-29	853.5	10	98	49	18.34	88	4.75
-28	799.8	11	93.42	50	17.65	89	4.61
-27	750	12	89.07	51	16.99	90	4.47
-26	703.8	13	84.95	52	16.36	91	4.33
-25	660.8	14	81.05	53	15.75	92	4.20
-24	620.8	15	77.35	54	15.17	93	4.08
-23	580.6	16	73.83	55	14.62	94	3.96
-22	548.9	17	70.5	56	14.09	95	3.84
-21	516.6	18	67.34	57	13.58	96	3.73
-20	486.5	19	64.33	58	13.09	97	3.62
-19	458.3	20	61.48	59	12.62	98	3.51
-18	432	21	58.77	60	12.17	99	3.41
-17	407.4	22	56.19	61	11.74	100	3.32
-16	384.5	23	53.74	62	11.32	101	3.22
-15	362.9	24	51.41	63	10.93	102	3.13
-14	342.8	25	49.19	64	10.54	103	3.04
-13	323.9	26	47.08	65	10.18	104	2.96
-12	306.2	27	45.07	66	9.83	105	2.87
-11	289.6	28	43.16	67	9.49	106	2.79
-10	274	29	41.34	68	9.17	107	2.72
-9	259.3	30	39.61	69	8.85	108	2.64
-8	245.6	31	37.96	70	8.56	109	2.57
-7	232.6	32	36.38	71	8.27	110	2.50
-6	220.5	33	34.88	72	7.99	111	2.43
-5	209	34	33.45	73	7.73	112	2.37
-4	198.3	35	32.09	74	7.47	113	2.30
-3	199.1	36	30.79	75	7.22	114	2.24
-2	178.5	37	29.54	76	7.00	115	2.18
-1	169.5	38	28.36	77	6.76	116	2.12
0	161	39	27.23	78	6.54	117	2.07
1	153	40	26.15	79	6.33	118	2.02
2	145.4	41	25.11	80	6.13	119	1.96
3	138.3	42	24.13	81	5.93	120	1.91
4	131.5	43	23.19	82	5.75	121	1.86
5	125.1	44	22.29	83	5.57	122	1.82
6	119.1	45	21.43	84	5.39	123	1.77
7	113.4	46	20.6	85	5.22	124	1.73
8	108	47	19.81	86	5.06	125	1.68
9	102.8	48	19.06	87	4.90	126	1.64

BOREAL

elevate your comfort