RWL	PAW	LC201PPQI	4/15/02

Neutral Lug Kit

Catalog No. NL20

This kit provides additional lug for either
neutral bar or ground bar for CH or BR loadcenters.
Suitible for #6–2/0 aluminum or copper wire.

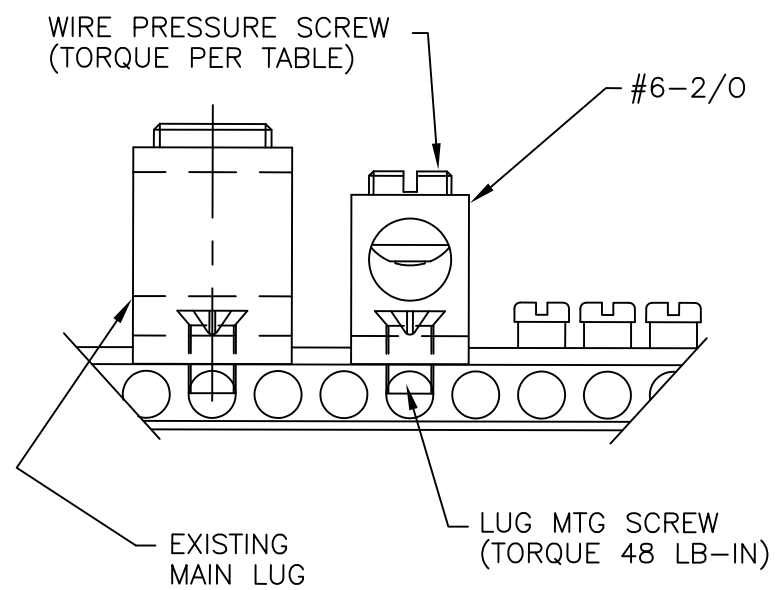

KIT CONTAINS:

QTY.	DESCRIPTION
1	# 6–2/0 LUG
1	LUG MTG. SCREW (1/4–28)
1	LUG WIRE PRESSURE SCREW

TOOLS REQUIRED:

- Medium blade screwdriver
- # 2 Phillips screwdriver
- Torque Wrench

Wire Size AWG Al–Cu	Wire Pressure Screw Torque (lb–in)
#6–4	45 lb–in.
#3–2/0	50 lb–in.

1. Turn off power ahead of this loadcenter before installing this kit.
2. Refer to figure above and remove (3) wire pressure screws adjacent to existing main lug.
3. Assemble lug to top of neutral bar using screw provided. Torque screw to 48 lb–in.
4. When wiring lug, torque wire pressure screw per table above.

Note: The anti–turn rib on bottom side of lug may be assembled on either side of neutral bar.

Cutler–Hammer
CH & BR Loadcenter

CAT. NO. NL20 | 1 PC

SERIES: A

NEUTRAL LUG KIT
2/0 LUG

PUB. 24031 REV. A

Made in U.S.A.

UNLESS OTHERWISE SPECIFIED
DIMENSIONS IN INCHES
TWO PL. DEC. ±.
THREE PL. DEC. ±.
ANGLES ±
ONE PL. MM. ±
TWO PL. MM. ±
TORQUE ±1

STATISTICAL SAMPLED DIMENSION (ST)
REQUIRED INSPECTION DIMENSION *

PER C–H SPEC 848406A & ASME Y14.5M 94

DWG. NO. PUB