ASSEMBLY INSTRUCTIONS

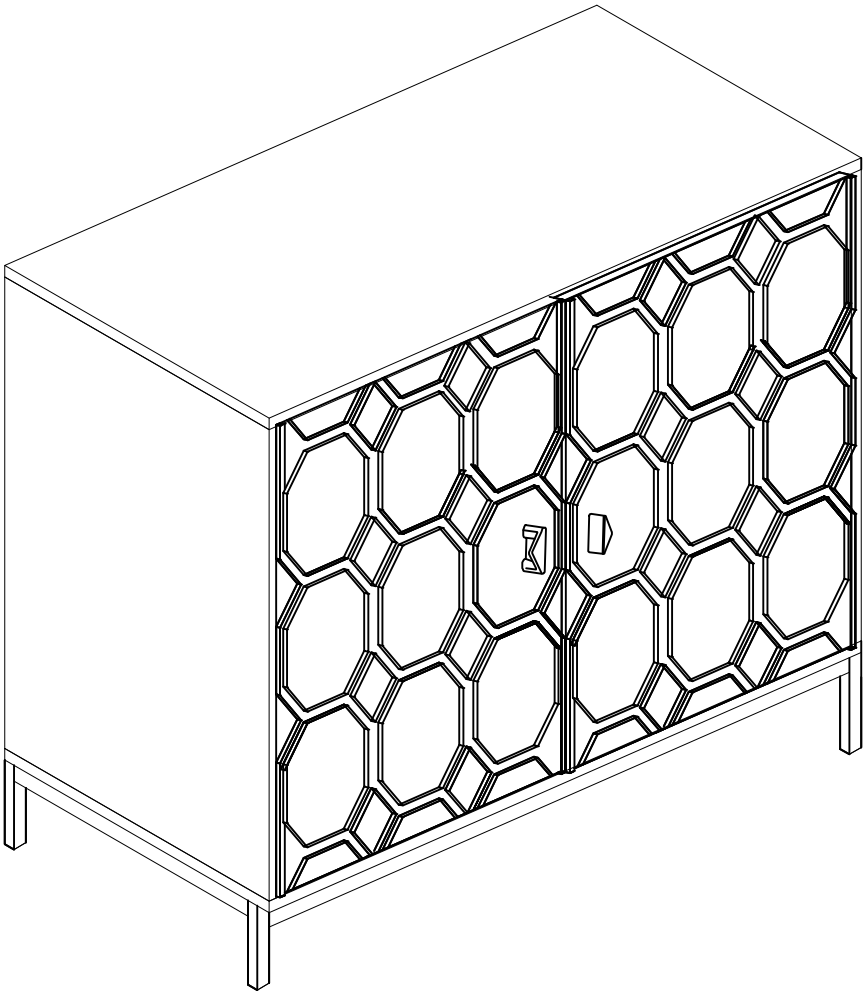

Phone number:303-747-4421
service@alipuinc.com
Web:https://clihome.net/

MADE IN CHINA

ASSEMBLY INSTRUCTIONS

Part List:

ITEM	DESCRIPTION	PART	QTY
1	Top panel	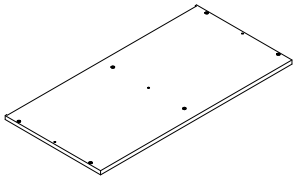	1
2	Bottom panel	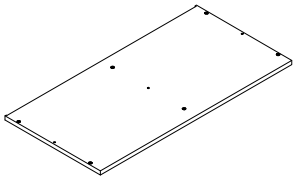	1
3	Left side panel	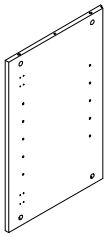	1
4	Right side panel	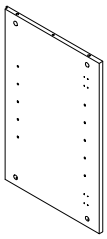	1
5	Middle side plate	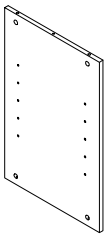	1
6	Back panel	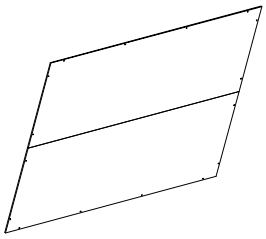	1

Part List:

ITEM	DESCRIPTION	PART	QTY
7	Left door	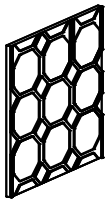	1
8	Right door	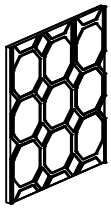	1
9	Adjustable shelf	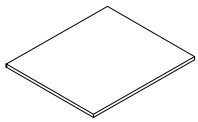	2
10	Leg	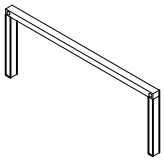	2
11	Leg	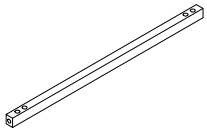	2

MADE IN CHINA

ASSEMBLY INSTRUCTION

Hardware List:

ITEM	DESCRIPTION	PART	QTY
A	Camlock bolt		12
B	Camlock		12
C	Wooden dowel	Φ6*30mm	6
D	Bolt	Φ1/4″*1-1/5″	10
E	Allen wrench		1
F	Bolt	Φ1/4″*1-1/2″	4
G	Handle		2
H	Machine screw	Φ5/32″*1 3/5″	2
I	Door fitting		4

Hardware List:

ITEM	DESCRIPTION	PART	QTY
J	Round head screw	Φ4*12mm	24
K	Back screw	Φ3*12mm	16
L	Shelf support		8
M	Safety wall strap		2
N	Plastic anchor		2
O	Mounting screw	Φ4*38mm	2
P	Washer		2

ASSEMBLY INSTRUCTION

* Required screwdriver & mallet, not included.
* Before discarding packing materials, please check to make sure that all parts and hardware is present.
* Two people needed for assembly.
* Please follow the instructions closely; do not over tighten screws or bolts unless instructed.
* After a few days from initial assembly, the product may have acclimated to the new environment. Please retighten the hardware.

Guideline For Assembling of Cam Lock(A & B)

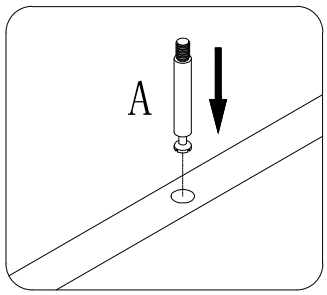

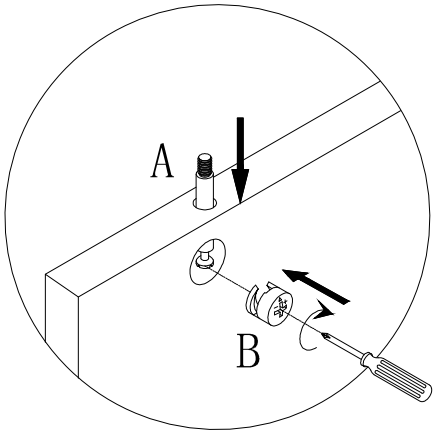

Screw camlock bolt (A) to wood part.
Do not assemble camlock (B) unless instructed.
To assemble camlock (B), ensure long side of the + is facing the bolt (A) before inserting into hole.

ASSEMBLY INSTRUCTION

STEP 1

D:	10PCS
E:	1PC
F:	4PCS

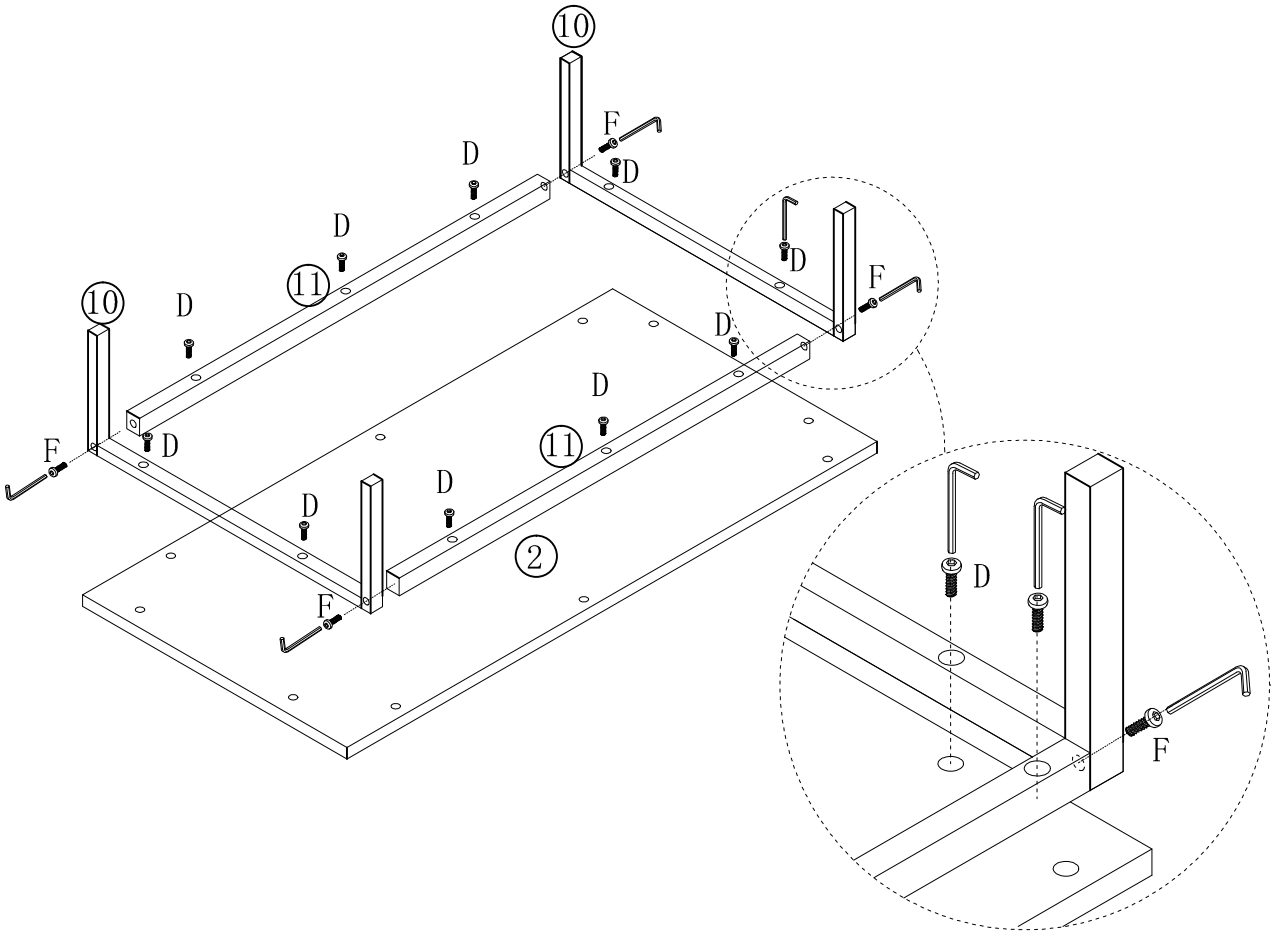

ASSEMBLY INSTRUCTION

STEP 2

A:	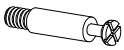	12PCS
B:		12PCS
C:		6PCS

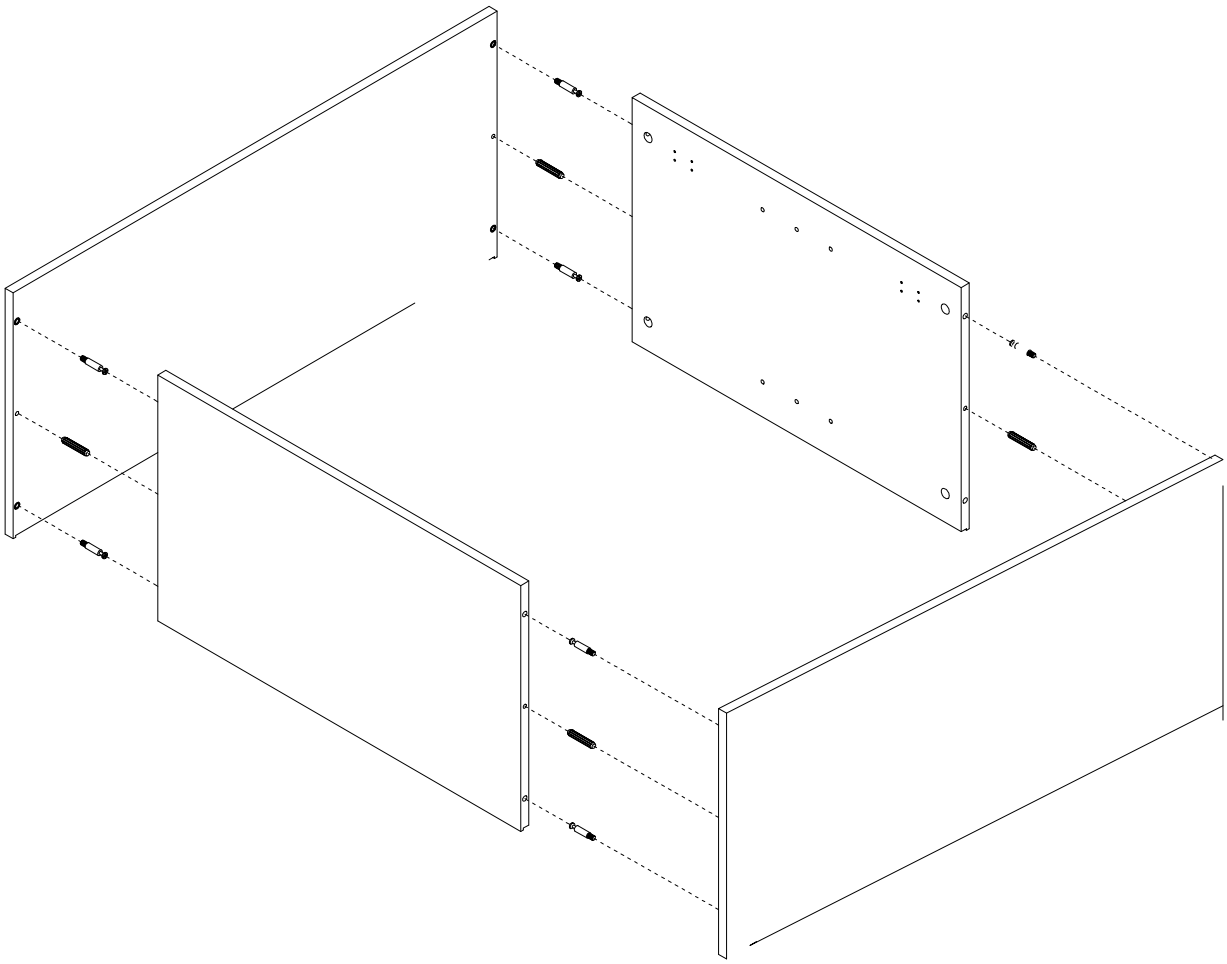

MADE IN CHINA

ASSEMBLY INSTRUCTION

STEP 6

L:	8PCS

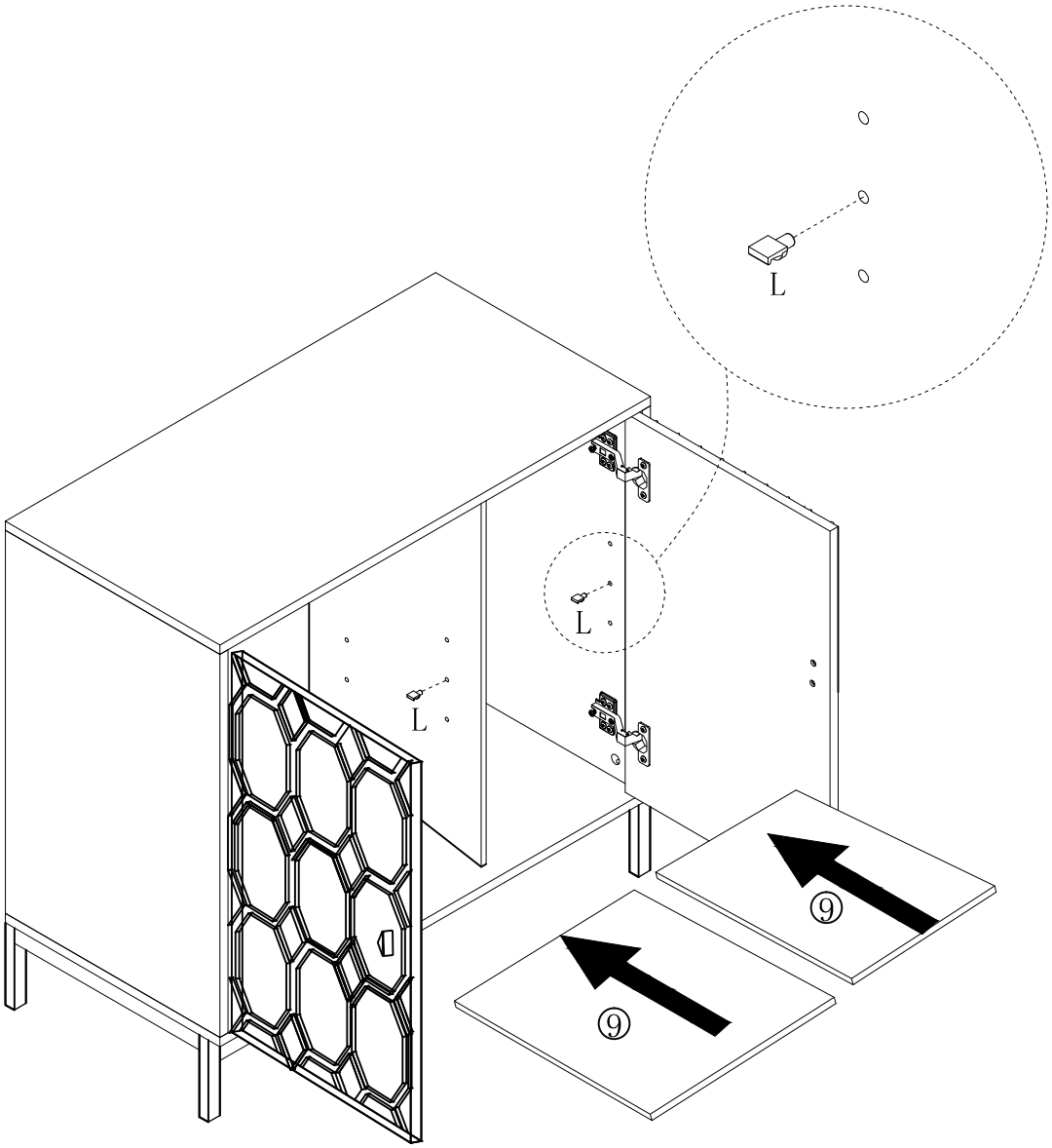

MADE IN CHINA

ASSEMBLY INSTRUCTION

STEP 7

N:		2PC
O:		2PC
P:		2PC

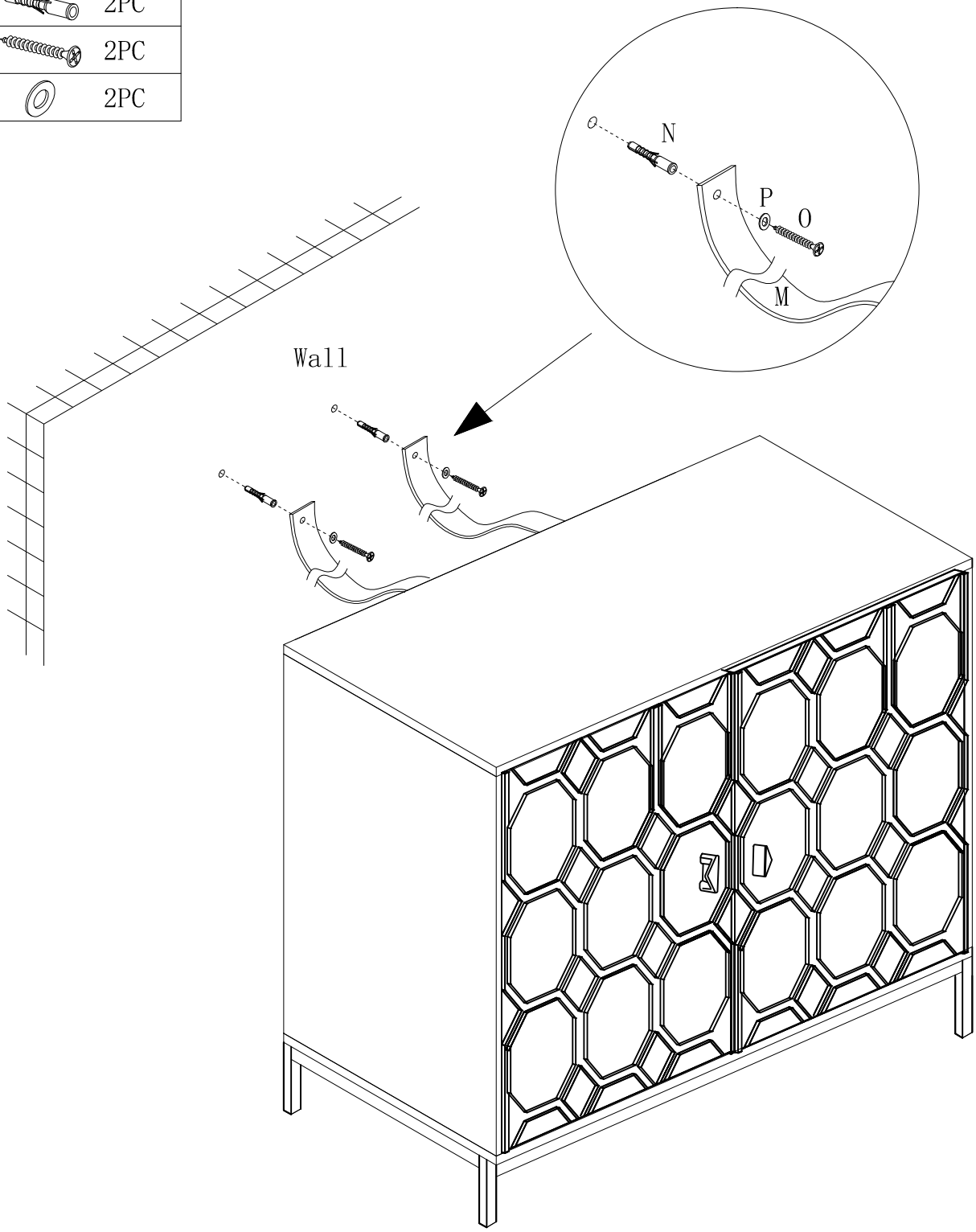

MADE IN CHINA