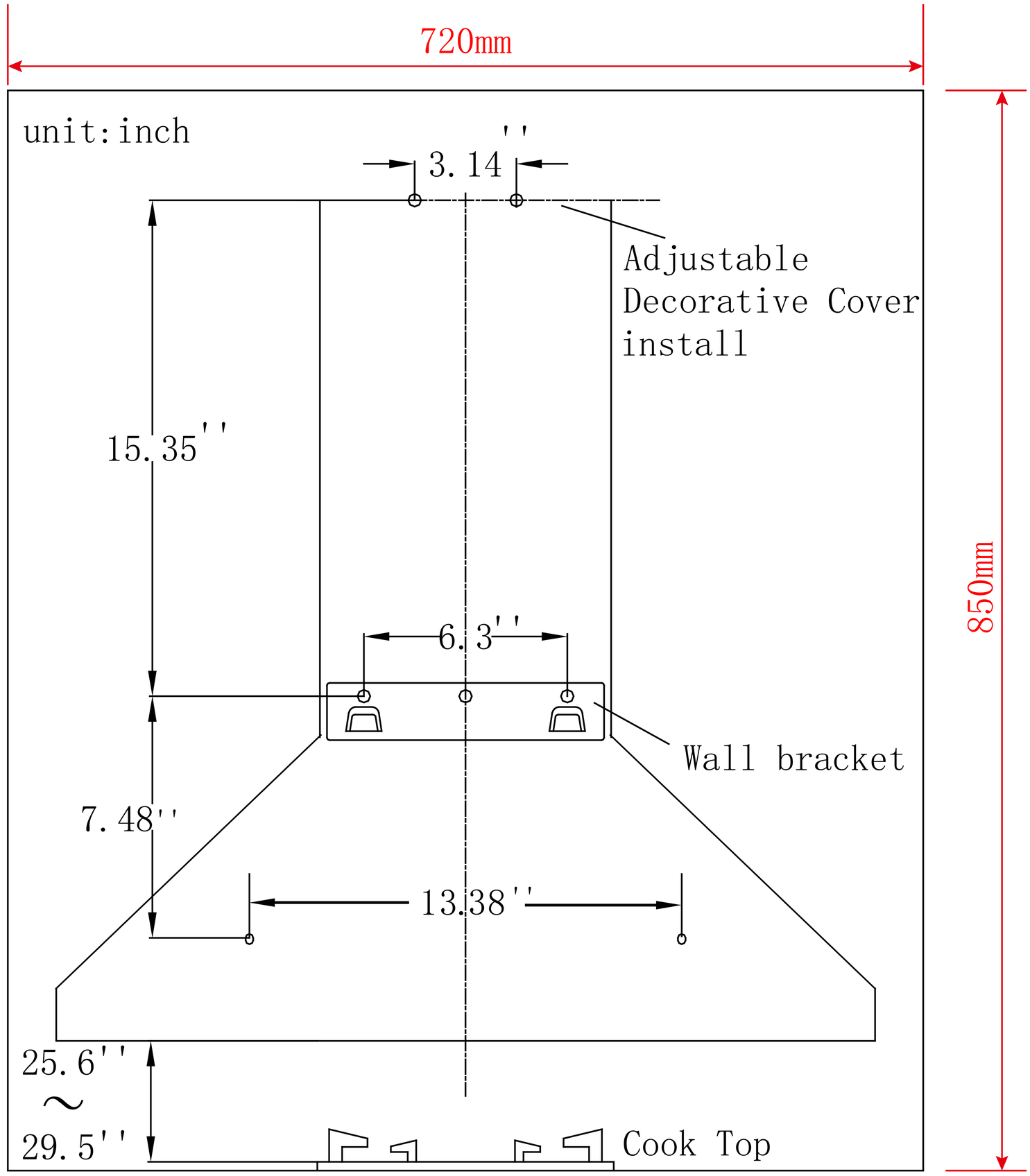
720mm
unit:inch
3.14''
Adjustable
Decorative Cover
install
15.35''
850mm
6.3''
Wall bracket
7.48''
13.38''
25.6''
~
29.5''
Cook Top