GP20000E

GENERAC®

GP20000E
GP Series
Commercial/Residential Portable Generators

FEATURES

- **Fuel efficient 817cc OHV engine** with EFI technology optimizes fuel efficiency and requires less maintenance.
- **Electronic safe technology** with less than <5% THD to safely power sensitive electronic equipment in your home.
- **Large-capacity fuel tank** with incorporated fuel gauge provides durability and 7.75-hour runtime when 50% power is being used.
- **Easy to use electric start** battery included, provides hassle-free start-up.
- **Hardened 1 1/4" steel tube cradle** for added strength and durability.
- **Heavy-duty, never-flat wheels** for reliable portability.
- **COsense®** – STOPS, ALERTS, SAVES. Powerful protection from hazardous carbon monoxide.
- **Low-oil pressure shutdown** automatically safeguards engine from damage.
- **Hour Meter** tracks maintenance intervals.
- **HomeLink Transfer Switch Compatible** 30-Amp and 50-Amp manual transfer switch options provide an alternative to home back up power with a more affordable solution.

Model G0089390 UPC 696471105605 (49-State)



Photograph may not represent actual content.

AC Rated Output Running Watts 20000
AC Maximum Output Starting Watts 22500

CONTROL PANEL

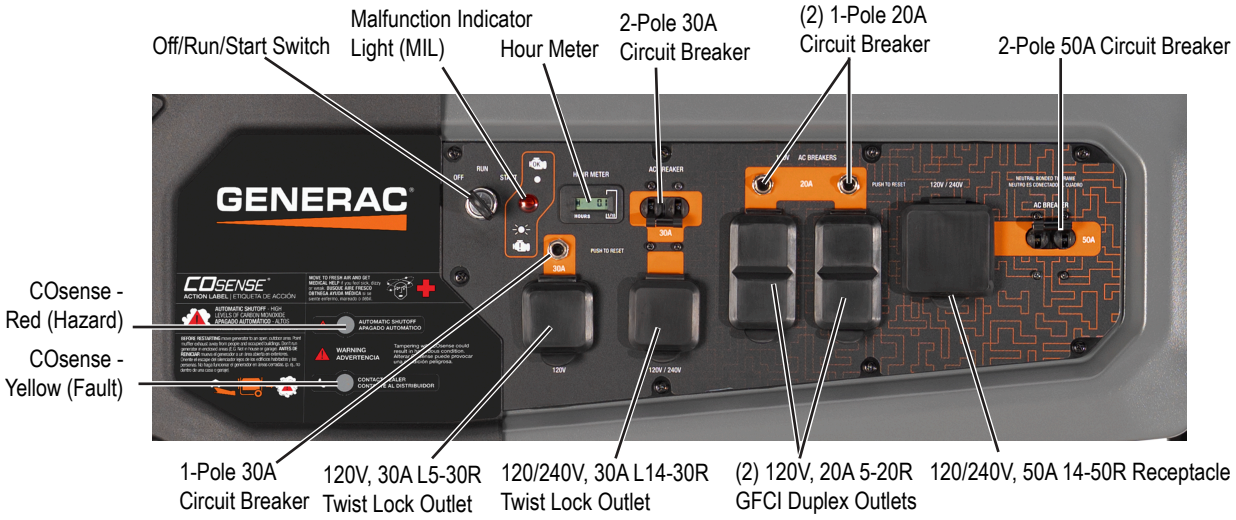

USA ENGINEERED

GENERAC®

SPECIFICATIONS

Product Series	GP20000E
Model Configuration	8939-0 (49 State)
AC Rated Output Running Watts	20000
AC Maximum Output Starting Watts	22500
Rated AC Voltage	120/240 VAC
Rated AC Frequency	60 Hz
Rated VAC Amperage	83.3 / 166.6
Engine Displacement	817cc
Engine Type	OHV
Engine RPM	3600
Recommended Oil	10W-30 / SAE 30
Oil Capacity qt (L)	w/ Filter Change: 2.2 (2.1) w/o Filter Change: 2.0 (1.95)
Lubrication Method	Oil Pump
Automatic Voltage Regulation (AVR)	Yes
Starting Method	Electric
Low Oil Shutdown Method	Low Pressure
Starting Method	Electric

Start Switch Type	OFF/RUN/STOP Key Switch
Start Switch Location	On Control Panel
Battery Included	Yes
Battery Type	Group U1
Battery Part No.	N/A (Replacement batteries must be purchased locally)
Low Oil Shutdown	Low Pressure
Neutral Bonded to Ground	Yes - Neutral Bonded to Frame
Fuel Gauge	Built-In Tank
Fuel Tank Capacity Gal (L)	14.2 (54.0)
Run Time at 50% (Hours)	7.75
Handle Style	Folding, Locking
Wheel Type	12 in. Never Flat
Warranty- Commercial	2 Year Limited
Warranty- Residential	3 Year Limited

DIMENSIONS AND WEIGHTS

Length in (mm)	39.0 (990)
Width in (mm)	32.3 (820)
Height in (mm)	36.8 (935)
Extended Length in (mm)	58.7 (1490)
Carton Length in (mm)	40 (1016)
Carton Width in (mm)	27 (685.8)
Carton Height in (mm)	37.7 (958)
Unit Weight lbs (kg)	444 (201.4)
Shipping Weight lbs (kg)	477 (216.4)

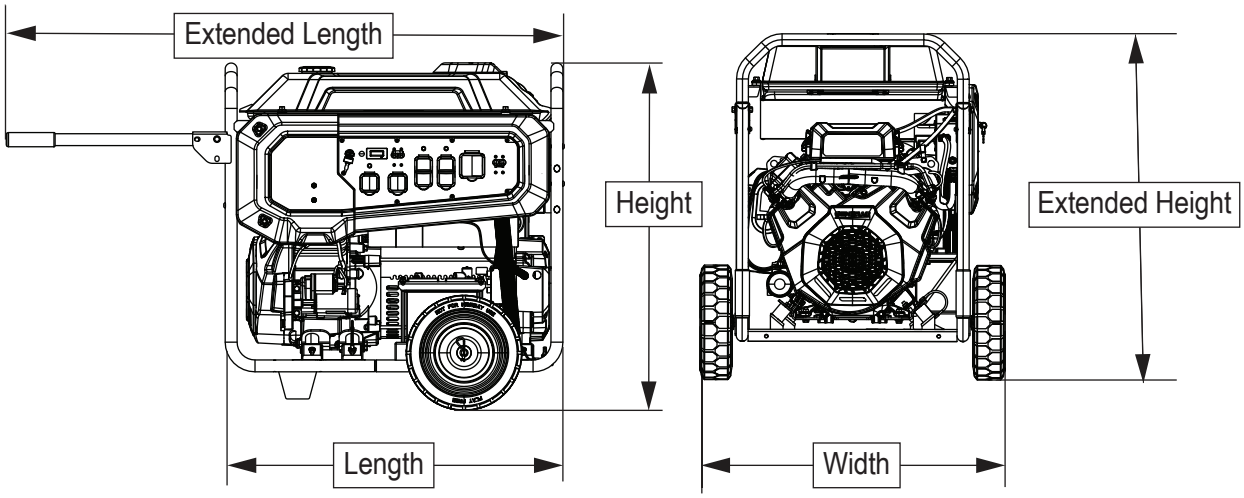

©2026 Generac Power Systems, Inc. All rights reserved. All specifications are subject to change without notice.
Part No. A0011308243
Rev. Rev A (Initial Release) 08/10/2026