ASSEMBLY INSTRUCTIONS
TWIN BED + 2 DRAWER

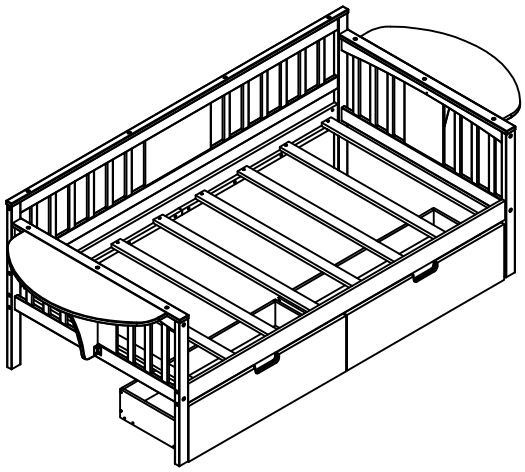

Thank you for purchasing this quality product. Be sure to check all packing materials carefully for small parts which may have come loose inside the carton during shipment. Separate, idenify and count all parts and hardware. Compare with the parts list to be sure all parts are present.

"DO NOT TIGHTEN SCREWS UNTIL COMPLETELY ASSEMBLED"

SIZE OF MATTRESS AND FOUNDATION (SUPPORT)

This bed is designed to use a twin mattress(37½"-38½"x74-75") and bunkie board(37½"x74"). The total thickness must not exceed **6"** inchess. Do not use mattress without the proper bunkie board of safe foundation.

Note: There must be at least **5"** inches from top surface of mattress to top edge or guardrails.

REPLACEMENT PARTS.

Replacement parts, including additiomal guardrails, may be obtained from place of purchase or original distributor.

If you have any questions, please feel free to contact us.
Email: lowes.team@qualfurn.net

IMPORTANT: PLEASE READ INSTRUCTIONS BEFORE STARTING THE ASSEMBLY

ASSEMBLY INSTRUCTIONS
TWIN BED + 2 DRAWER

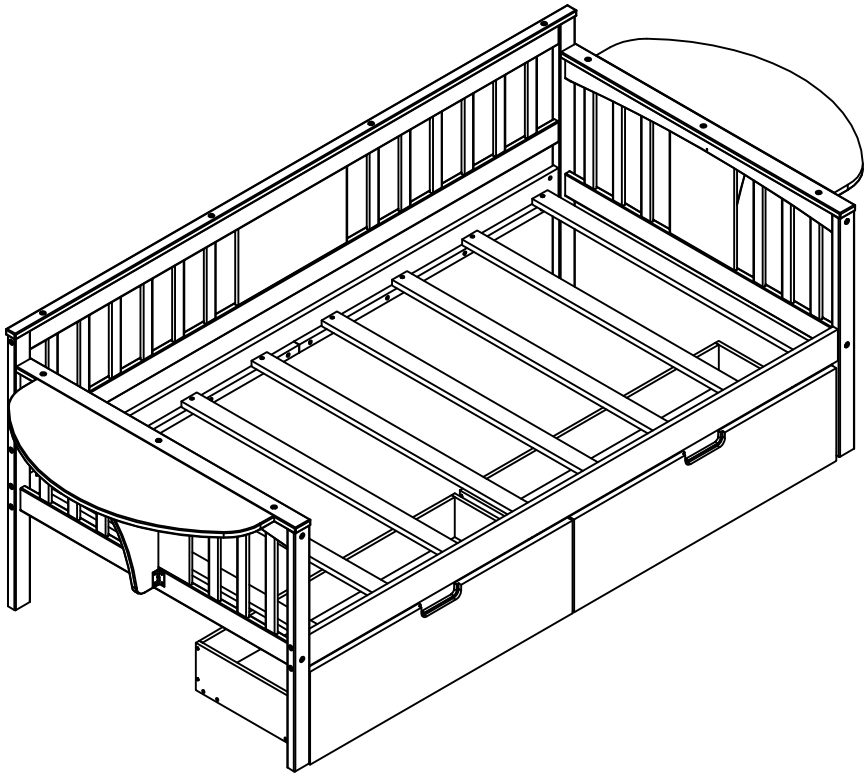

Thank you for purchasing this quality product. Be sure to check all packing materials carefully for small parts which may have come loose inside the carton during shipment. Separate, idenify and count all parts and hardware. Compare with the parts list to be sure all parts are present.

"DO NOT TIGHTEN SCREWS UNTIL COMPLETELY ASSEMBLED"

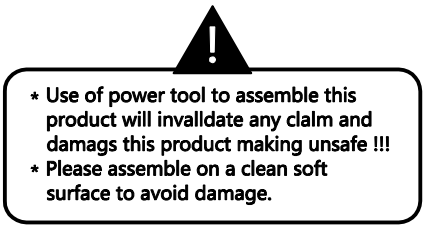

* Use of power tool to assemble this product will invalldate any clalm and damags this product making unsafe !!!
* Please assemble on a clean soft surface to avoid damage.

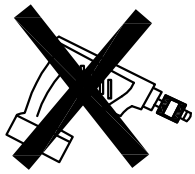

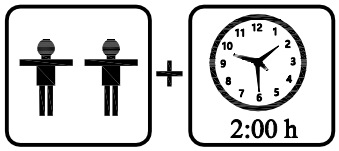

Tools Required

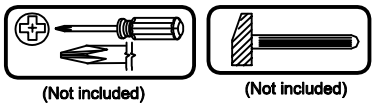

IMPORTANT:
PLEASE READ INSTRUCTIONS BEFORE STARTING THE ASSEMBLY

Detail View - TWIN BED + 2 DRAWER

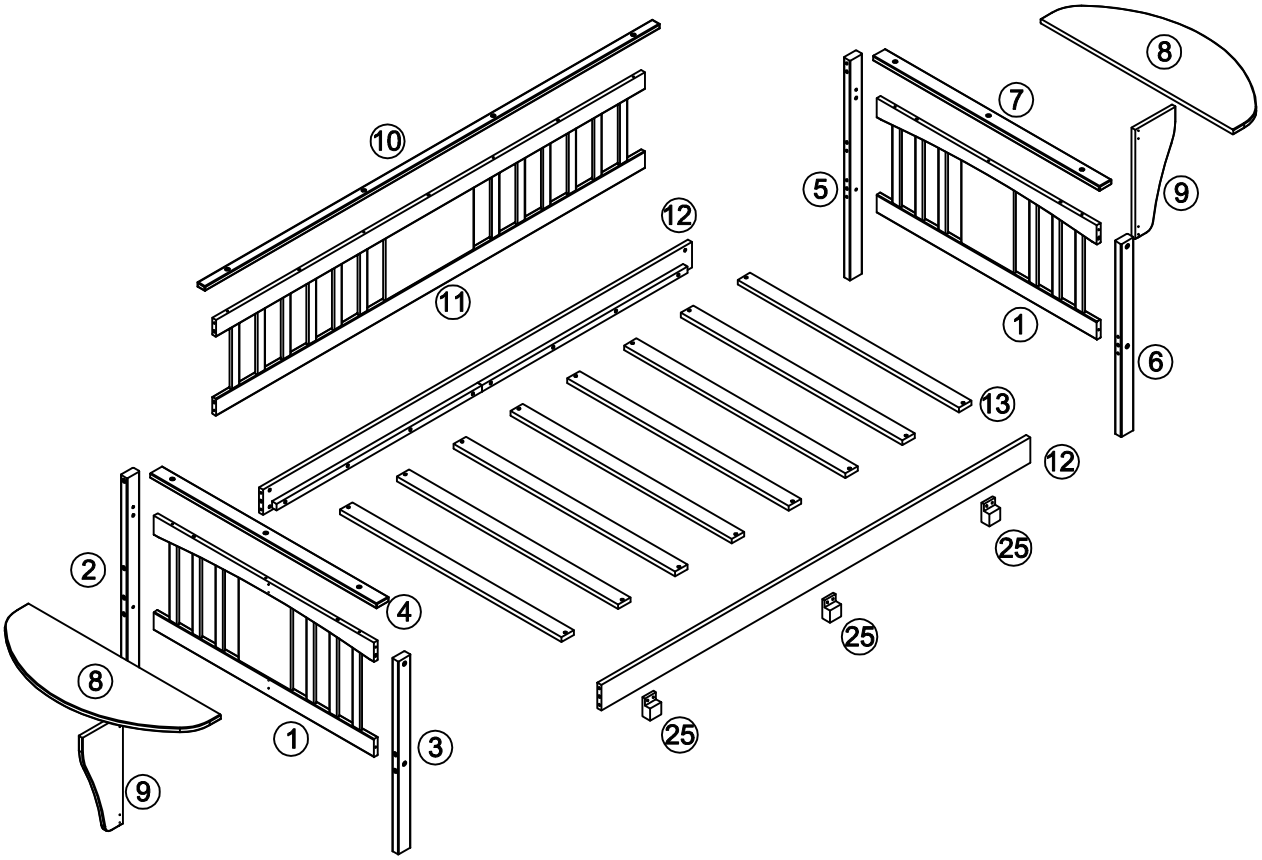

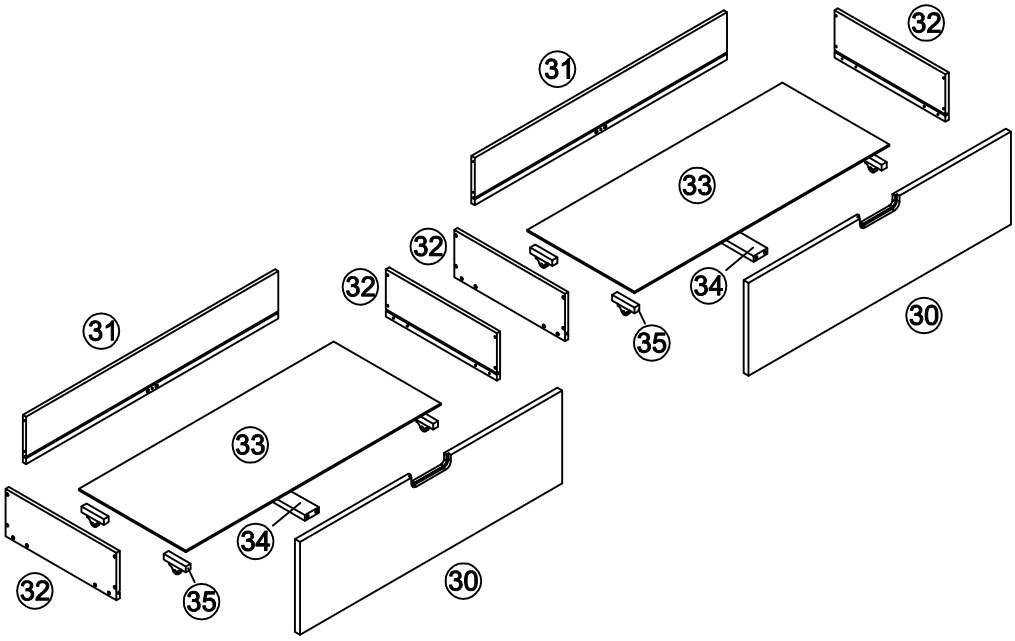

Part List

1 : Side Frame - 2pcs	2 : Left Back Post - 1pc	3 : Left Front Post - 1pc
4 : Left Cap - 1pc	5 : Right Back Post - 1pc	6 : Right Front Post - 1pc
7 : Right Cap - 1pc	8 : Side Top Panel - 2pcs	9 : Bracket - 2pcs
10 : Back Cap - 1pc	11 : Back Frame - 1pc	12 : Rail - 2pcs
13 : Slat - 8pcs	25 : Trundle Stopper -3Pcs	30 : Front Panel Of Drawer -2Pcs
31 : Back Panel Of Drawer -2Pcs	32 : Side Panel Of Drawer -4Pcs	33 : Bottom Panel Of Drawer -2Pcs

Part List

34 : Crossprece - 2pcs 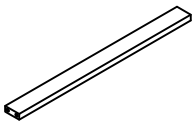	35 : Wheels - 8pcs	

Part List - WF282121

1 : Side Frame - 2pcs 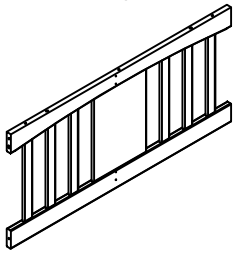	8 : Side Top Panel - 2pcs 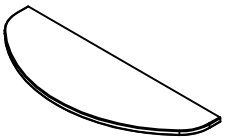	9 : Bracket - 2pcs
13 : Slat - 8pcs 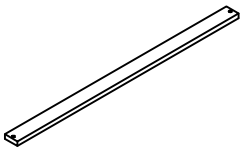	25 : Trundle Stopper -3Pcs 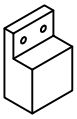	30 : Front Panel Of Drawer -2Pcs 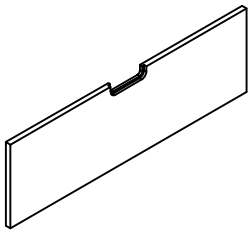
31 : Back Panel Of Drawer -2Pcs 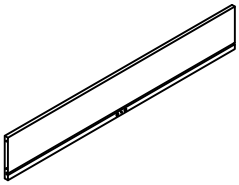	32 : Side Panel Of Drawer -4Pcs 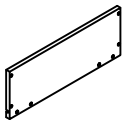	33 : Bottom Panel Of Drawer -2Pcs 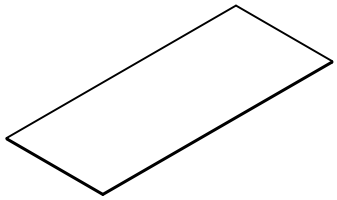
35 : Wheels - 8pcs	34 : Crossprece - 2pcs 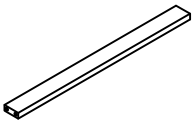	

Part List - WF282122

2 : Left Back Post - 1pc	3 : Left Front Post - 1pc	4 : Left Cap - 1pc 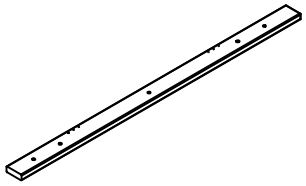
5 : Right Back Post - 1pc	6 : Right Front Post - 1pc	7 : Right Cap - 1pc 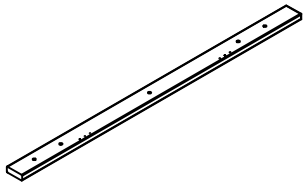
10 : Back Cap - 1pc 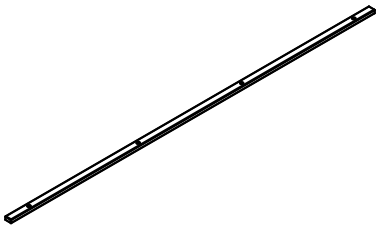	11 : Back Frame - 1pc 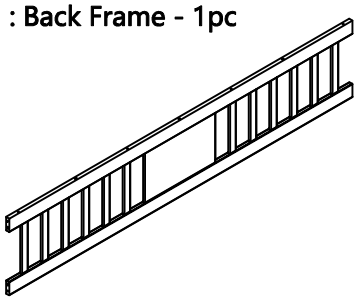	12 : Rail - 2pcs 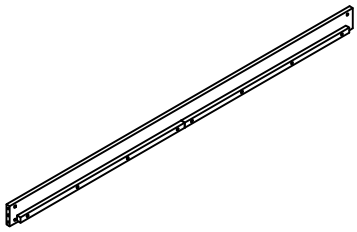

Hardware List - WF282121

A : Wood Dowel - 27pcs ⌀10x40mm	B : Hex - Head Screw - 10pcs ⌀6.2x32mm	C : Hex - Head Screw - 8pcs ⌀6.2x50mm
D : Hex - Head Screw - 4pcs ⌀6.2x70mm	E : Hex - Head Bolts - 8pcs ⌀1/4"x70mm	F : Horizontal-Hole Bolts - 8pcs ⌀1/4"xØ10x12.5mm
G : Round Head Screw - 32pcs ⌀4x30mm	H : Hinge - 4pcs 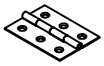 55x40mm	I : Hinge - 4pcs 44x36mm
J : Flat Head Screw - 40pcs ⌀3.5x14mm	N : Round Head Screw - 24pcs ⌀4x25mm	Z : Allen Wrench - 1pc 4mm

Step: 1

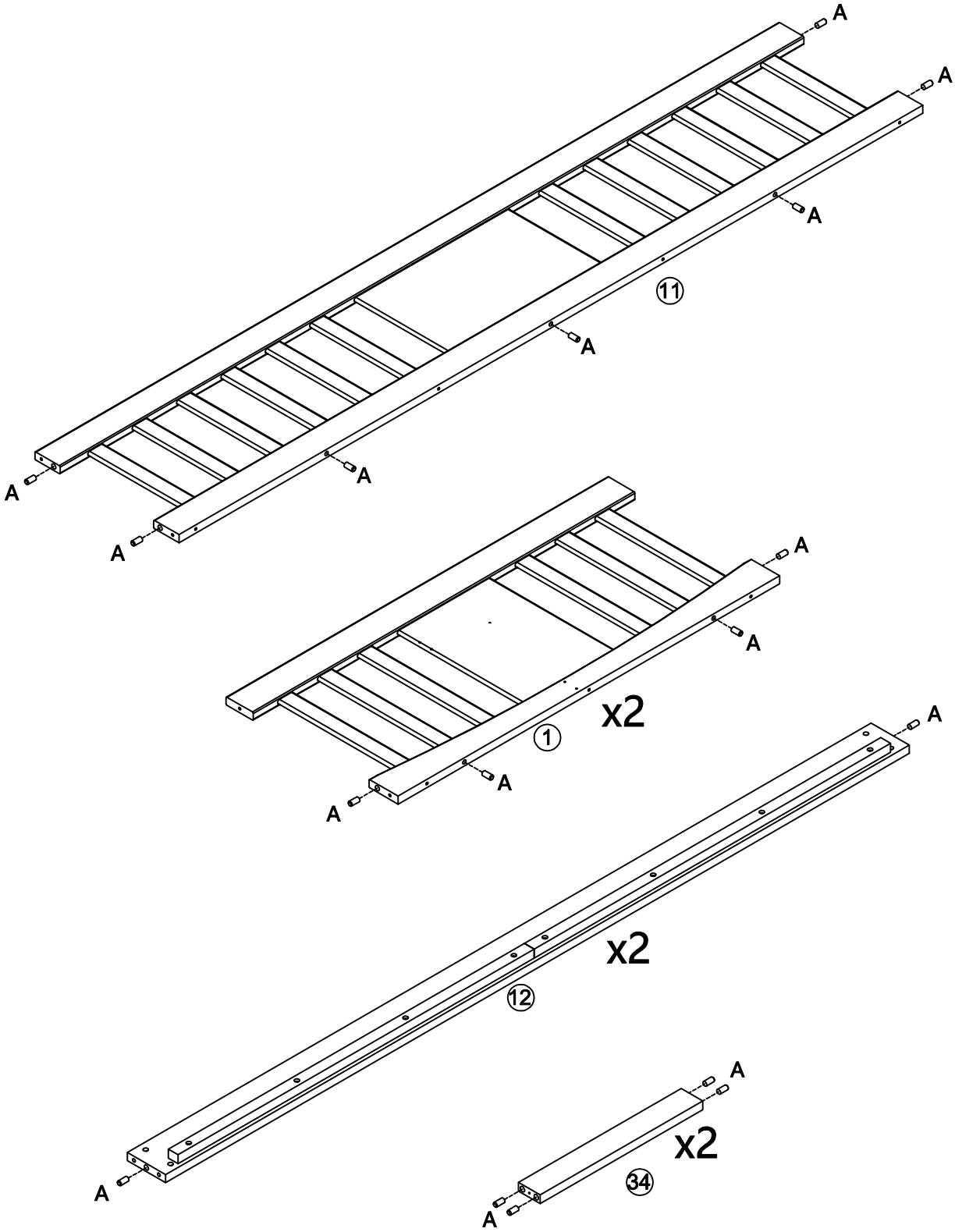

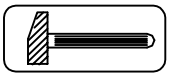

		Qty
A		27

Step: 2

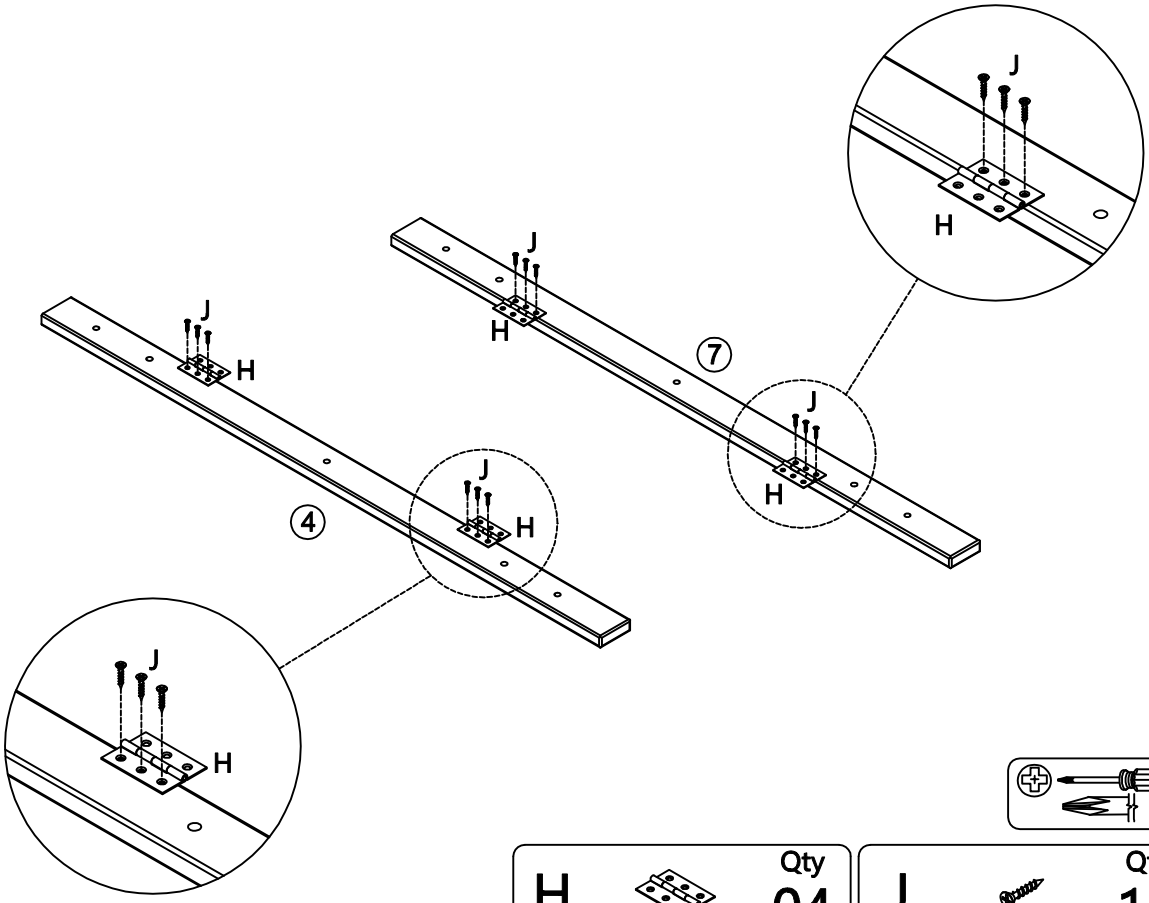

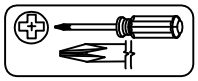

H	Qty 04	J	Qty 12

Step: 3

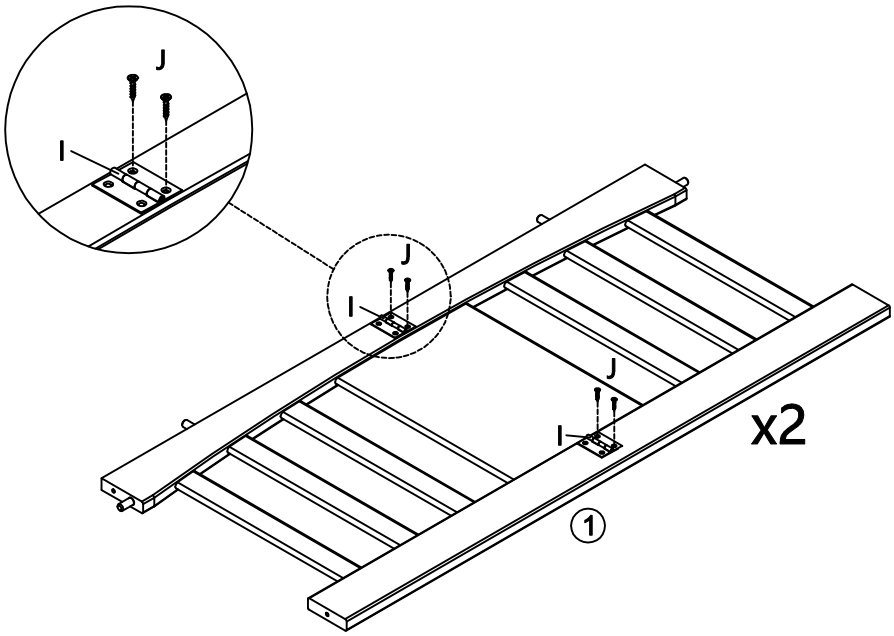

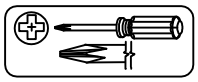

I	Qty 04	J	Qty 08

Step: 4

C
C
C
C
C
C
②
①
③
⑥
①
⑤

C	Qty	08
Z	Qty	01

Step: 5

B
B
B
B
B
B
④
⑦

B	Qty	06
Z	Qty	01

Step: 6

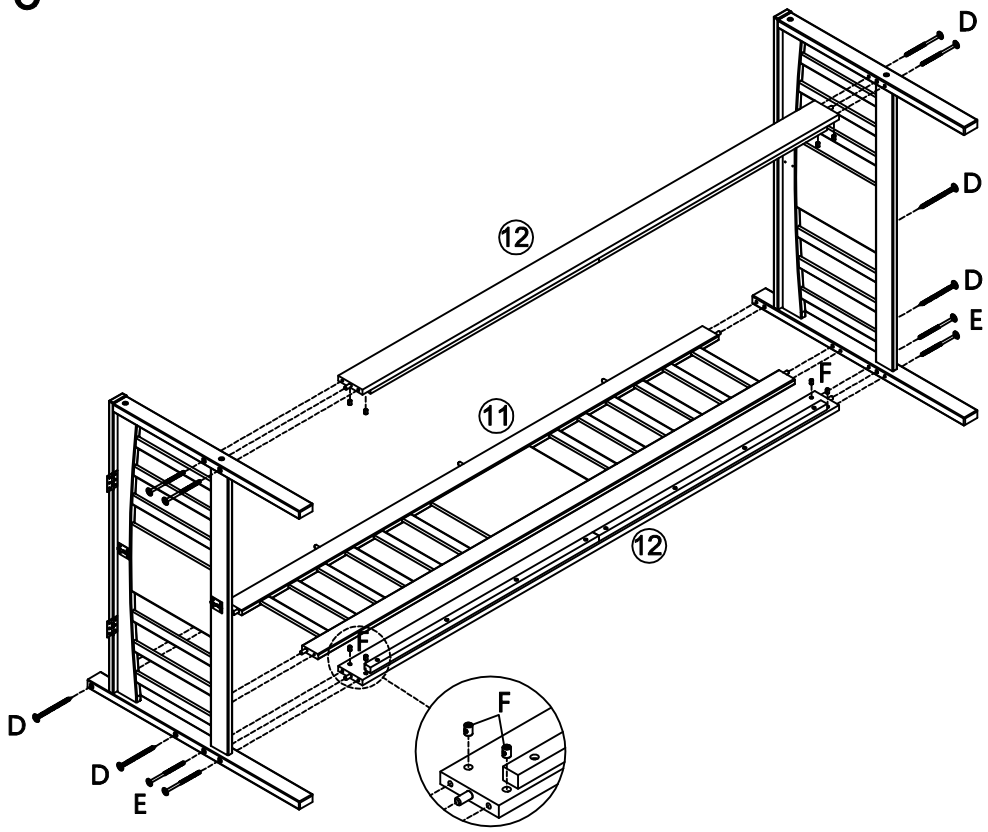

D	E	F	Z
Qty 04	Qty 08	Qty 08	Qty 01

Step: 7

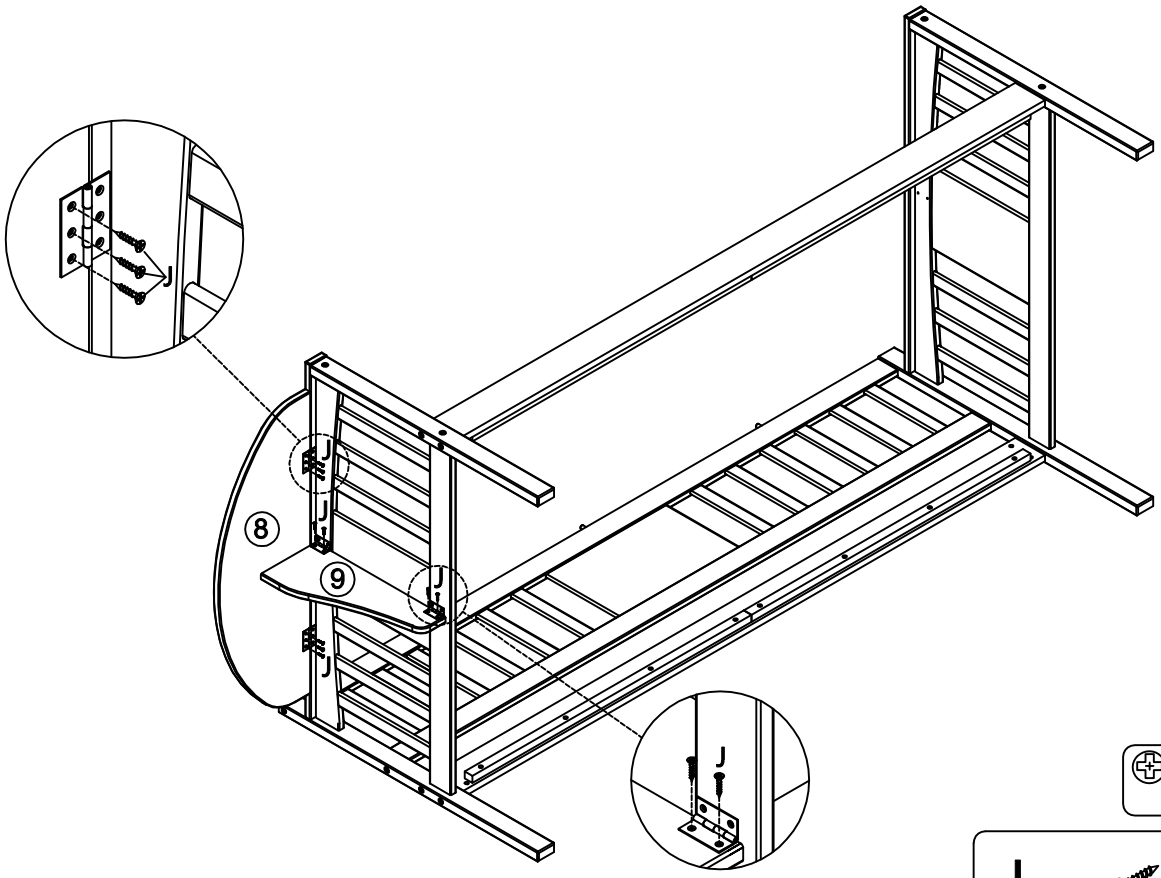

J
Qty 10

Step: 8

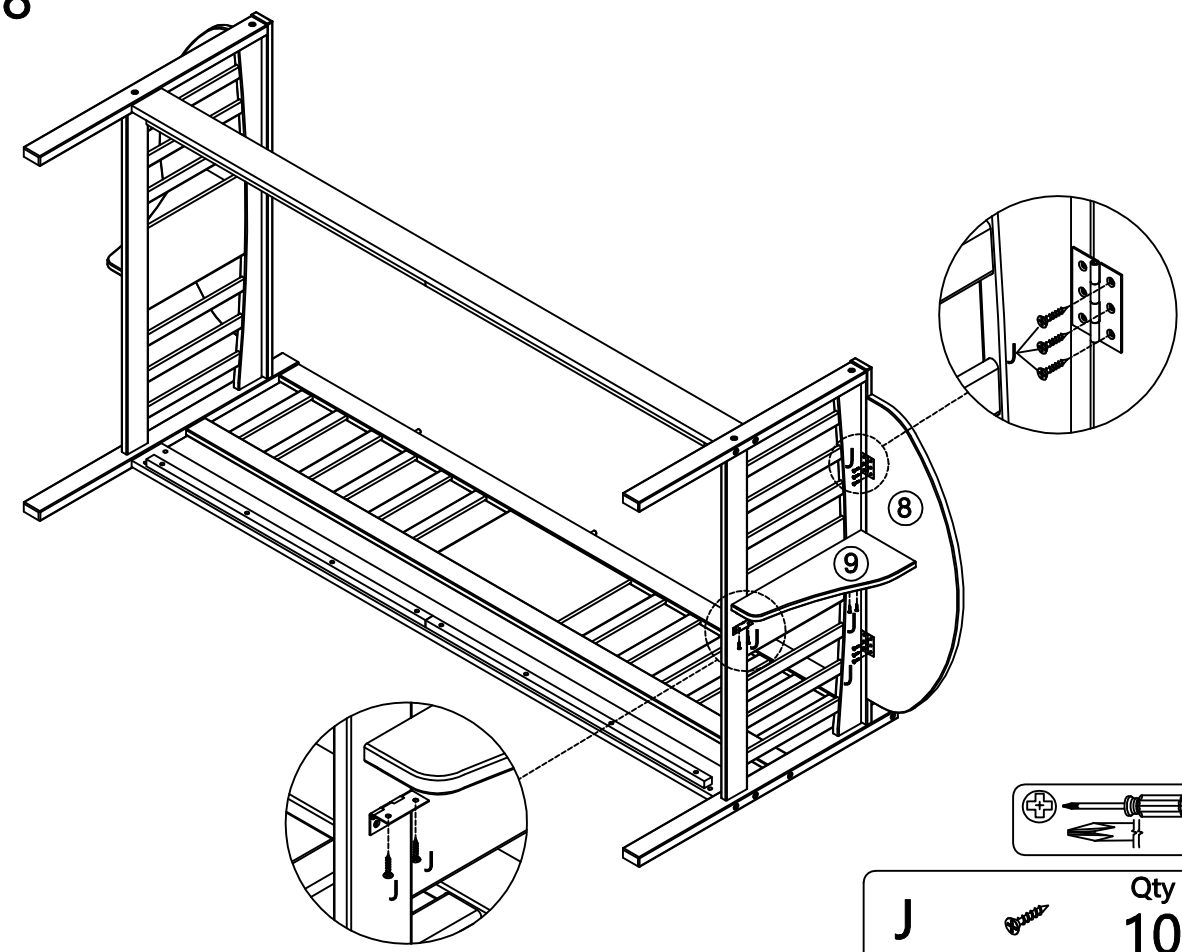

		Qty
J		10

Step: 9

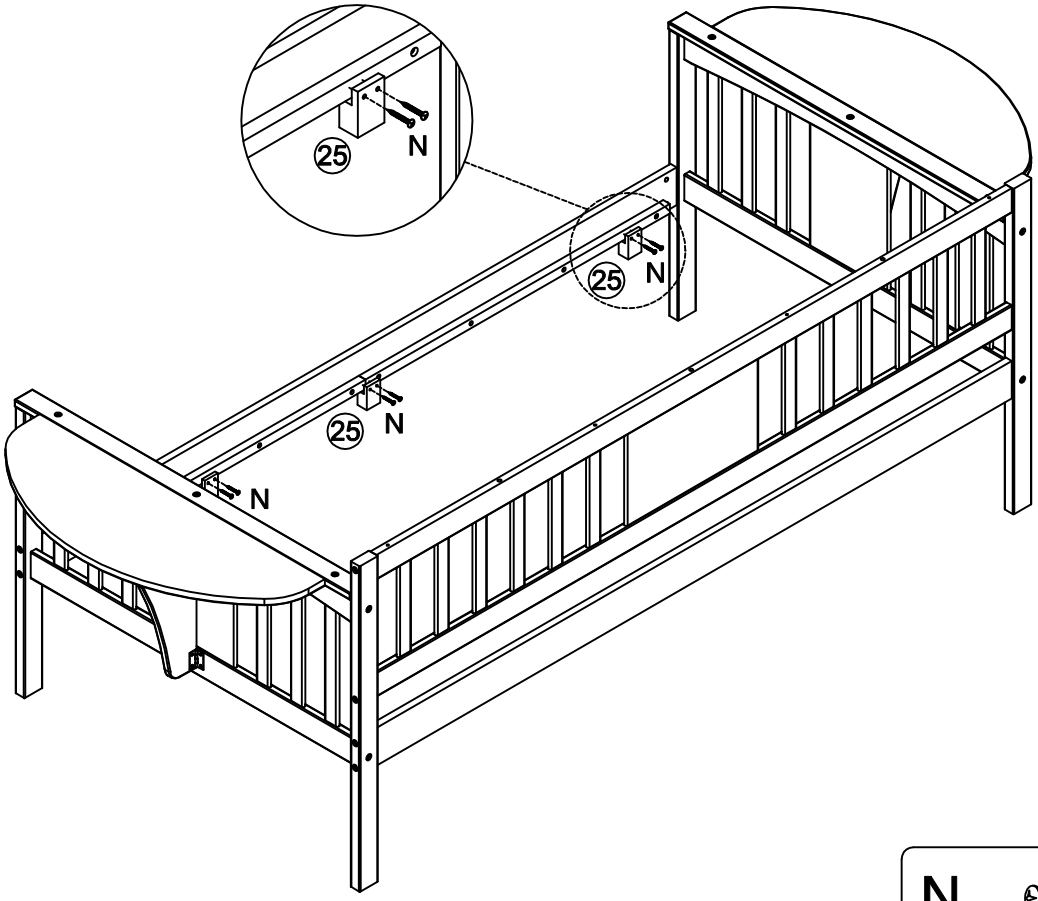

		Qty
N		6

Step: 10

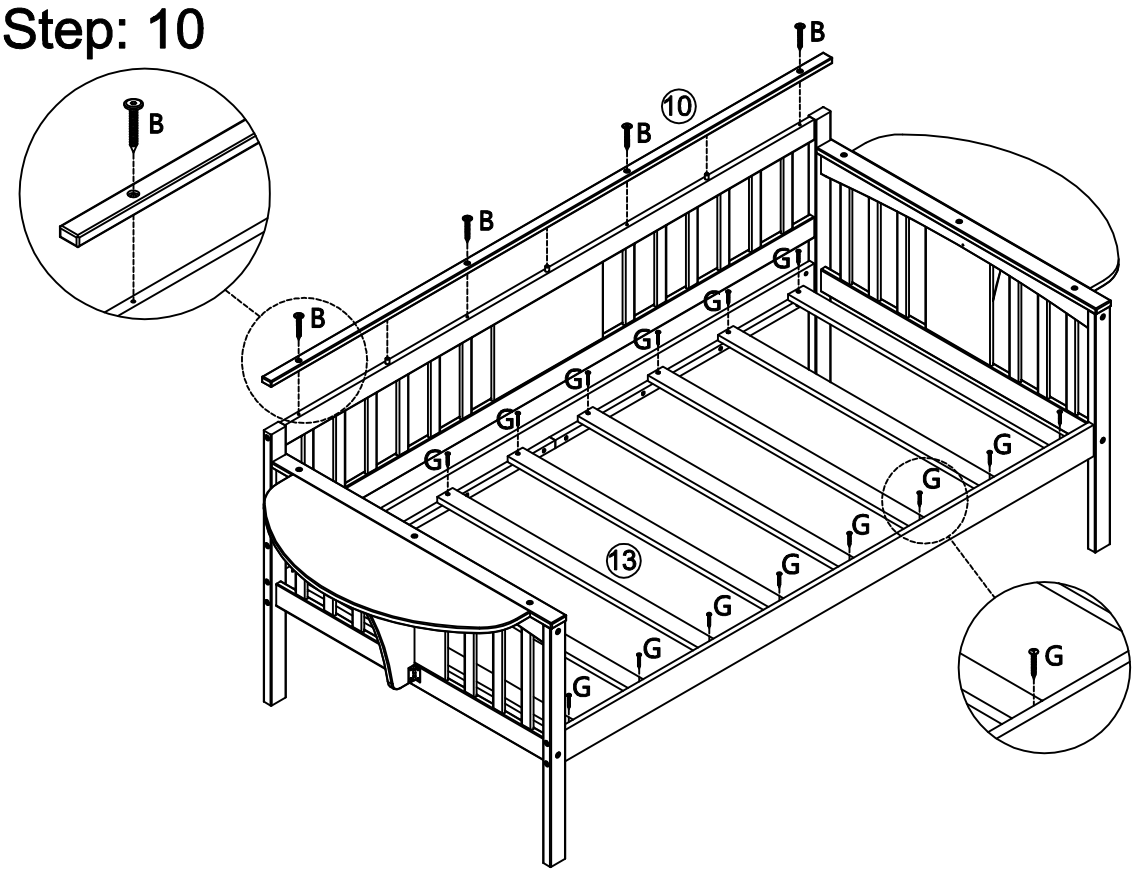

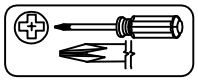

B	Qty 04	G	Qty 16	Z	Qty 01

Step: 11

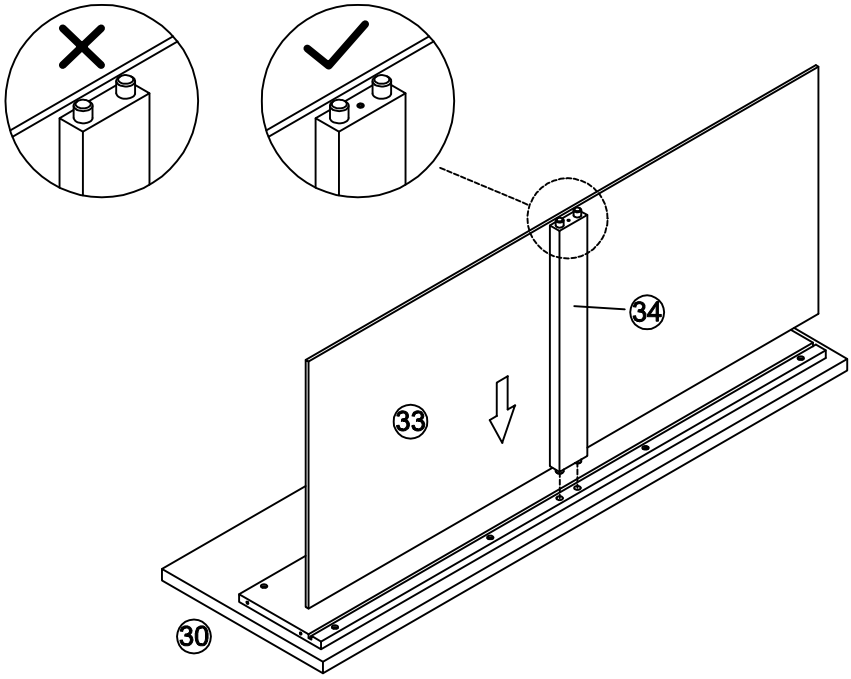

Step: 12

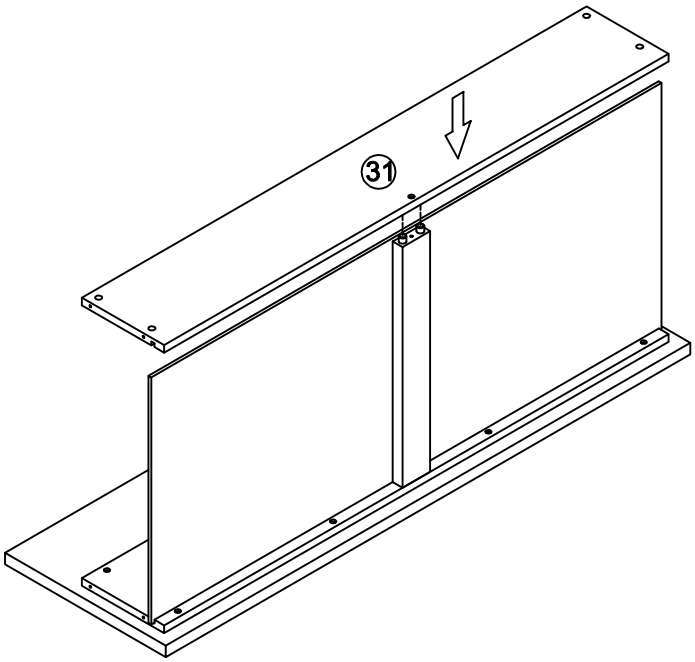

Step: 13

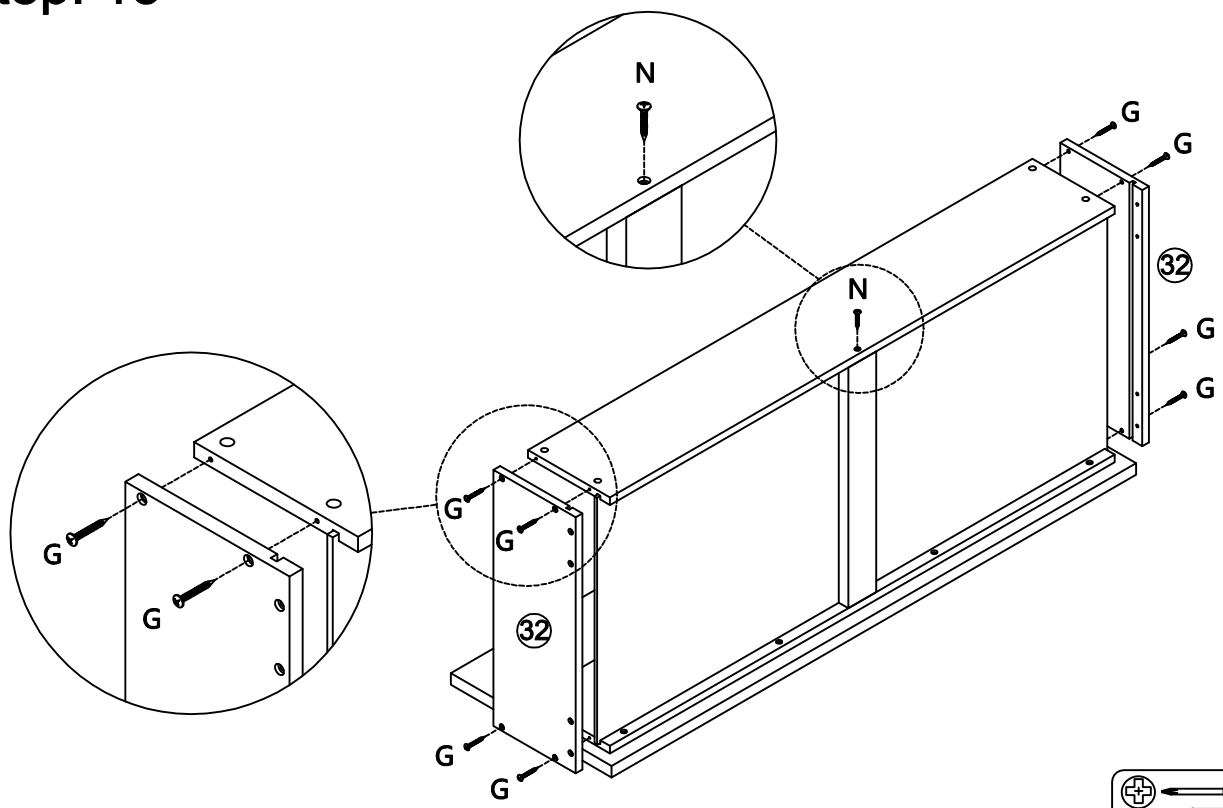

	Qty
G	16
N	2

Step: 14

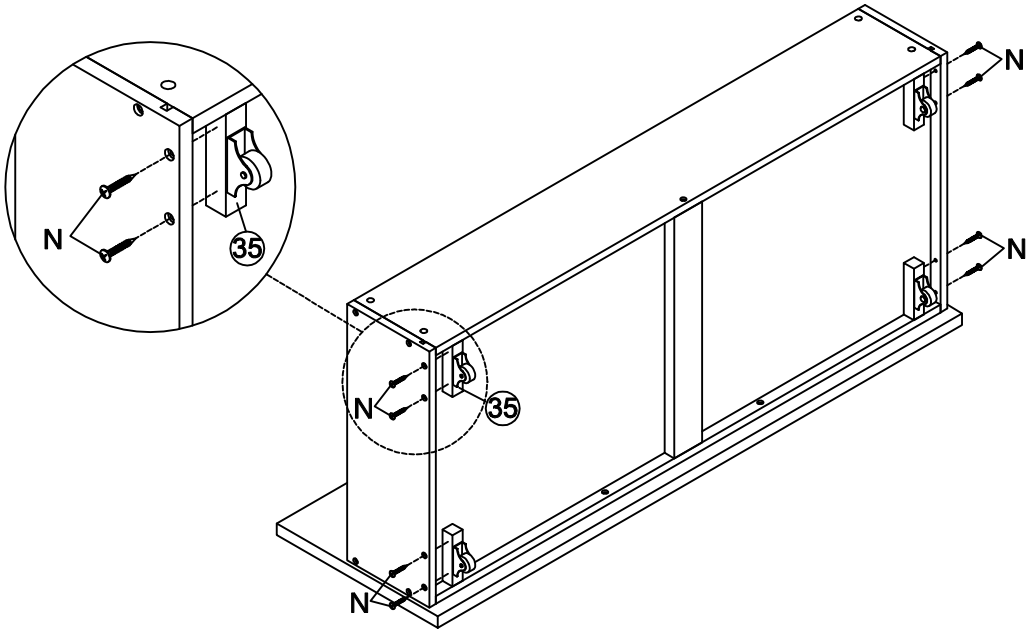

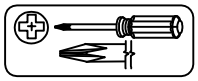

		Qty
N		16
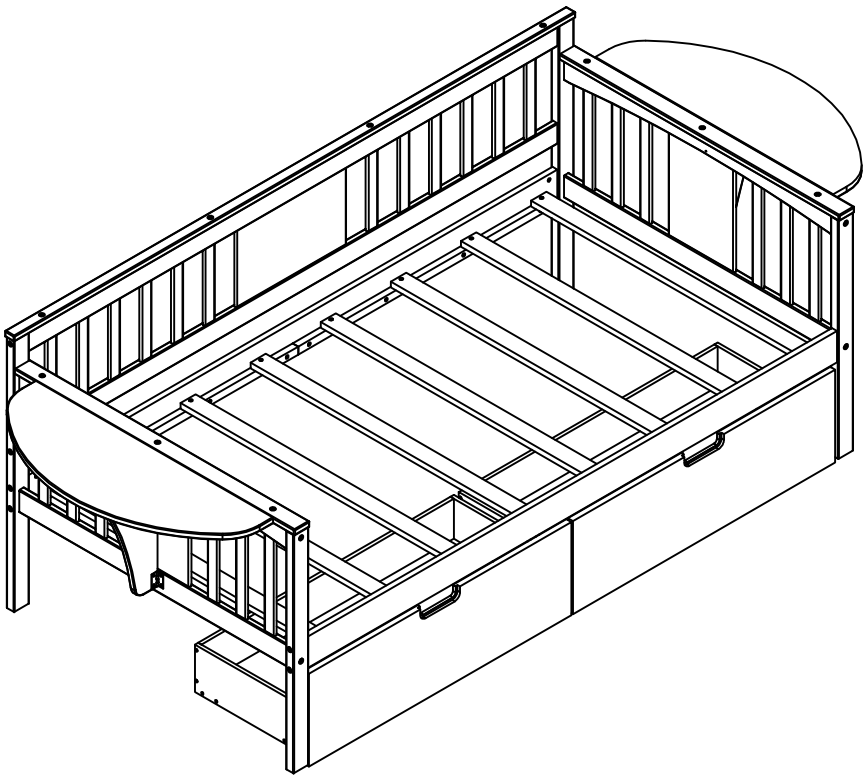
Step: 15