Assembly Instructions

Caution : You must read this before you proceed

Care & Maintenance



- Not for commercial use. For residential use only.
- Furniture may scratch floors. We recommend using furniture pads to protect your floors.
- Do not put hot items directly on furniture surface.
- Do not clean furniture with harsh cleansers or polish.
- Do not place furniture under direct sunlight.
- Do not place furniture near heating or cooling vents.
- Do not write on furniture without a padded barrier to protect the surface.
- Do not place furniture outside . For indoor use only.
- Stains may be removed with mild soap solution and damp cloth.
- Children should not climb or jump on the furniture.



- Dust and pick-up spills using a clean, non-colored, lint-free cloth.

Please look in table top for hardware packs and legs.
Sets often ship in multiple boxes and may arrive a day or two apart.

End Table: N842P491824

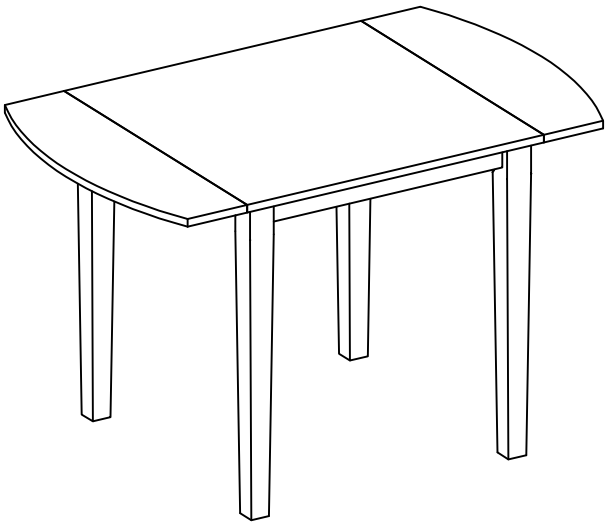

Parts list

Label	Picture	Description	QTY
Ⓐ	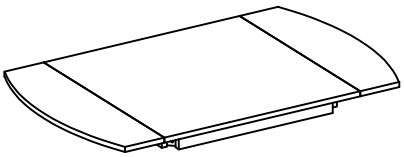	Table Top	1
Ⓑ	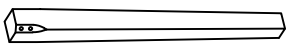	Table Legs	4

Hardware

Label	Picture	Description	QTY
①		Bolts (Ø5/16" x 60mm)	8
②		Spring Washer (Ø5/16"x13mm)	8
③		Flat Washer (Ø5/16"x16mm)	8
④		Allen Key (M4x58mm)	1

Assembly Preparation

Before Beginning Assembly

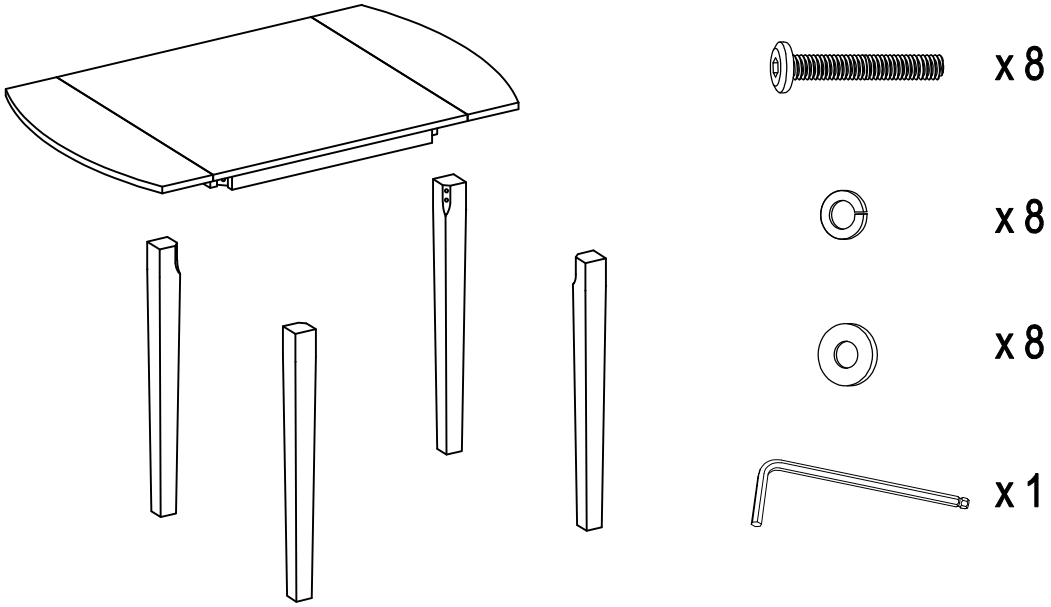

- Read instructions, cover to cover-
- Have 2 adults on hand for assembly-
- Do not assemble on flooring or carpet-
- Assemble on a clean non-marring surface (packing foam)-
- Save all packaging until finished-

Assembly Preparation

Over view

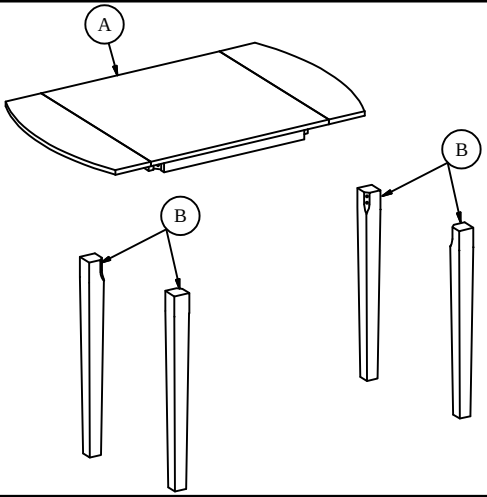

This table has multiple parts and may require up to some 30 minutes to assemble. To give you an overview of the table parts, the above picture is to help you put the various parts into perspective. Please read through the instructions below to familiarise yourself with the parts and steps before assembly.

Step 1

Push the support bar outward to brace the two sides of the table.

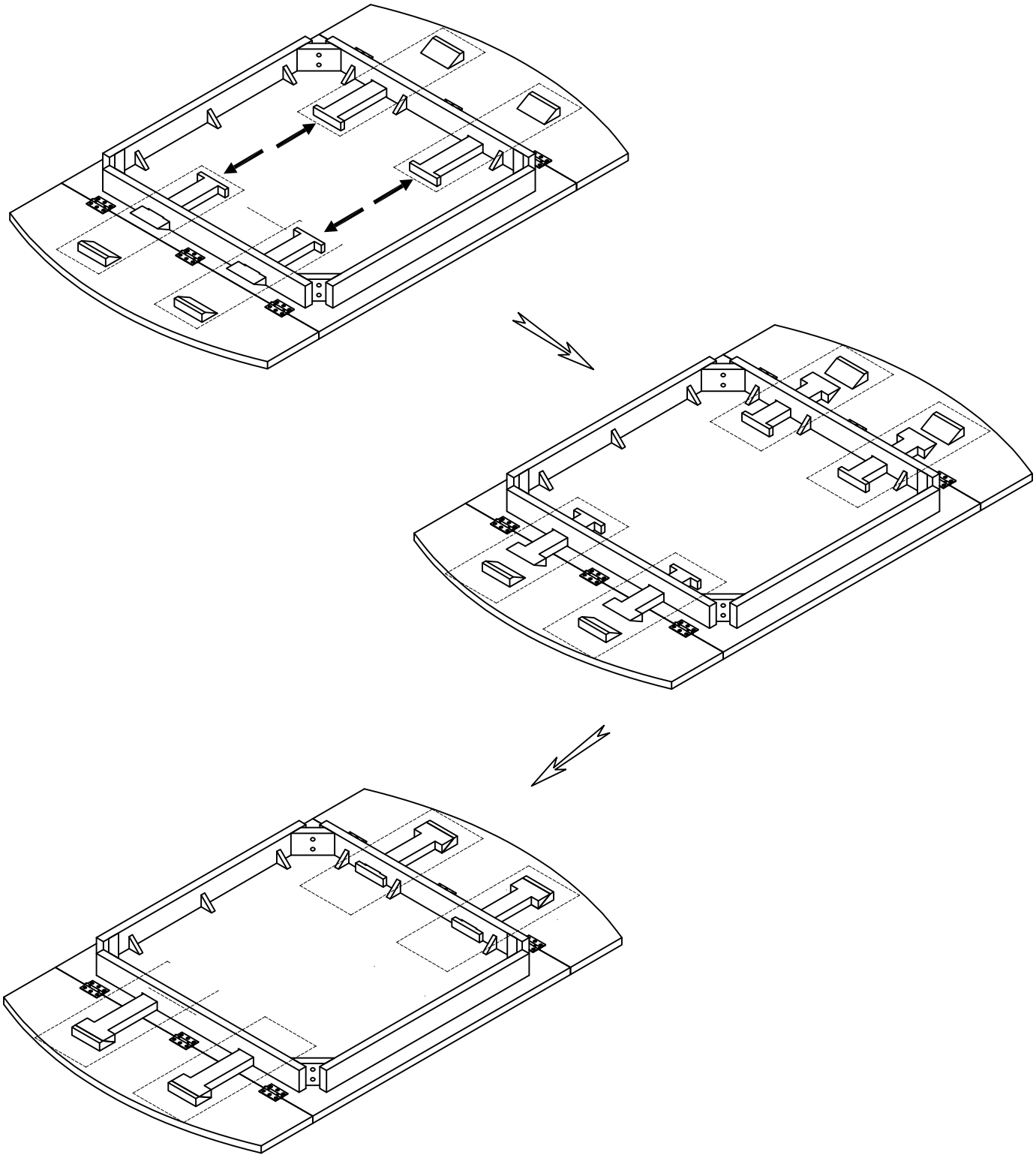

Step 2

Attach the Table Legs (B) to the Table Top (A) by using Spring Washers ②*8, Flat Washers ③*8 and Bolts ①*8 with Allen Key ④*1.

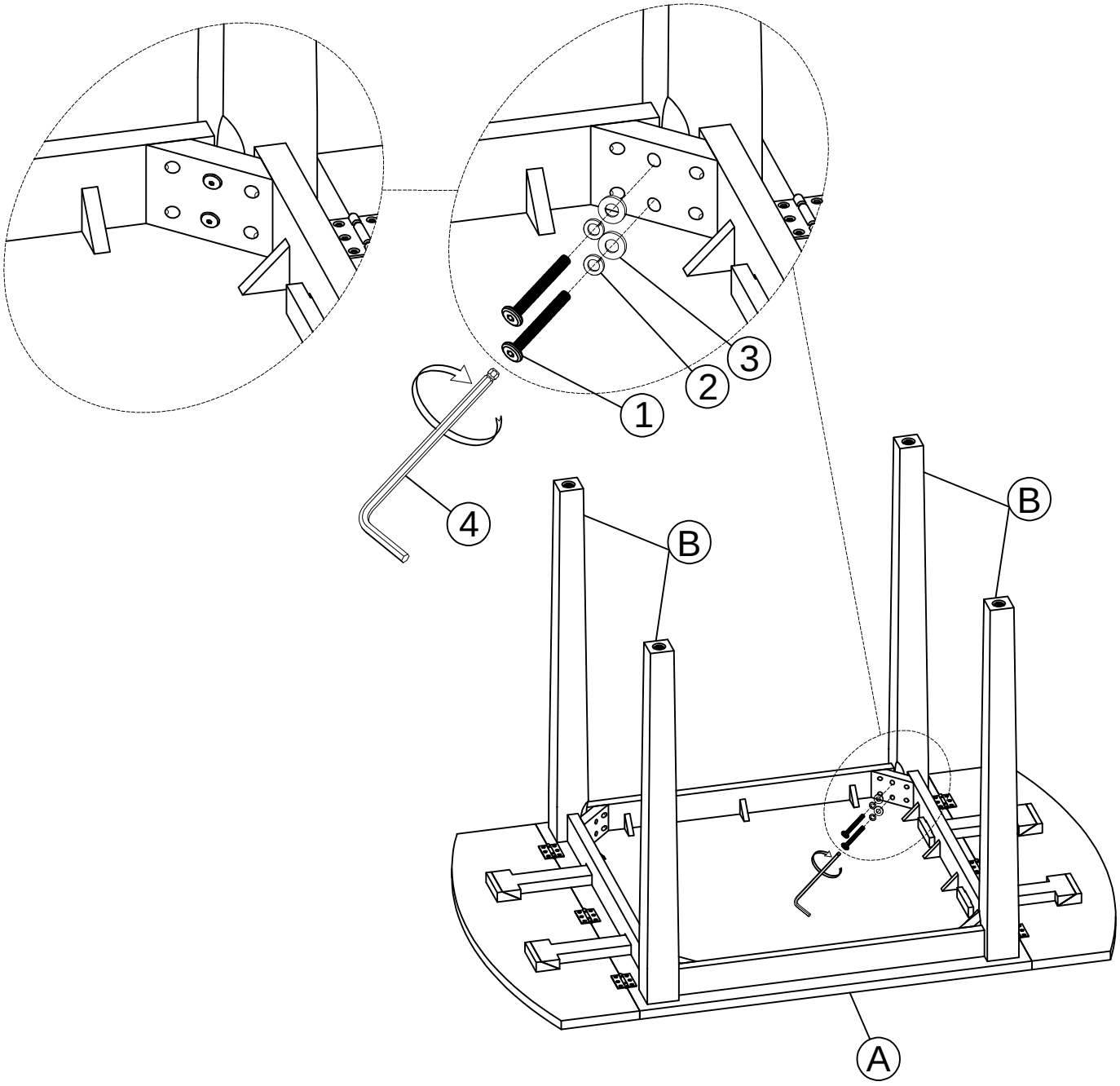

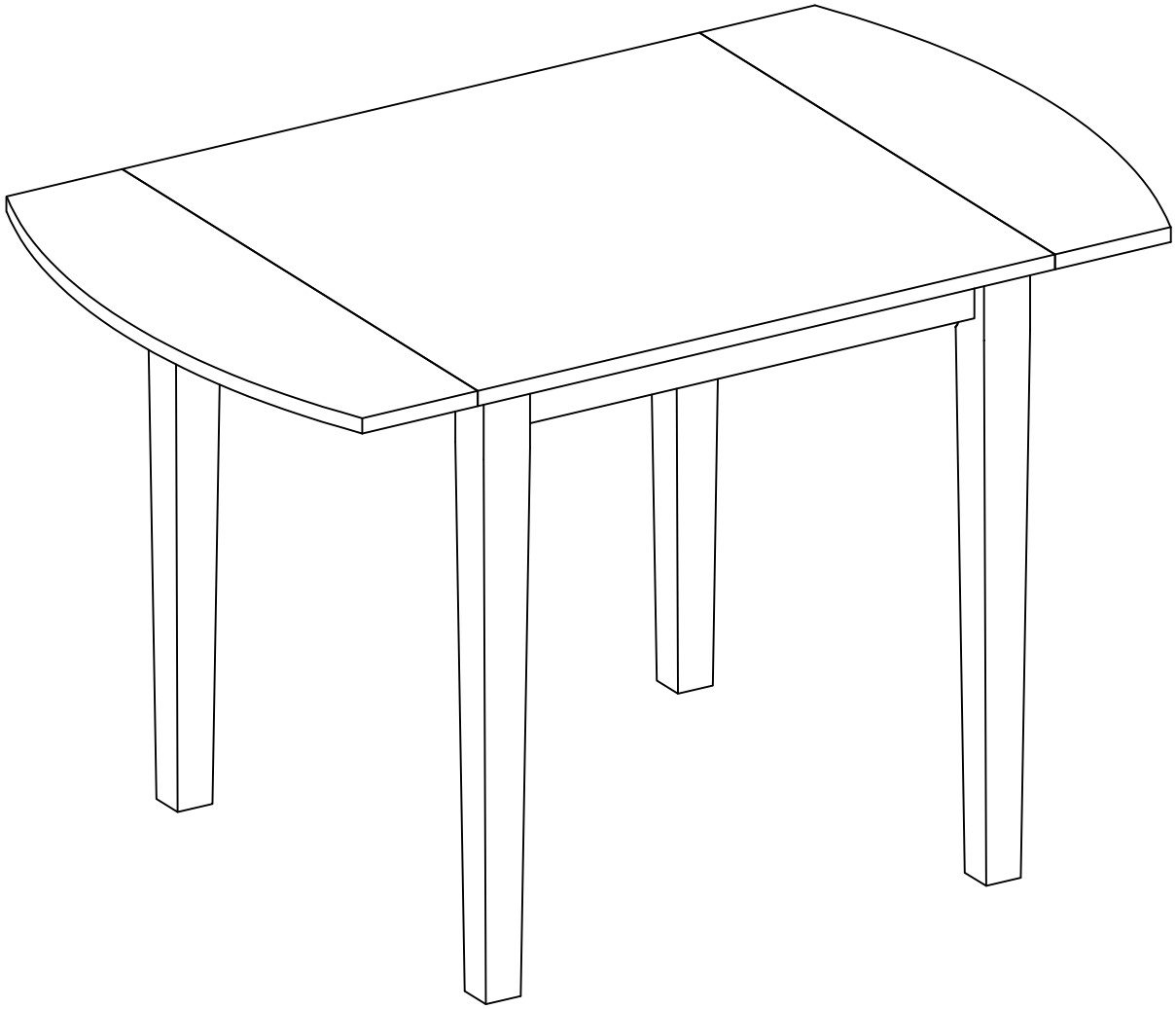

Inspect the Table and make sure all parts are adequately connected.
Adjust the Levelers to desired height to avoid wobbles.
Your Table is ready for use.
This Table can only be used on a flat, level surface.