YH2139 INSTALLATION INSTRUCTION

Please Scan the QR code to watch the installation video. If you have any questions, please feel free to contact us through the order page.

Installation Steps:

1. Install the mounting bracket.
2. Remove the protective film from the surface of the light fixture. Avoid using knives or sharp tools to prevent scratching the fixture or damaging the wire insulation.
3. Test circuit: Connect the power wires with a temporary wire to test if the light is working properly before installing it to the ceiling.
4. Installation: Fix the lamp body to the mounting bracket, and connect the power wires with the connecting terminals.
5. Turn on the power and double-check; the installation is complete.

Warning!

1.Installation should be performed by a professional.
2.To prevent electric shock, please turn off the power before installing, repairing, or cleaning the light fixture.
3.This light fixture operates within a 110V to 265V range only.
4.Do not install the light fixture in damp conditions.
5.Keep the light fixture away from acidic and corrosive materials.

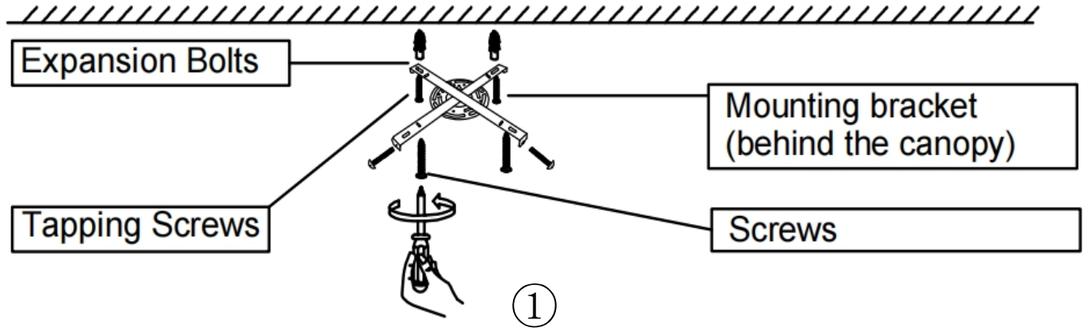

①

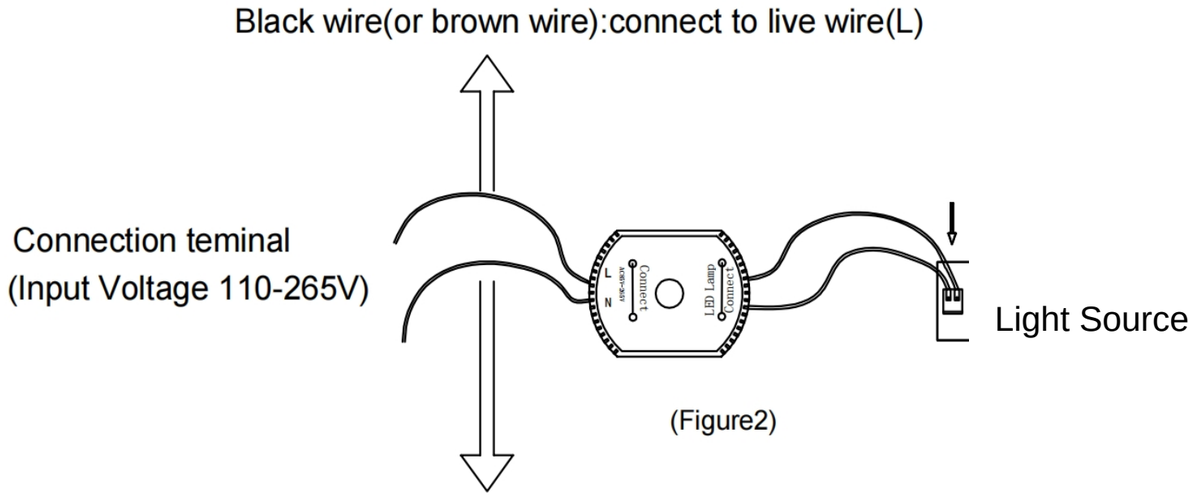

(Figure2)

②



③