DeerValley®

DV-1F52102Pro	Apex	One-Piece Toilet
PRODUCT MODEL	SERIES NAME	PRODUCT CATEGORY



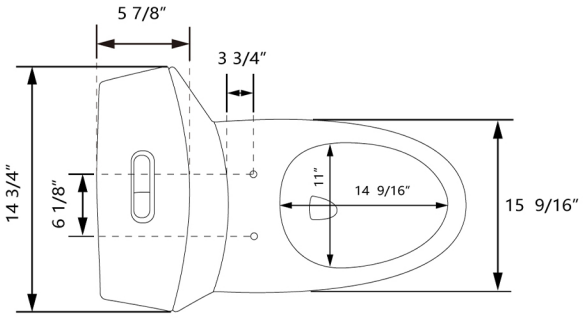

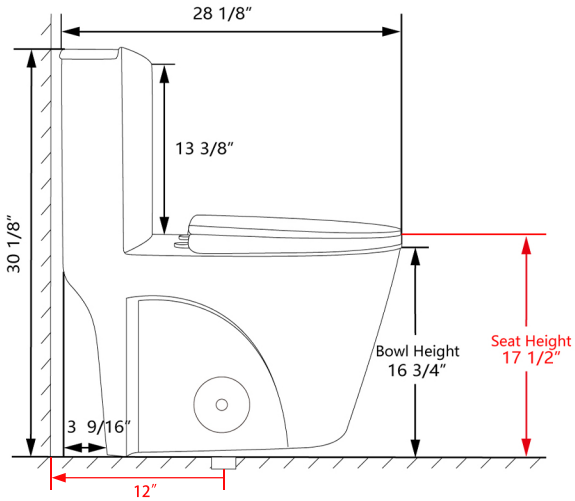

FEATURES

- Solid ceramic construction
- Upgraded fully covered seat
- Fully glazed, non-porous finish
- Easy-to-clean, skirted trapway
- Quick-release, soft-close seat
- Siphon dual flush 1/1.28 GPF
- ADA-compliant seat height: 17 1/2"

SPECIFICATIONS

- Material: Ceramic
- Dimensions: 28 1/8" × 15 9/16" × 30 1/8"
- Seat Height: 17 1/2"
- Bowl Height: 16 3/4"
- Seat Shape: V-shaped
- Elongated Toilet: Yes
- Trapway Diameter: 2 3/16"
- Water Seal Height: 2"
- Weight: 108.46 lbs
- Siphon Dual Flush: 1/1.28 GPF
- Factory Flush-tested
- MaP: 500 g
- Quick-Release Seat

ACCESSORIES LIST

- Soft-Close Toilet Seat (DV-F102ProS11)
- Toilet Seat Installation Kit (DV-F102ProS01)
- Dual Push-Button (DV-F102ProV31)
- Water Fitting (DV-F102ProV01)
- Toilet Tank Lid (DV-F102ProT11)
- Seat Buffers (DV-F102ProS91)
- Wax Ring & Bolt Kit (DV-F102ProP41)
- Bolt Covers (DV-F102ProP21)
- Installation Instructions

INSTALLATION

- Floor mount
- Standard 12" rough-in

COLOR

White

service@deervalleybath.com
(312) 626-9466

1-Year Limited Warranty