WARNING!!

Furniture Tipping Risk.
Serious risk of severe or fatal crush injuries can occur from furniture tipping over if not secured.

Children like to climb on furniture and Unsecured furniture can pose a serious danger.

Please follow all instructions and install the tip-over restraints provided.

Assembly Instructions

Caution: You must read this before you proceed.

Headboard

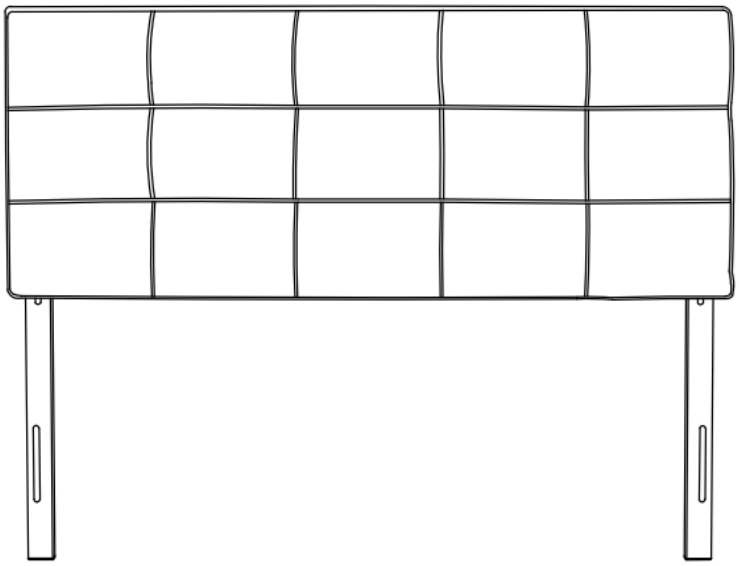

Part List

Label	Picture	Description	Qty
A	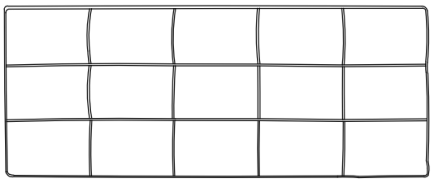	Headboard	1
B		Left Support Leg with 3 Mounting Brackets (Labelled "Left" on the bottom)	1
C		Right Support Leg with 3 Mounting Brackets (Labelled "Right" on the bottom)	1

Hardware

Label	Picture	Description	Qty
①		Bolt (M8x20mm)	9
②		Spring Washer	9
③		Washer	9
④		Nut	5
⑤		Allen Wrench	1
⑥	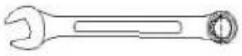	Solid Wrench	1
⑦		Screw (16mm Self Tapping)	2
⑧		Screw (50mm Self Tapping)	2
⑨		Metal Bracket	4
⑩		Restraint Strap	2
⑪		Screwdriver (Not provided)	1

Assembly Preparation

Before Beginning Assembly:

Unpack and place all parts for clear visibility.

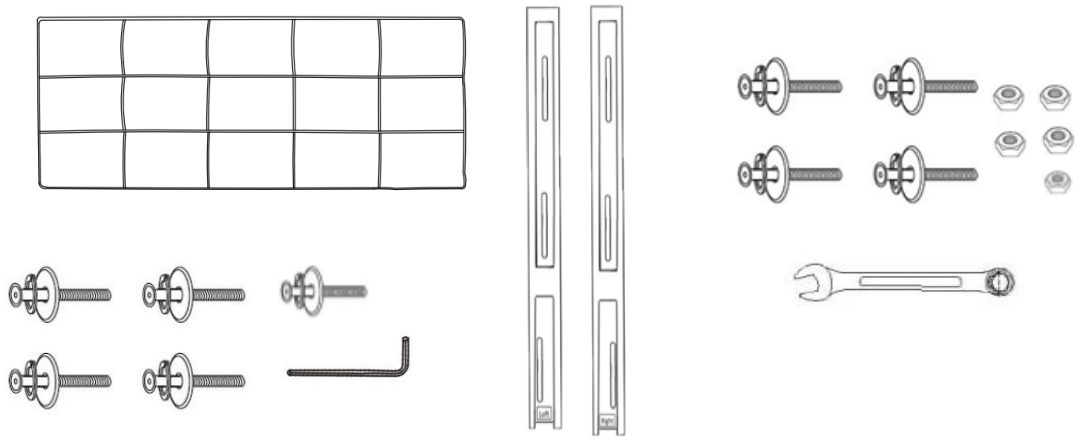

- Read instructions, cover to cover-
- Have 2 adults on hand for assembly-
- Do not assemble on flooring or carpet-
- Assemble on a clean non-marring surface (packing foam)-
- Save all packaging until finished-

Assembly Steps

Overview

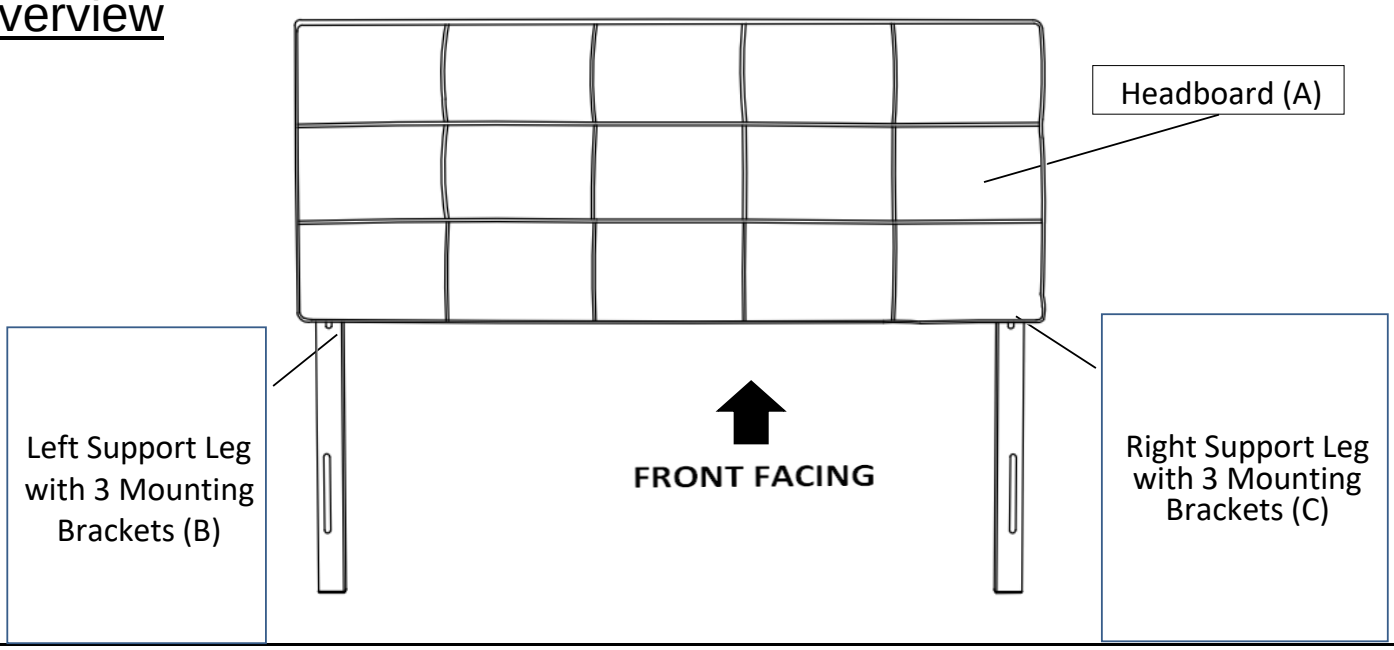

This Headboard has multiple parts and may require up to 30 minutes to assemble. To give you an overview of the Headboard parts, the above picture is to help you put the various parts into perspective. Please read through the instructions below to familiarise yourself with the parts and steps before assembly.

Step 1

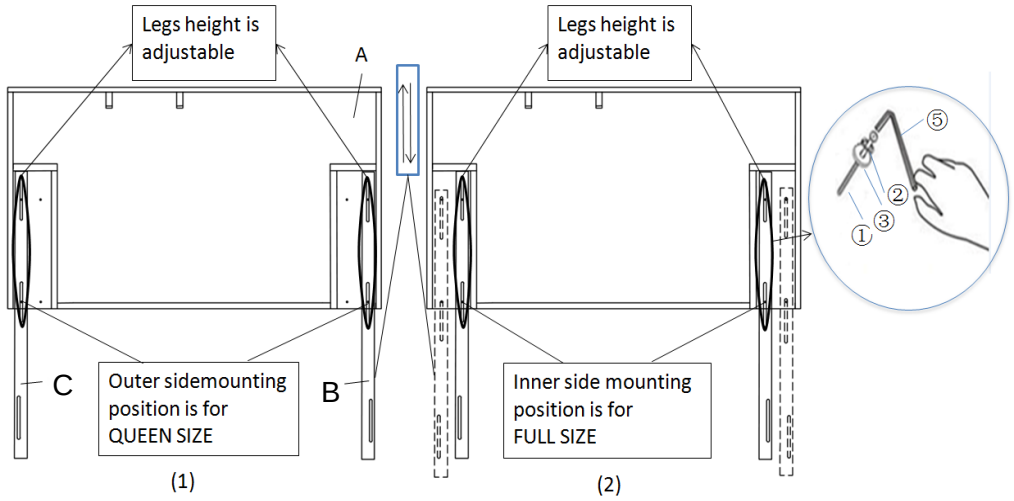

Put the Headboard(A) onto a flat table or panel.
With assistant to your adult partner, one person hold the Headboard(A) and another person hold the Support Leg(B), align the mounting position on Headboard(A) to the top and middle mounting positions on Left Support Leg(B).
Attach Left Support Leg(B) to Headboard(A) using Bolts(①), Washers(③), and Spring Washers(②) with Allen Wrench(⑤).
Queen Size assembly as shown in Picture(1); Full Size as shown in Picture(2)
Do not fully tighten the Bolts.
Repeat the same steps to install the Right Support Leg(C).
The final height of the Headboard may be adjusted to your own need.

To assemble the Headboard to Mattress Support Frame

Step 2

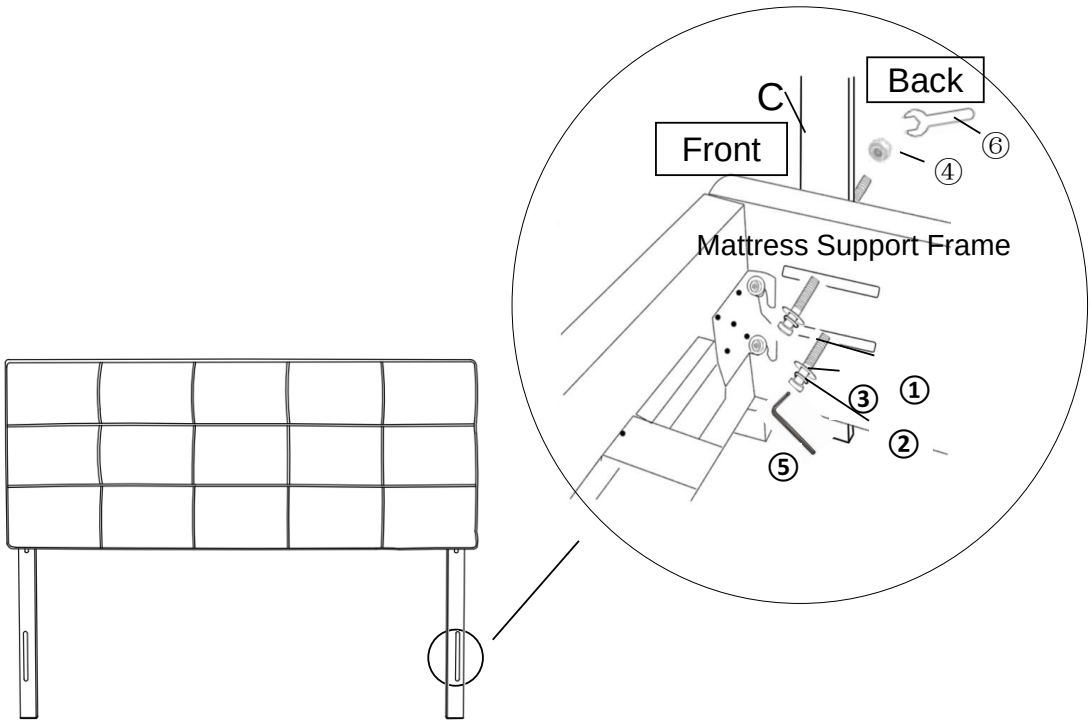

To assemble the Headboard to your platform:
With assistant to you adult partner.
Attach the Headboard to the Mattress Support Frame using Bolts(①), Washers(②), Spring Washers(③) and Nuts(④) with Allen Wrench(⑤) and Solid Wrench(⑥).
Please install the Bolts from the FRONT TO BACK of the Headboard.

Step 3

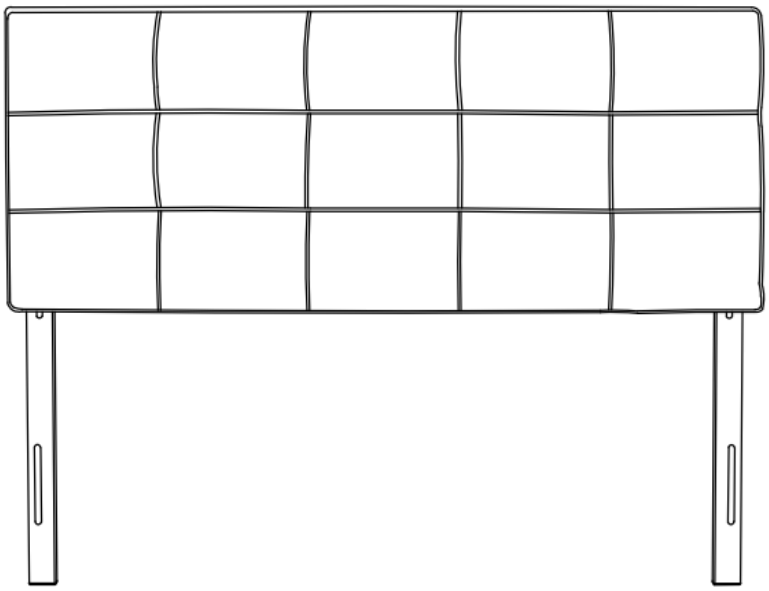

Make sure all parts are connected and securely locked into position.
Your Headboard is ready for use.
This Headboard can only be used on a flat, level surface.

WARNING

Serious or fatal crushing injuries can occur from tipping furniture. To help prevent tip-over: ALWAYS secure this furniture to the wall using a Safety Restraint Device. See product instructions for more ways to help prevent furniture tip-over.

Headboard Restraint Device Installation Instruction

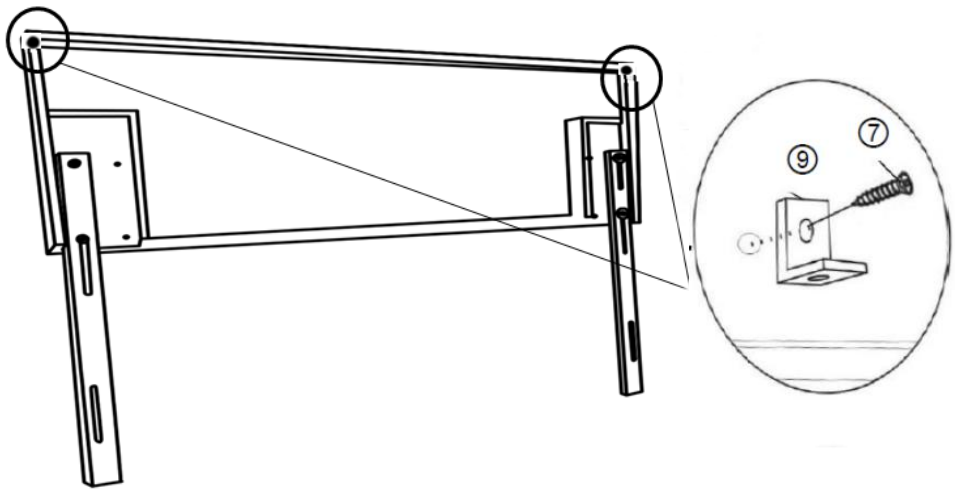

Firstly, turn back the Headboard.
Locate the two marks on the product. Then, Attach Metal Brackets(⑨) to the back of Headboard(A) using Screws(⑦) with Screwdriver(⑪) as shown above.
Make sure two parts are connected and securely locked into headboard.

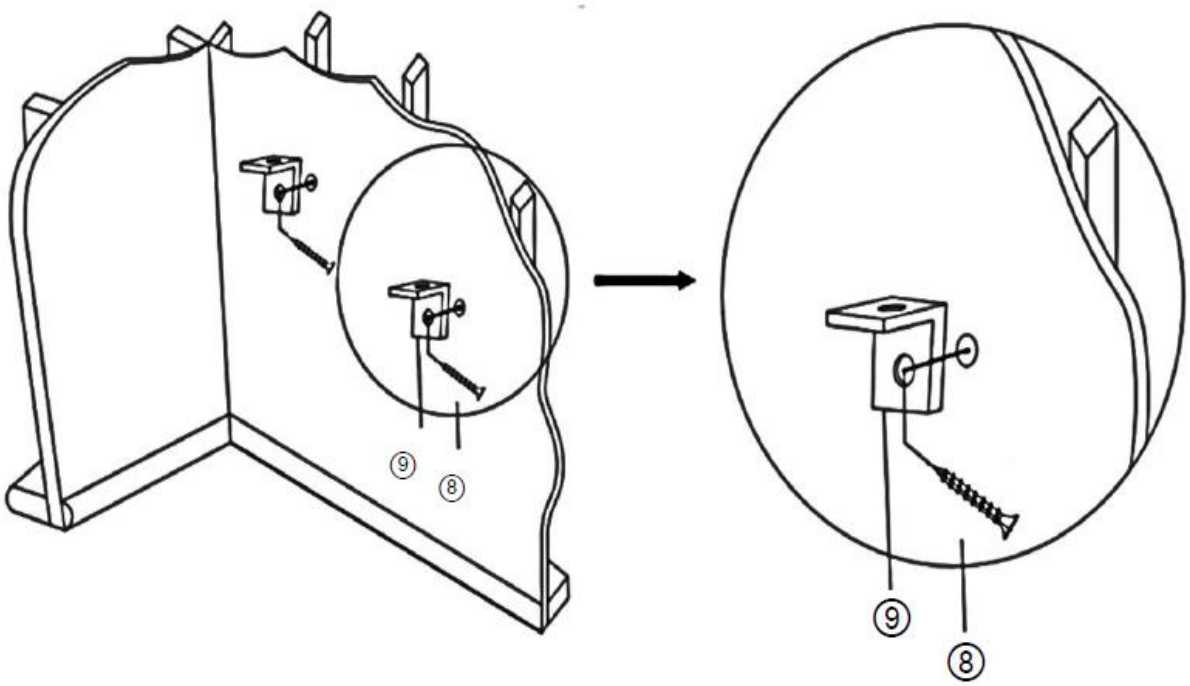

Put the Headboard against the wall where desired and mark the location for the Metal Brackets(⑨) to be the same height as the top of the Headboard.
Attach Metal Bracket(⑨) to the wall where you marked using Screws(⑧) with Screwdriver(⑪).
Repeat this process with the other Metal Bracket(⑨).
Note: The Metal Brackets need to be secured to solid, load bearing surface. Please use a Stud Finder(not supplied) if needed to locate the Wall Frame.

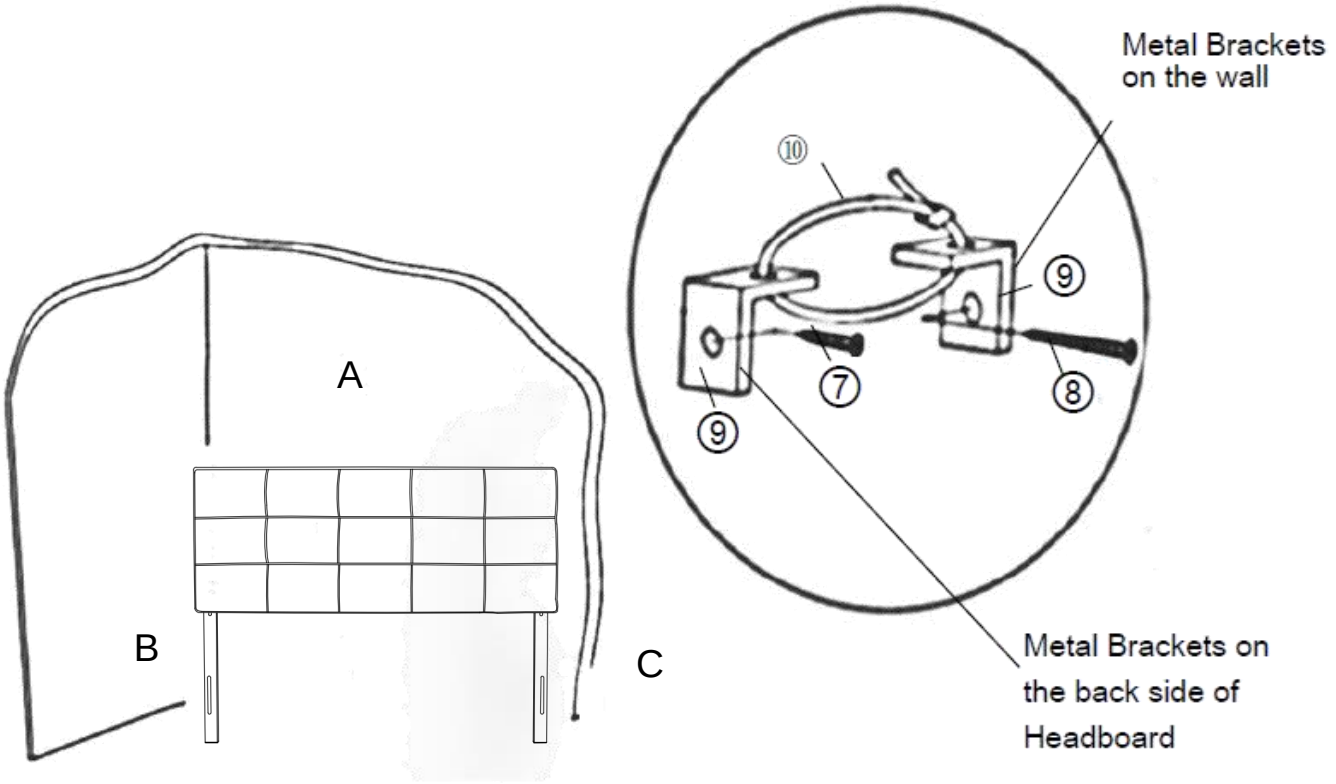

Move the Headboard back against wall.
Pull the Restraint Straps(⑩) through the Metal Brackets(⑨) on the wall andHeadboard(A) one by one, and pull the Restraint Straps(⑩) tight.
Headbaord Restraint Device is installed and Headboard is ready for use.
Note: The strap between the Headboard(A) and Metal Brackets(⑨) on wall should be within 3.5".

Care & Maintenance

	● Furniture may scratch floors. We recommend using furniture pads to protect your floors.
	● Do not put hot items directly on furniture surface.
	● Do not clean furniture with harsh cleansers or polish.
	● Do not place furniture under direct sunlight.
	● Do not place furniture near heating or cooling vents.
	● Do not write on furniture without a padded barrier to protect the surface.
	● Do not place furniture outside . For indoor use only.
	● Not for commercial use. For residential use only.
	● Stains may be removed with mild soap solution and damp cloth.
	● Children should not climb or jump on the furniture.
	● Dust and pick-up spills using a clean, non-colored, lint-free cloth.