Widespread Lavatory Faucet With Brass Pop-Up

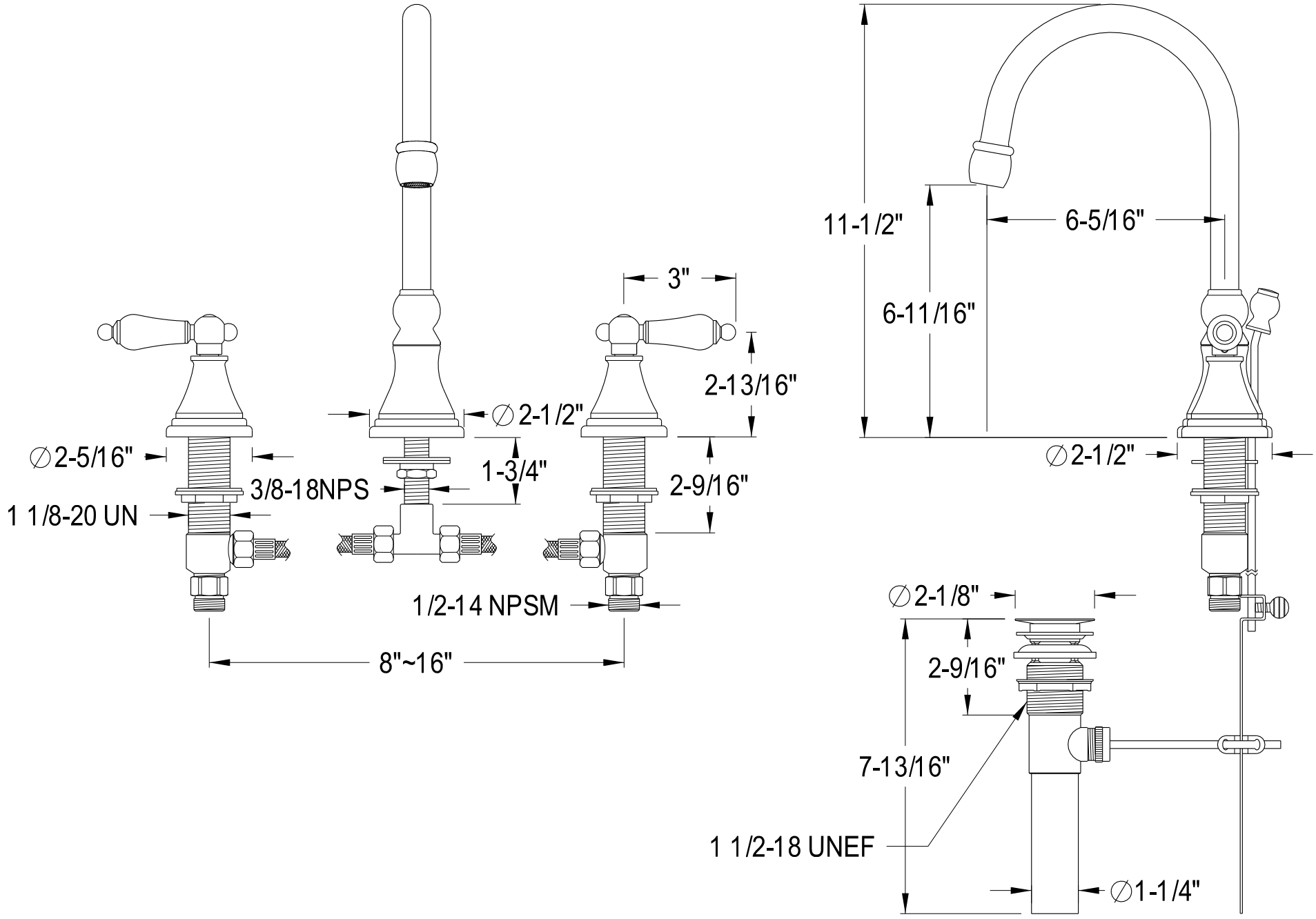

2018-03-A