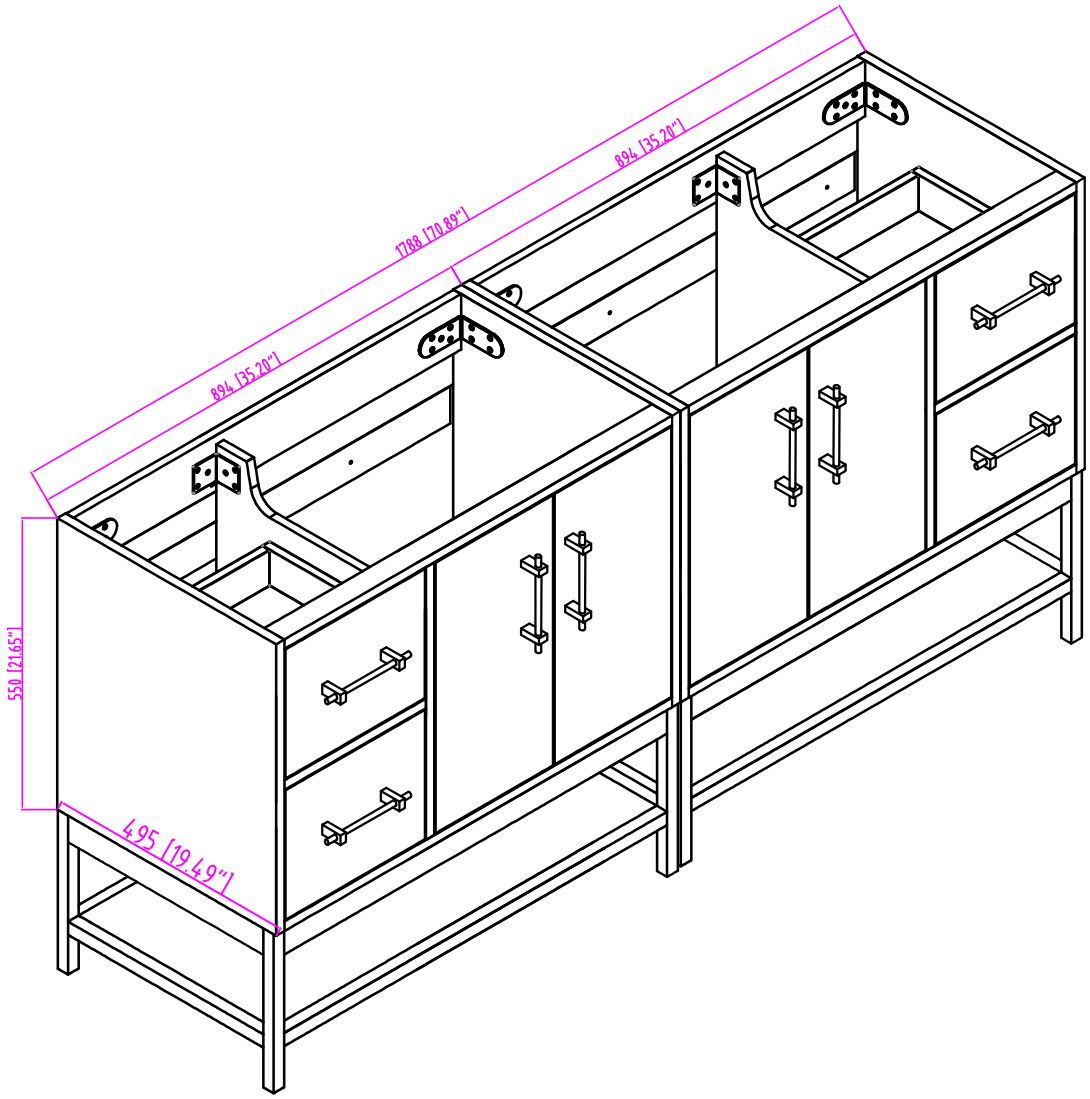

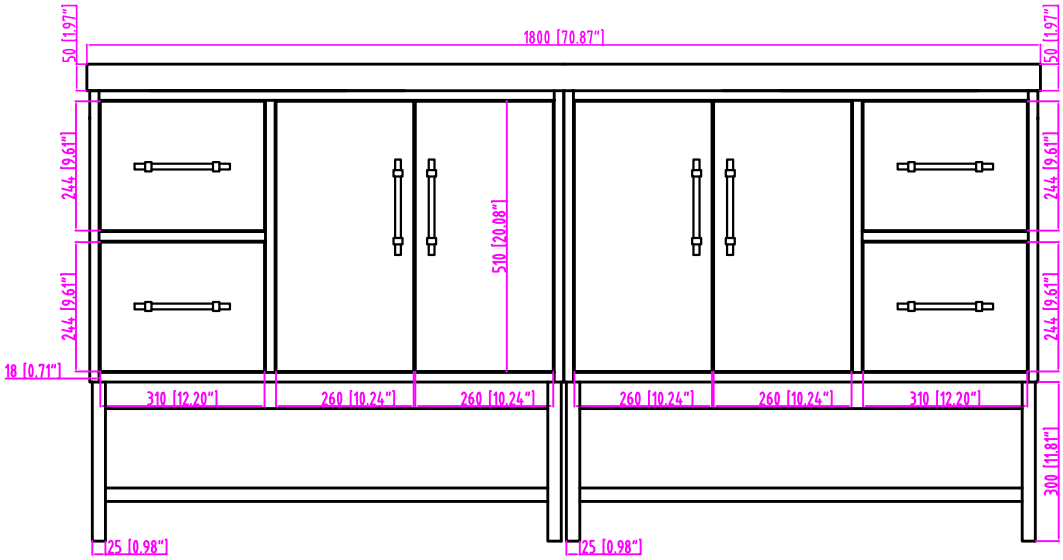

Victoria-72D (36L+36R)