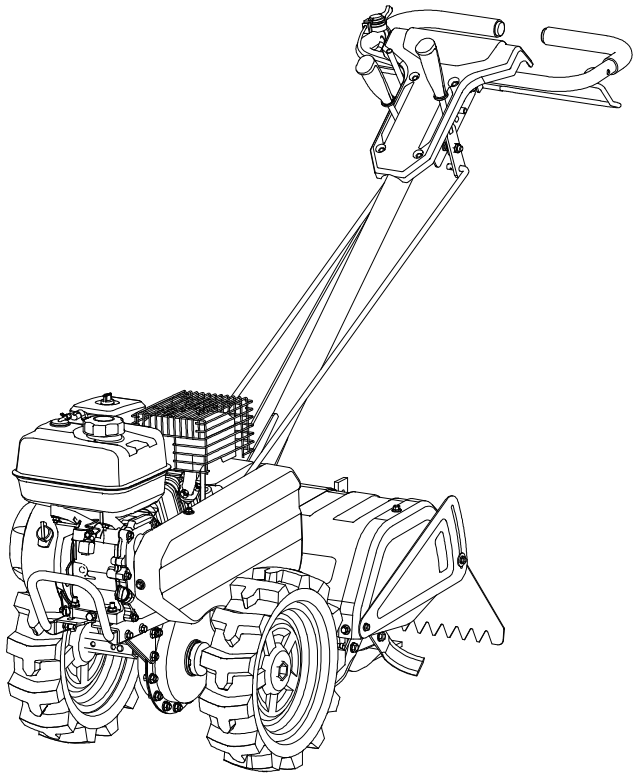

NOVUS

17 in. REAR TINE TILLER

NV17DRTG

Product No: A040060001

QUICK START GUIDE

2026 V01

NOVUS® | PERFORMANCE PRODUCTS

Jackson, Wisconsin
Website: www.novuspowerequipment.com
Email: Support@novuspowerequipment.com
Toll-Free Phone: 800-409-7802

2026 V01

KNOW YOUR PRODUCT

Read this operator's manual before operating your tiller. Familiarize yourself with the location and function of the controls and features. Save this manual for future reference.

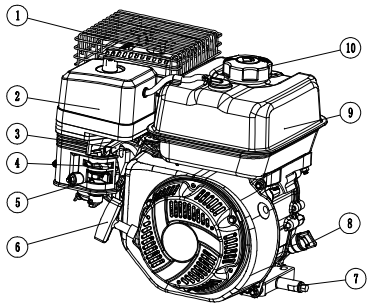

Engine

1	Muffler guard
2	Air filter
3	Throttle Lever
4	Choke lever
5	Fuel valve
6	Recoil starter handle
7	Oil drain
8	Oil fill cap/dipstick
9	Fuel tank
10	Fuel tank cap

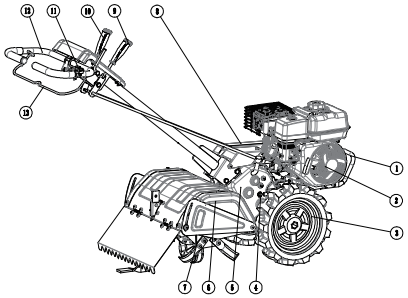

Tiller

1	Bumper
2	Engine
3	Wheel
4	Oil level sight glass
5	Transmission
6	Tines shield
7	Tines
8	Belt guard
9	Tine rotation select handle
10	Wheel drive select handle
11	On /off switch & throttle control
12	Upper handlebar (operation handle)
13	Clutch control bar

READ AND UNDERSTAND THE OPERATOR'S MANUAL AND ALL SAFETY WARNINGS BEFORE USE

Quick Start Guide Contents
- Unpacking / Package Contents
- Assembly Instructions
- Starting and Operating Procedures

If you require assistance during setup or operation of your new tiller, please contact our customer support team toll-free at (800) 409-7802 or email at support@novuspowerequipment.com

ASSEMBLY

Your tiller requires some assembly. This unit ships from our factory without oil.
It must be properly serviced with fuel and oil before operation.
If you have any questions regarding the assembly of your tiller, call our Technical Support Team at 1-800-409-7802. Please have your serial number and model number available.

UNPACKING

1. Remove any banding and open carton from top.
2. Remove all loose packed items and packaging inserts.
3. With assistance, remove the tiller from the carton.
4. Remove all additional loose items from packaging materials. Do not discard packaging until you have confirmed all components are present.

Parts Included

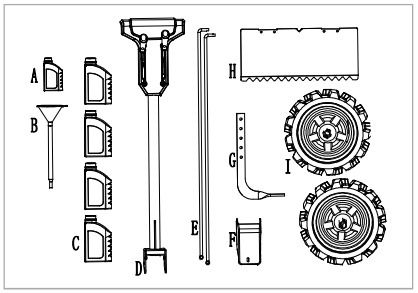

A	Engine oil bottle
B	Oil funnel
C	4 × Transmission oil bottle
D	Lower handle tube
E	2 × Shift linkage rod
F	Control cover plate
G	Drag stake
H	Tine shield
I	2 × Wheel

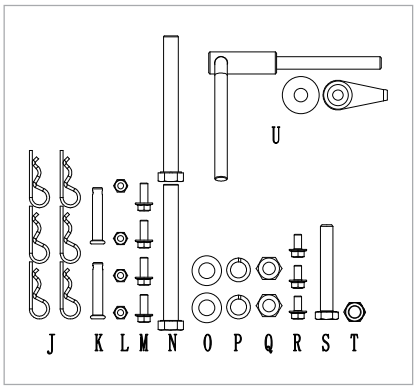

J	6 × Hair pin
K	2 × Clevis pin
L	4 × Hex flange nut M6
M	4 × Hex flange bolt M6×16
N	2 × Bolt M12×110
O	2 × Washer 12
P	2 × Split lock washer 12
Q	2 × Nut M12
R	3 × Bolt M6×12
S	Bolt M10×70
T	Nut M10
U	Handle height adjustment bolt

Tools Kit Content: Tools Required

17 mm / 19 mm Wrench – Qty 1
13 mm / 16 mm Wrench – Qty 1
12 mm / 14 mm Wrench – Qty 1
8 mm / 10 mm Wrench – Qty 1
Phillips screwdriver – Qty 1

Install the Wheels

Prior to the installation of the wheel & tire assemblies (1) identify the Right & Left side wheel.

Note: Proper orientation is with the tread pattern forward facing "∧" (see below).
With assistance, lift the tiller unit upwards, install the wheel and tire assemblies onto the axle shaft. Align the hole furthest from the wheel & tire assembly with the hole in the axle shaft and insert clevis pin (2), secure with cotter pin (3).

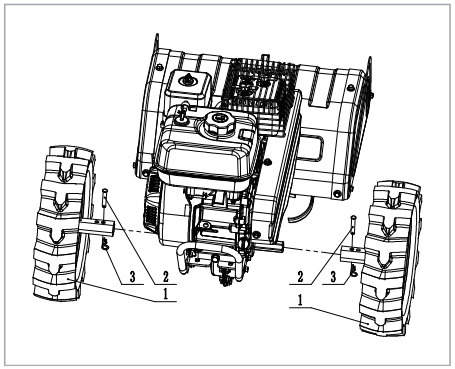

Attach Lower Handle

Using the two M12*110 Bolts (2), split lock washers, washers and nuts (3,4,5) install the lower handle tube (1) as shown. (19mm wrench & adjustable wrench)

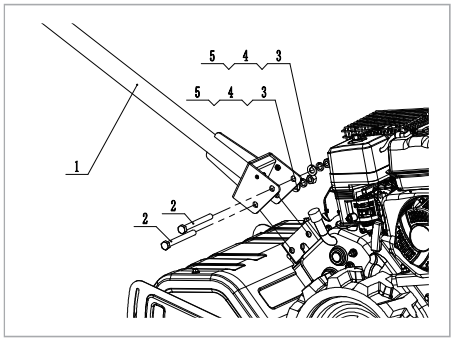

Attach Upper Handle

1. Install upper handle (1) using the bolt M10*70 (2) and lock nut M10 (3).

Note: The On/Off switch -throttle control is on the top, the tine engagement bail is below the handle. Attention must be given to ensure the cables are not twisted or caught in the linkage.

2. Install the upper handle height adjustment bolt (4) into the slotted hole of the upper handle tube. When tightening ensure the black lock nut (6) tang is engaged in the hole of the upper handle tube. (as shown)

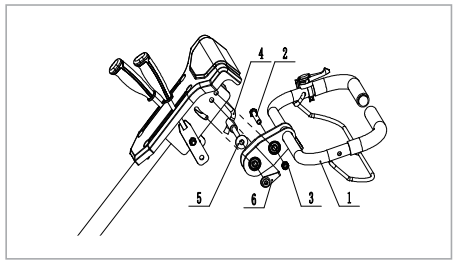

3. Secure the two shift linkage rod (1) to the upper handle bracket and the transmission case with cotter pins (2), as shown in the figure.

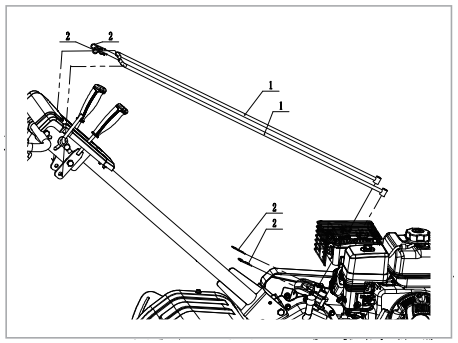

4. Install transmission cover plate (1) using 3 Bolt M6*12 (2).

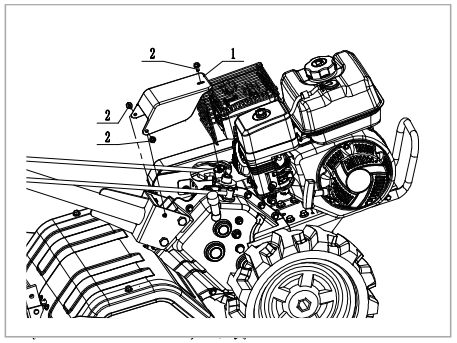

Install the Drag Stake

Remove the drag stake clevis pin, which is preinstalled in the drag stake pocket at the rear of the tiller. Insert the drag stake (1) with the foot facing back. Reinstall the clevis (2) and cotter pin (3).

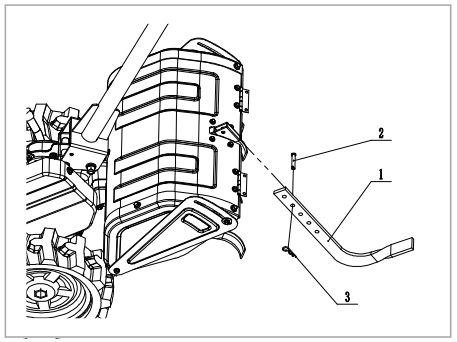

Install the Tine Shield

Install the Tine Shield (1) using 4 Bolts M6*16 (2) and 4 Lock Nuts M6(3).

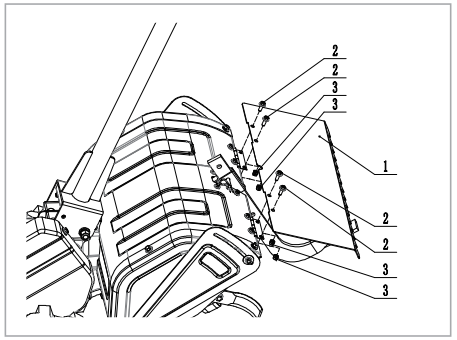

OPERATION

Add Fuel

1.Remove the fuel tank cap.
2.Slowly add gasoline to the tank. DO NOT OVERFILL.

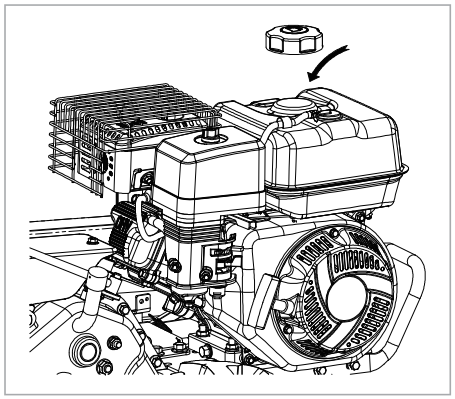

Add Engine Oil

1. Place the tiller on a flat, level surface.
2. Remove oil fill cap/dipstick to add engine oil.
3. Using a funnel, add up to 20.6 fl. oz. (600 ml) of oil and replace oil fill cap/dipstick. DO NOT OVERFILL.
4. Check the engine oil level and add as needed.

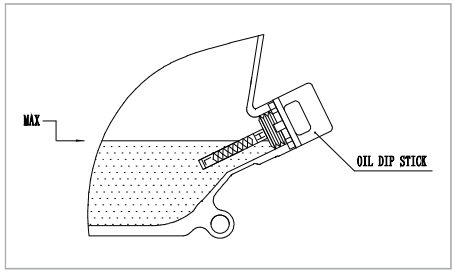

Add Transmission Oil

The transmission is shipped without oil from the factory.
Place the tiller on a level surface. Using the supplied funnel (B) add 4.25 quarts (136 oz) of 10W-30 oil (C) at the transmission fill plug location.

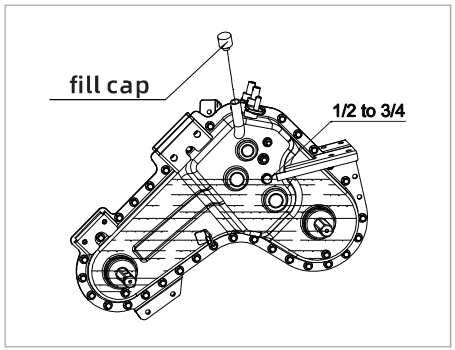

Starting the Engine

1. Check the oil level and add oil if necessary.
2. Make certain the tiller is on a flat, level surface.
3. Place both shift handles (Tine & Wheel drive) into the neutral position.
4. Turn engine ON / OFF switch to the “ON” position (located on right side upper handlebar).
5. Rotate the throttle lever clockwise until it stops in the high-speed position.
6. Slide the Choke lever on engine fully to the left (Full Choke position).
7. Slide Fuel Valve fully to the right (Open position).
8. Pull the starter handle slowly until resistance felt, then pull rapidly.
9. Once the engine starts, slide the choke lever to the off position.
10. Control engine speed with the throttle control located on the upper handle.

Wheels Drive Operation

After starting the engine, pull the wheel drive select handle backward and pull the clutch control bar upward—the wheel will move forward. Release the clutch control bar and the wheels will stop drive.

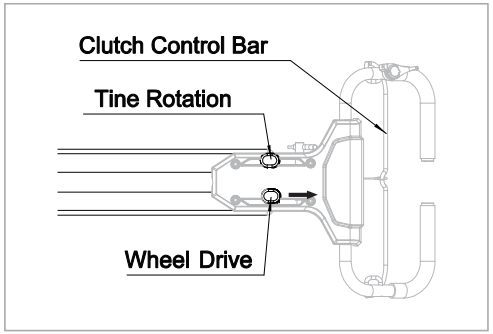

Push the wheel drive select handle forward and pull the clutch control bar upward—the wheels will move backward. Release the clutch control bar and the wheels will stop drive.

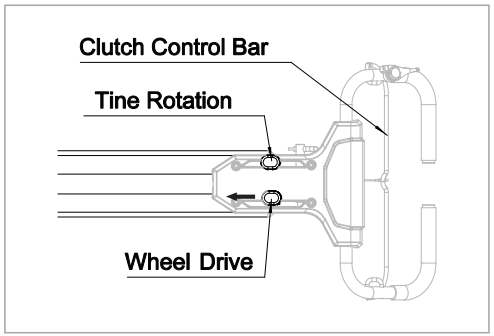

Tines Rotation Operation

Forward Rotary Tilling: When tilling soft soil, place the wheel drive select handle in “F” position (pull backward) and the Tine rotation select handle in “F” position (Push forward). Pull the clutch control bar upward—the wheels will move forward and the tines will rotate for forward tilling.

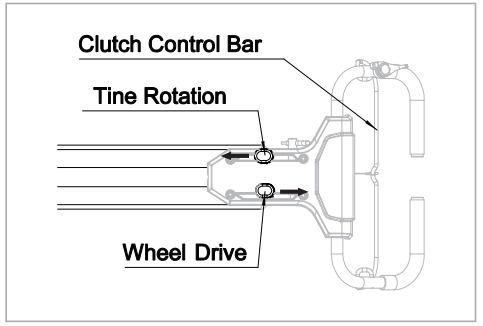

Reverse Rotary Tilling: When tilling hard soil, place the wheels drive select handle in “F” position (Pull backward) and the Tines rotation select handle in “R” position (Pull backward). Pull the clutch control bar upward—the wheels will move forward and the tines will rotate for reverse tilling.

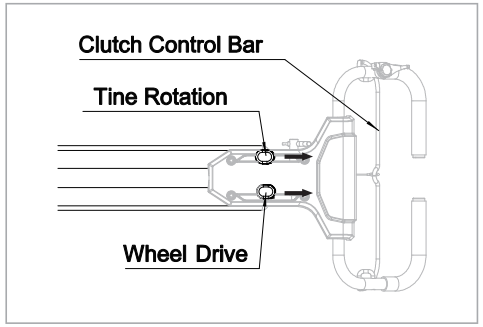

Releasing the clutch control bar, both the wheels driving and tines rotation will stop.

Stopping the Engine and the Tiller

NOTE: In an emergency, rotate the engine On-Off switch clockwise to the “Off” position.

1. To stop the wheels and tines, release clutch control bar.
2. Shift all select handle (wheel drive and tiller tine rotation) to the neutral position.
3. To stop the engine, slide the throttle lever back(towards the operator) to the slow/idle position.
4. Rotate the engine On-Off switch clockwise to the “Off” position.
5. Slide the fuel valve lever to the “OFF” position.