VERSA30

S-611WK

STAINLESS STEEL
HANDMADE SINGLE BOWL KITCHEN SINK



DIMENSIONS

30" x 19" x 10"

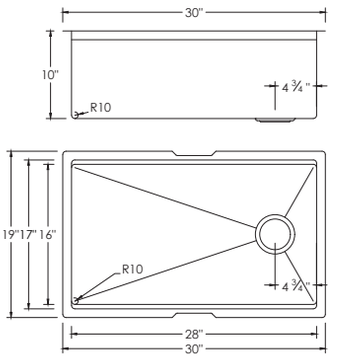

INCLUDED ACCESSORIES

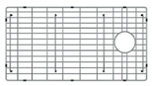
G-611
GRID


ST-03
STRAINER


A-06
COLANDER


A-902BK
DRYING RACK


A-917
CUTTING BOARD

RECOMMENDED ACCESSORIES


A-916BK
DRYING MAT


A-908
SERVING BOARD


A-912
CUTTING BOARD


S-01N
SOAP DISPENSER

SURFACE FINISH

BRUSHED STAINLESS STEEL

DRAIN HOLE SIZE



CORNER PROFILE



RADIUS 10mm

INSULATION

COATED + RUBBER PADS

BOWL DEPTH



SIDE DRAIN HOLE



INSTALLATION OPTIONS


UNDERMOUNT

MATERIAL

Premium 16 gauge stainless steel with 18/10 chrome-nickel content. The 18% of chrome content provides durability, maximum protection against rust and a beautiful satin finish. The 10% of nickel content provides excellent strength and hardness.



16 GAUGE
STAINLESS STEEL

PRODUCT DIMENSIONS

Overall Dimensions	30" x 19" x 10"
Internal Dimensions	28" x 17" x 10"
Left Basin	-
Right Basin	-
Drain Openning Size	3 1/2"

LUXURY BASKET STRAINER

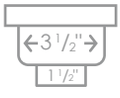

CABINET SIZE

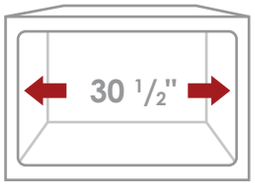

MINIMUM
INTERNAL SIZE

GARBAGE DISPOSAL

Stylish® sinks have on standard 3 1/2" drain opening that can fit any garbage disposal unit. The sink structure is well designed to withstand any heavy garbage disposal unit.



WARRANTY

This product is covered by a limited lifetime warranty. Consult our website for complete details.



STANDARDS COMPLIANCE

cUPC certified
ISO 9001 certified

PRODUCT CARE

Rinse and dry your sink with a clean soft cloth, working with, not a cross, the grain. We recommend the use of a mild solution of water and vinegar to remove any mineral deposits that may have built up on your sink. Use mild non-abrasive liquid cream cleaners that do not contain chlorine, sodium hypochlorite or hydrochloric acid to help maintain the original appearance of your sink. Ensure that you thoroughly rinse your sink and wipe it dry. We recommend the use of a stainless steel grid that fits inside the bottom of the sink bowl and protect the sink from scratches.

Stylish International Inc. www.stylishkb.com stylish.international.inc care@stylishkb.com +1-855-789-5352

Products and specifications shown are subject to change without notice. Please contact our technical support at care@stylishkb.com for any further queries, replacement parts requests, etc. **©2021 Stylish® all right reserved.**