ITEM NO.:MCBL

LED MEDICINE CABINET
BEVEL DESIGN

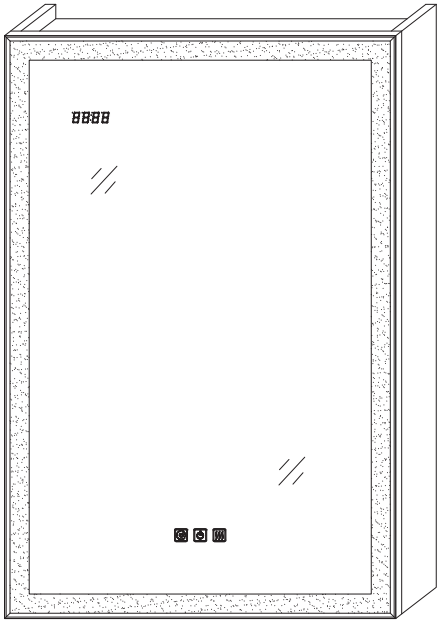

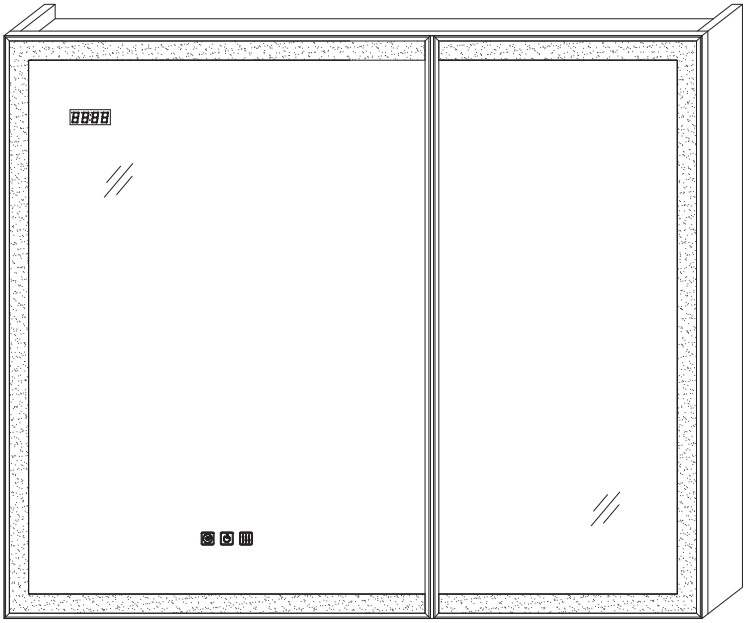

MCBL-US V1.3-2535

INSTALLATION INSTRUCTION

Please read this instruction carefully before the installation and keep it for the future use and the warranty.

BRAND SUPPORT

Thank you for choosing us !
We are a brand that specializes in producing mirrors professionally.
Your suggestions are important to us. We would greatly appreciate it if you could share your ideas with us so that we can improve our products and better satisfy our customers.

⚠ Manufacturer warranty for 2 years from date of purchase.

General Guidelines

1. Please carefully read the following instructions and use the product accordingly.
2. Keep this manual and pass it on when transferring the product.
3. This summary may not include every detail of all variations and considered steps.

If you need further information or assistance, please feel free to contact us at our official email address:

✉ *homefixassist@outlook.com*

Warnings

1. Children are not allowed to assemble the product. During assembly, please ensure that small parts are kept out of the reach of children, as they may pose a choking hazard if swallowed or inhaled.
2. Keep plastic packing bags out of reach of children to prevent suffocation or other potential dangers.
3. Avoid using sharp objects or corrosive chemicals on the product, as they can cause damage to both the product and the user.

Use Tips

1.Please use in safe voltage range. (100V-120V)
2.Do not strike the mirror with hard or pointed items.
3.WARNING: The installation must be performed by a qualified licensed electrician.

⚠ DANGER: Before installation, make sure the main power is cut off.

PRE-ASSEMBLY

1. Important Safety Instructions:

- Please read all instructions carefully before installing the item.
- Install by two or more adults is highly recommended.
- To connect the wires to electrical wire nuts, a qualified technician or electrician is highly recommended.
- Before installation, component addition or replacement, please make sure the main power has already cut off.
- Ensure the Install location(solid stone / brick walls) can bear the weight of the complete fitting.
- To prevent injury, the mirror must be installed according to this instruction.

2. Before Installation:

- After opening the package, please inspect the accessories according to the packing list in order to ensure the received accessories are complete.
- Ensure the installed voltage is between 100V and 120V. If the voltage exceeds 120V, please use a transformer.
- You can connect the wires directly to your wire nuts.
- Before Installing the mirror on wall, please try to plug and power the product at first, to make sure that the lighting effects and the functions mentioned in section 3 work.
- If so, you can start to install.

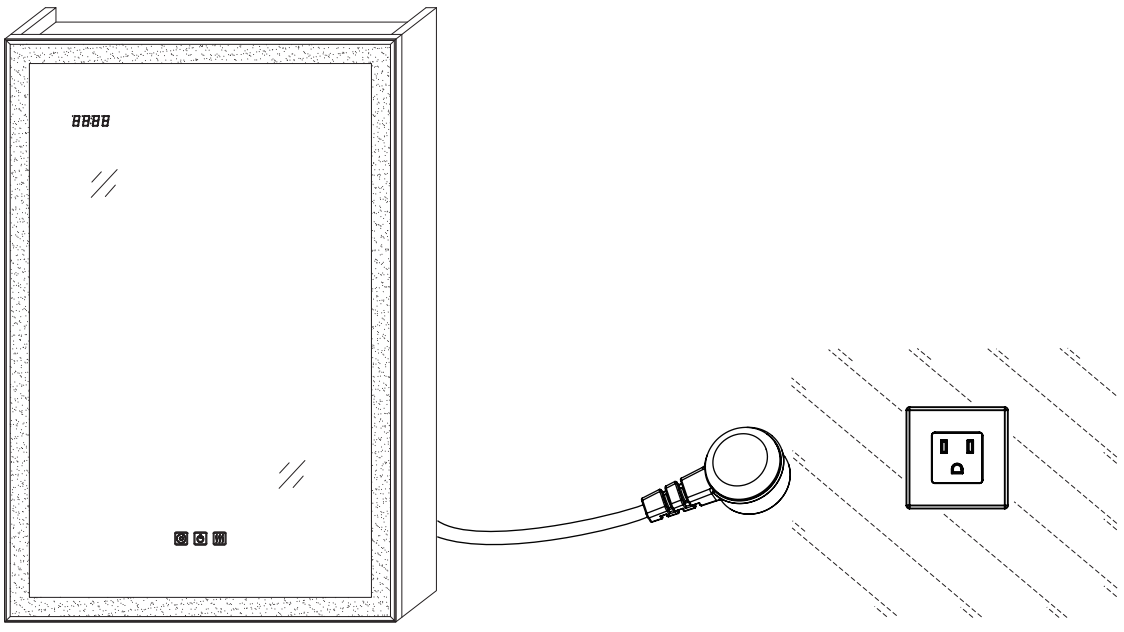

BUTTONS FUNCTION EXPLANATION

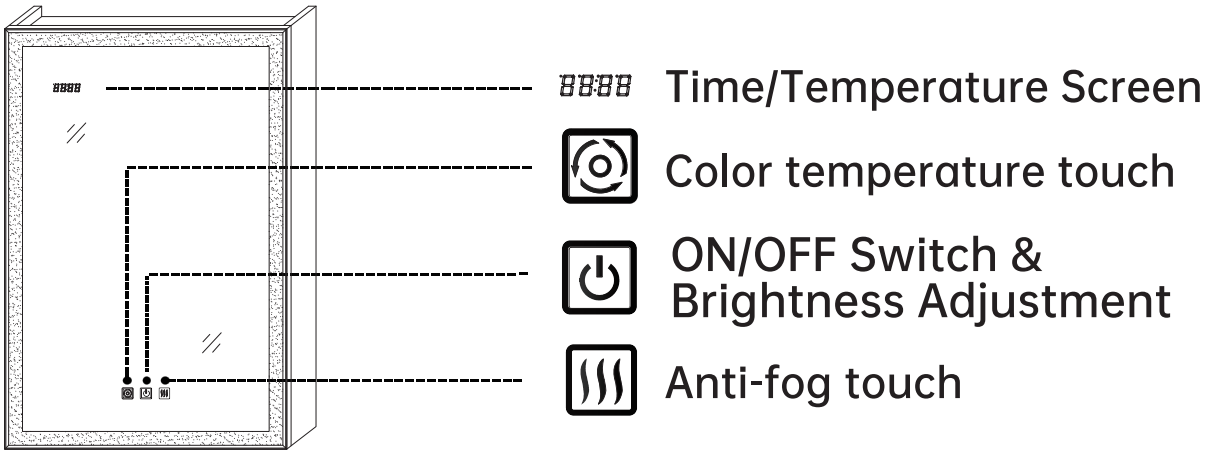

① Left button: Color temperature adjustment.

There are 3 C.T. to select, make a short press to switch them.
White light(6000K) - Natural light(4000K) - Yellow light(3000K).
Press and hold the touch to make the color temperature
stepless adjustment(6000K to 3000K).
Memory function: The color temperature will keep the last choice.

② Middle button: ON/OFF Switch & Brightness Adjustment.

Short press the button to light the mirror front lighting on or off.
Press and hold the button to make the brightness stepless
adjustment(100% to 20%).
Memory function: The light brightness will keep the last choice, hardwire Installation(wall switches)also work.

③ Right button: Anti-fog function.

Short press the button to activate or deactivate the defogging.
The demisting film will automatically turn off after heating for one hour by default. However, to avoid wasting electricity, we recommend that you manually turn off the device when it is't in use.
Press and hold this Anti-fog button for 5-8 seconds to turn off all the button's backlight. If the backlight is accidentally turned off, you can press and hold the button again to turn it back on.

④ Left/Right button: Time function. -/+

In standby state, when the lights are not turned on (off), long press the color temperature button for 5S to wake up the clock adjustment function.
At this time, the hour can be adjusted.
After 5 seconds, the minutes can be adjusted.
The color temperature key is -, and the light Brightness key is +.
In standby mode (i.e., when the cabinet is plugged in but the lights are not illuminated), long-press the Brightness control key for 5-8 seconds to toggle the clock display on or off.

ATTENTION

Not Offering

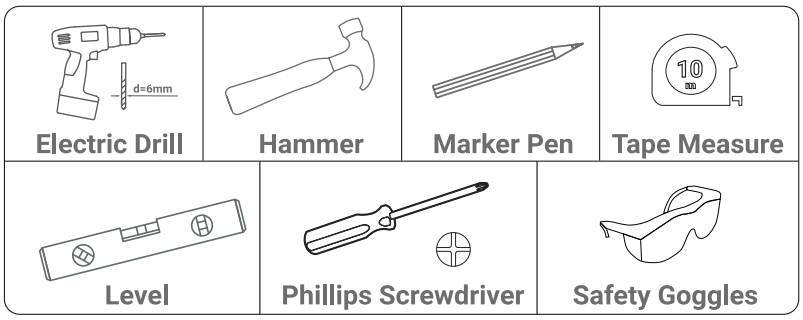



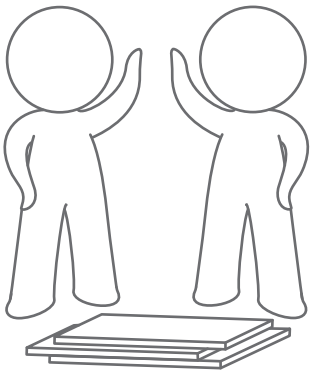



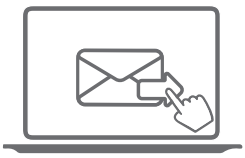

homefixassist@outlook.com









KEEP DRY

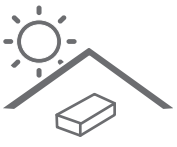

NO SUN EXPOSURE



SOFT DRY CLOTH

PARTS LIST-ARCHED

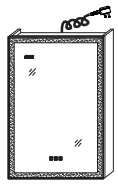 Medicine Cabinet x 1	 Bracket x 1	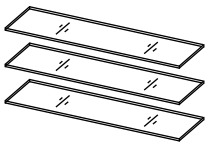 Glass shelf x 3	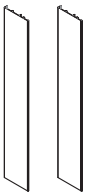 Side Panel x 2	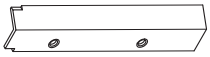 Side Panel Cover x 4
 Lower Bracket x 1	 Shelf Clip x 4	 1/4" (φ6*40mm) Ⓐ x (4+1+1)	 5/32" (φ4*40mm) Ⓑ x (4+1+1)	 (φ4*8mm) Ⓒ x (8+2)

*Taking MCBL2032 as an example.
*The quantity of A/B screws varies according to the size of the product.
*MCBL2026/2032 needs 4+1 screws, MCBL2432 needs 5+1 screws, MCBL3032 needs 5+1 screws, MCBL3630 needs 6+1 screws, MCBL4030 needs 8+1 screws, MCBL4830/5430 needs 10+1 screws, MCBL6030/7230 needs 12+1 screws.
*We offer additional 1 screws to prevent screw missing in case.
*Each piece of tempered glass requires 4 shelf clips, which we have installed inside the cabinet, while we provide 4 extra shelf clips as accessories.

BEFORE INSTALLATION

- For safety and ease of mounting, installation is recommended using two people.
- Please confirm the installation position and installation height of the hang bracket supplied, and use a spirit level to make sure the bracket be leveled. Then mark the hole positions on the wall.

METHOD 1: FOR HANGING WALLS

Method 1.1 : For Solid or Concrete Walls.

（Please refer to step 1 to step 5、9、10, P8-P11, P17.）

METHOD 2: FOR RECESSED

（Please refer to step 6 to step 10, P12-P17.）

*Taking MCBL2032 as an example.
*The spacing between each two holes is 4 in (100mm).

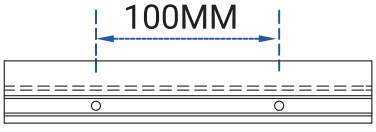

ILLUSTRATIVE GRAPH



MCBL2026/2026R
MCBL2032/2032R

"Left Skewed Installation"

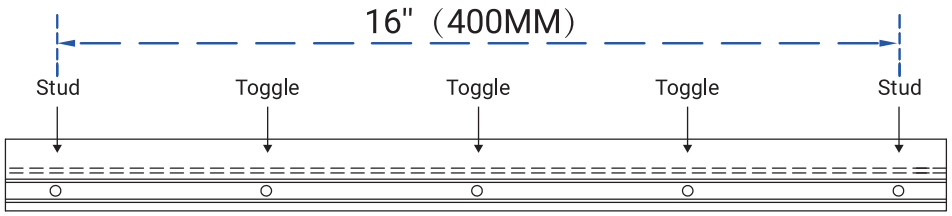

MCBL2432/2432R

"Centered Installation"

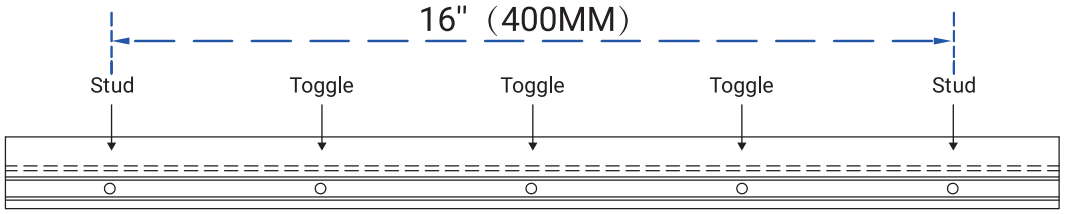

MCBL3032

"Centered Installation"

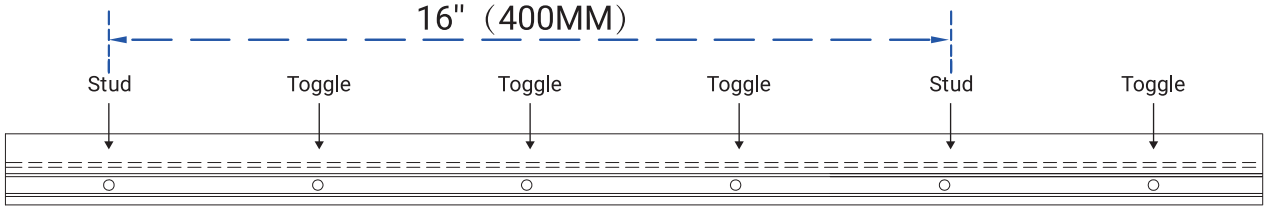

"Left Skewed Installation"

MCBL3630

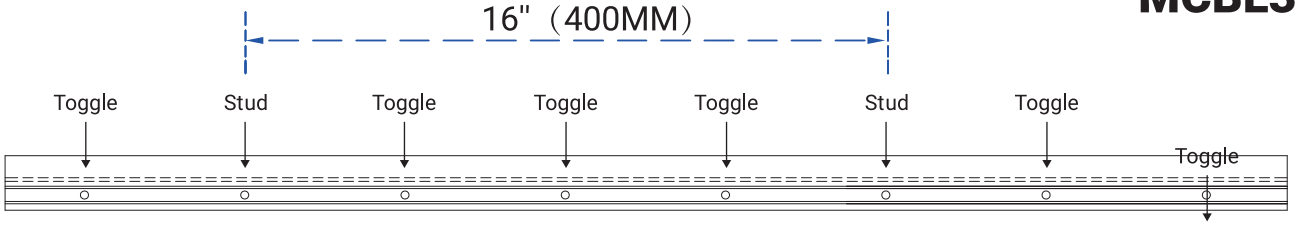

"Left Skewed Installation"

MCBL4030

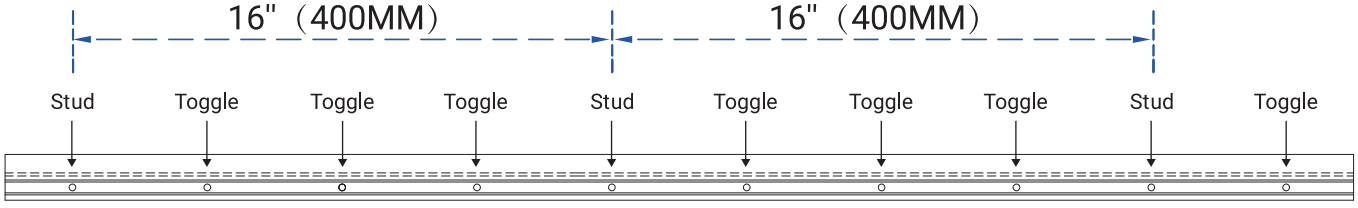

"Left Skewed Installation"

MCBL4830/MCBL5430

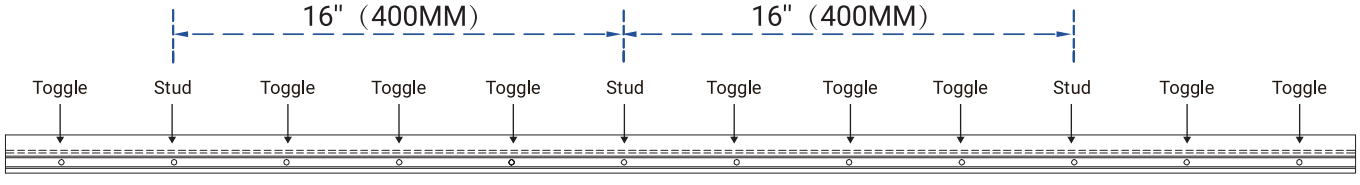

"Left Skewed Installation"

MCBL6030/MCBL7230

METHOD 1: FOR HANGING WALLS

Method 1.1 : For Solid or Concrete Walls.

1 ⚠ **ATTENTION**

- The distance between the bottom of bracket to the top of the mirror is $2^{1/8"}$ inch(55mm).
- The recommended installation safety distance is 3 inch(at least) from the faucet.

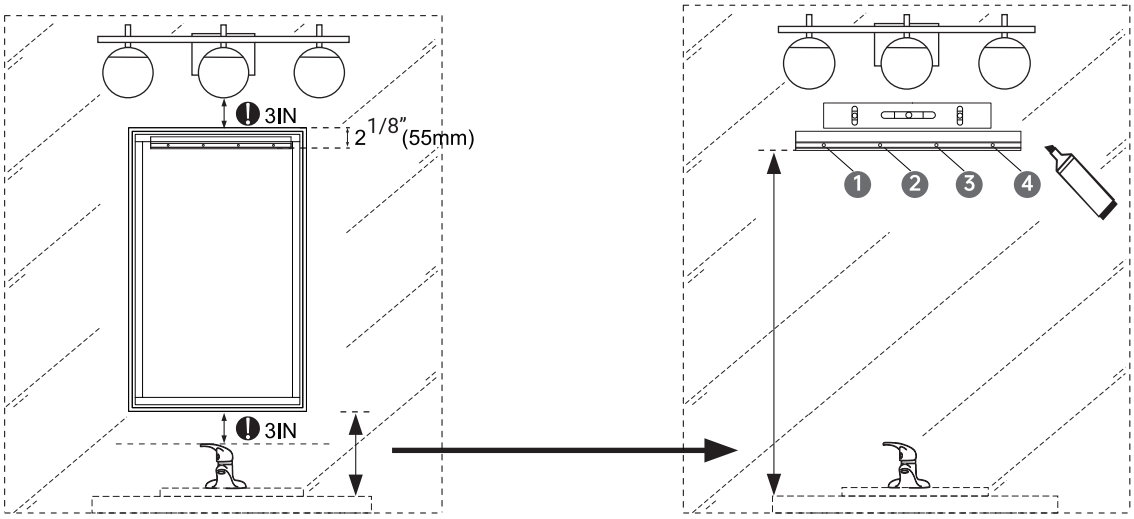

2

Use a 1/4" (6mm) drill to drill holes at the marked points to a depth of 13/4" (45mm), then apply the wall anchors with a hammer. Mount the lower bracket to the wall with screws.

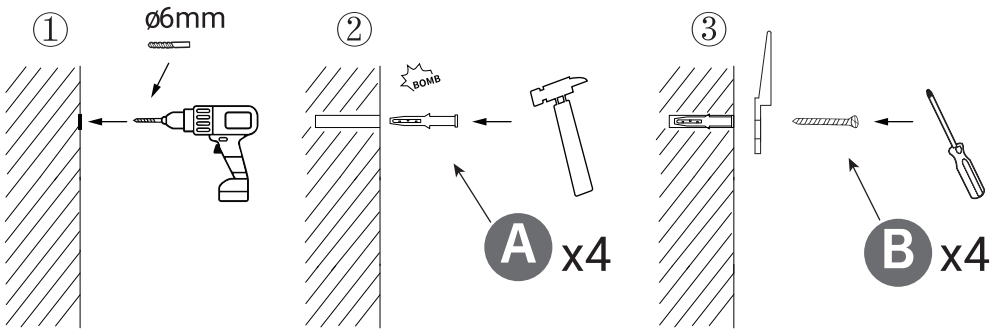

⚠ Note: Please wear goggles and pay attention on your safety.

A		4 PCS
B		4 PCS

3

Lift the medicine cabinet and place it securely in the upper bracket. Holding the cabinet in an upright position, secure the lower bracket in the grooves on the bottom of the cabinet.

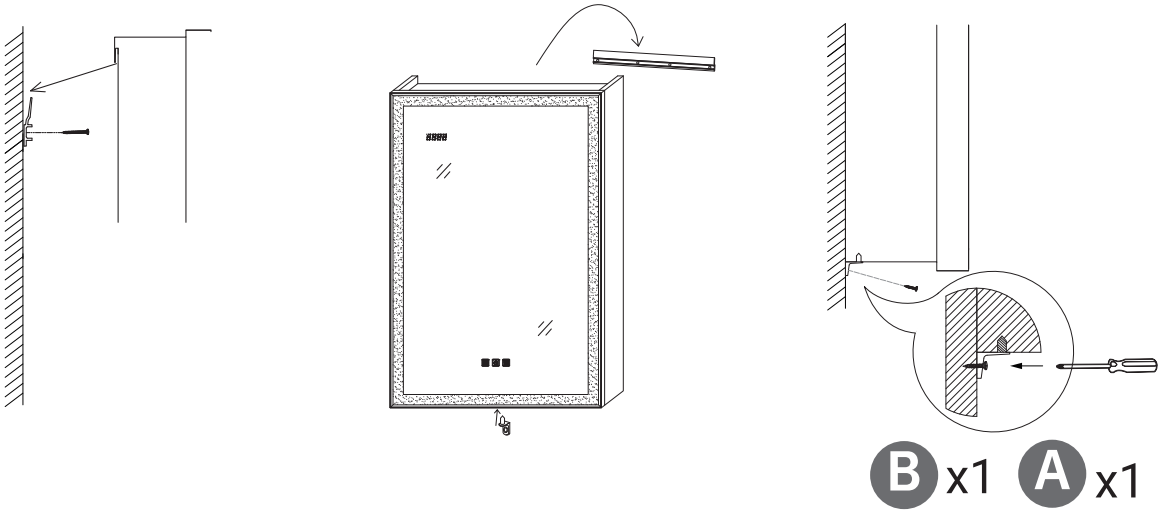

Note: Gently shake the mirror to ensure that the mirror is securely installed.

A 1 PCS

B 1 PCS

4

Install side Panels

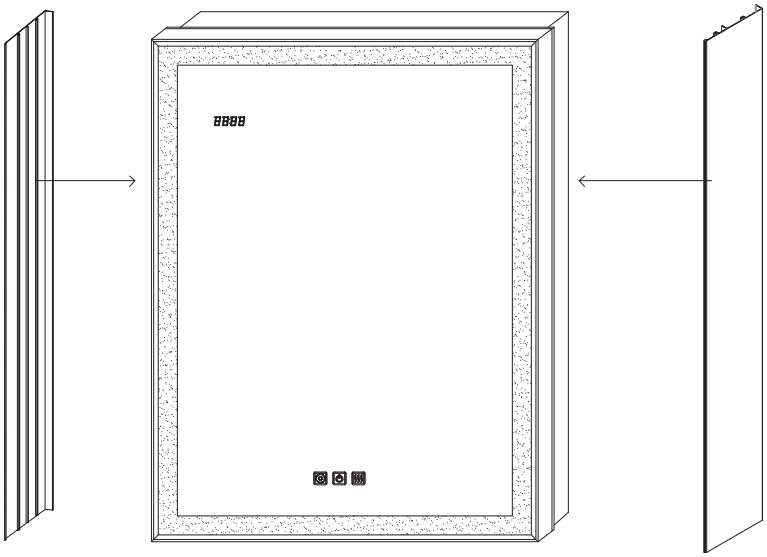

Note: No need to install side panels if recessed.

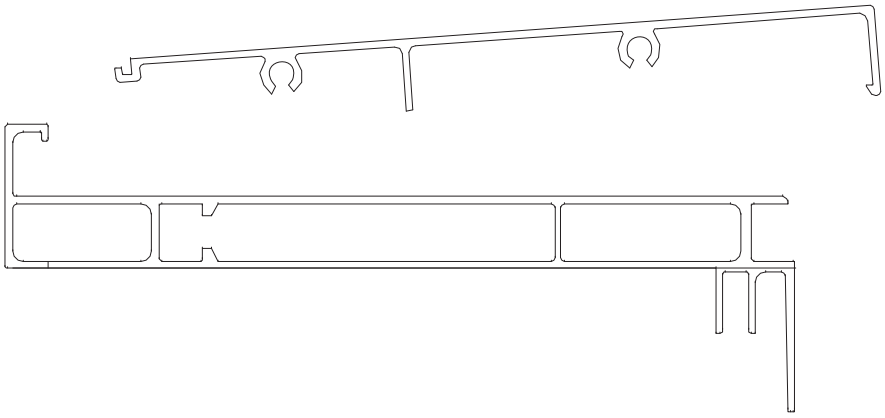

Align the slots inside of
the board and cabinet.

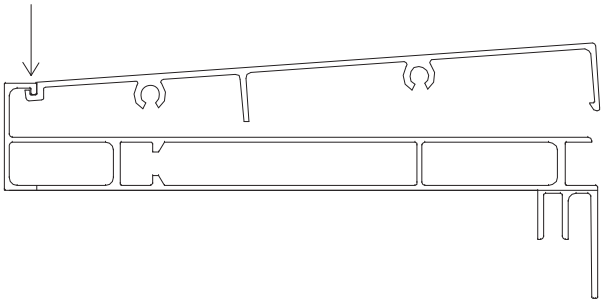

Press down the board until
they are clamped together.

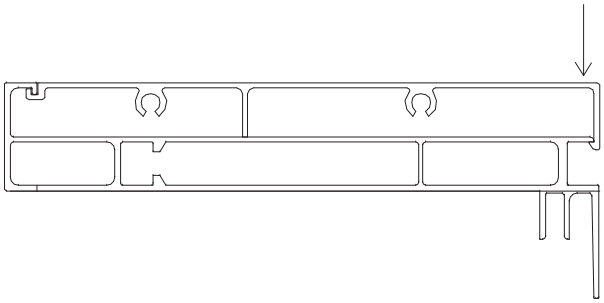

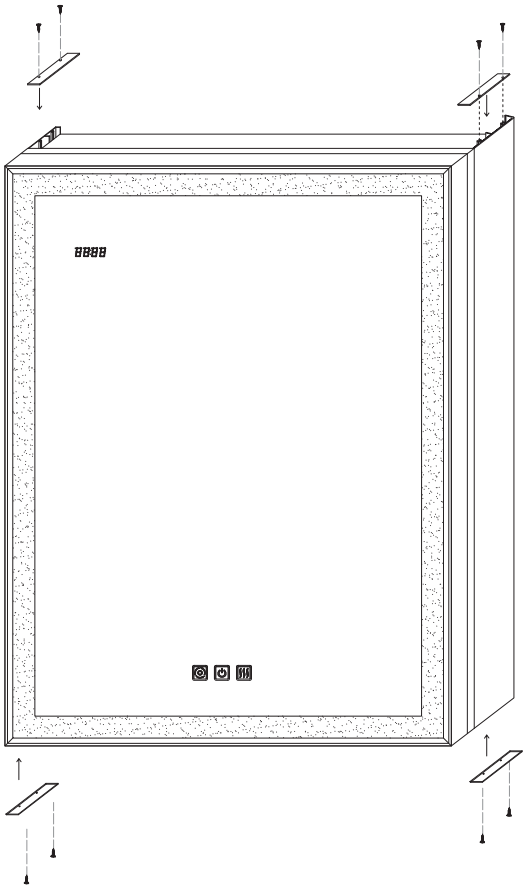

C 8 PCS

5

Plug the mirror. You can use the plug directly or connect the wire to a standard switch lighting circuit.

●Use the plug

After hanging the mirror, plug it directly.

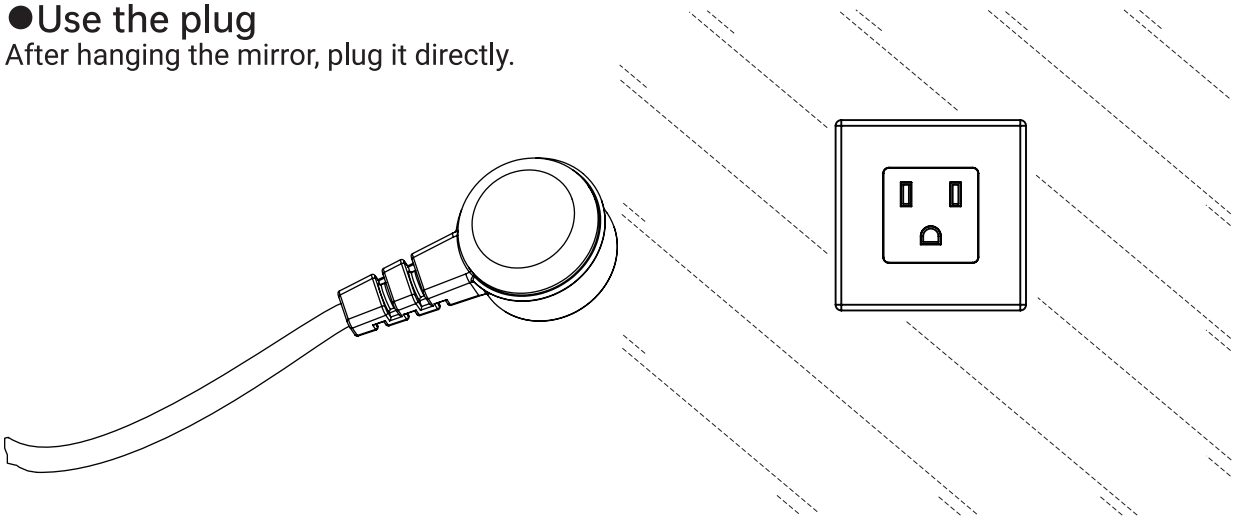

●Hardwire Installation

Cut the plug and connect the mirror's wire to the power by the wire connectors.

⚠ DANGER: Before installation, make sure the main power is cut off.

BLACK WIRE --- POWER SUPPLY L (LIVE)
WHITE WIRE --- POWER SUPPLY N (NEUTRAL)
GREEN WIRE --- POWER SUPPLY E (EARTH)

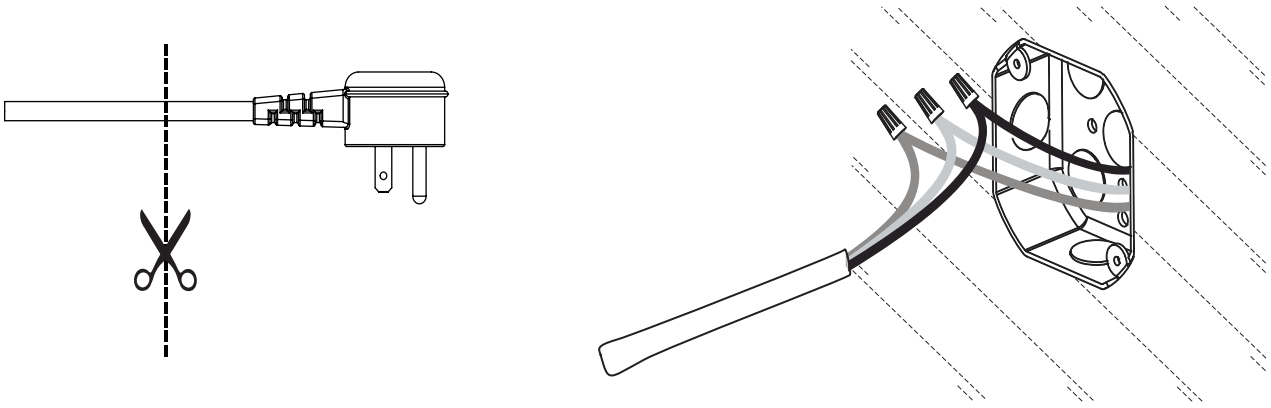

METHOD 2: FOR RECESSED

6

- The wall space is set aside in advance based on the size of the recessed led medicine cabinet

Single door

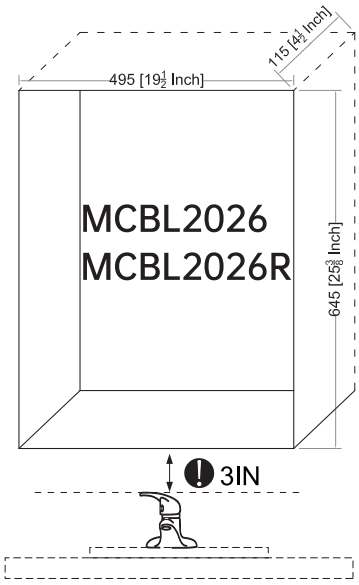

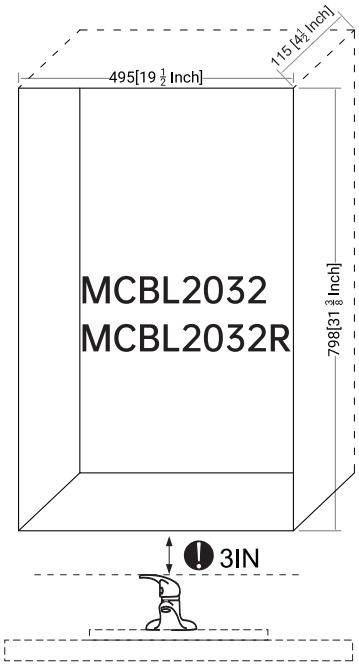

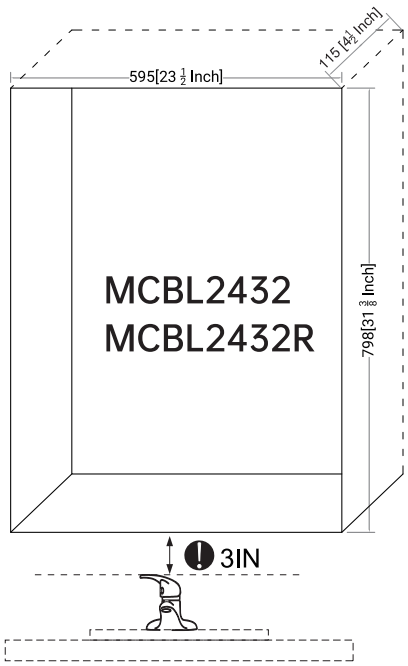

Double door

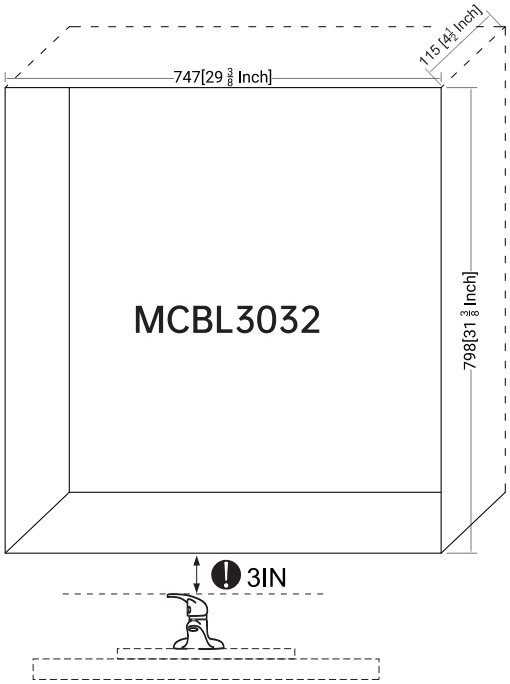
747[29 3/8 Inch]
115 [4 1/2 Inch]
MCBL3032
798[31 3/8 Inch]
3IN

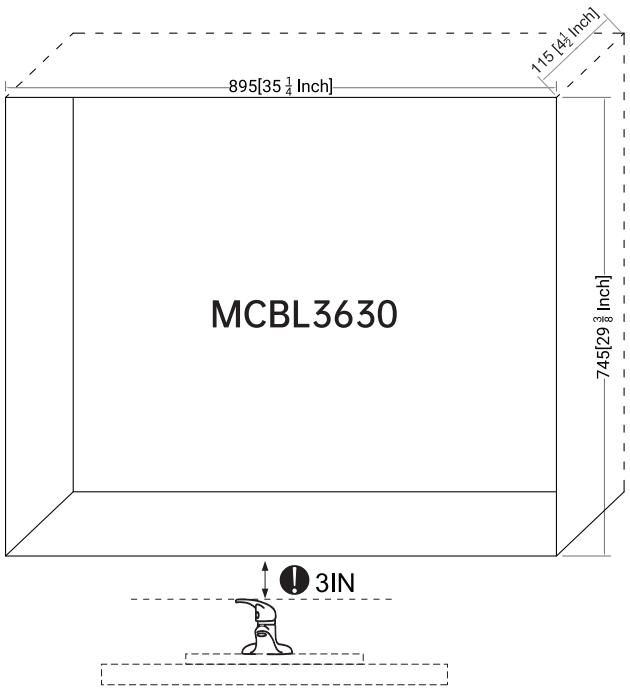
895[35 1/4 Inch]
115 [4 1/2 Inch]
MCBL3630
745[29 3/8 Inch]
3IN

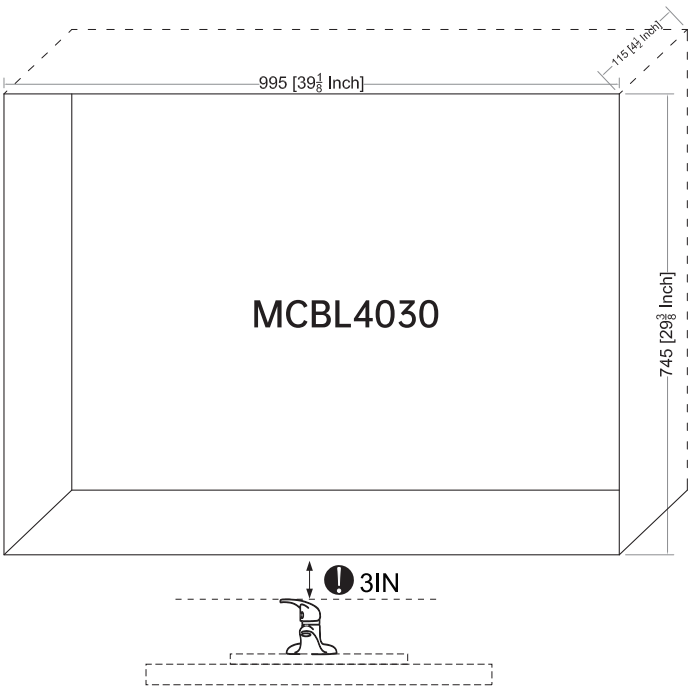
995 [39 1/8 Inch]
115 [4 1/2 Inch]
MCBL4030
745 [29 3/8 Inch]
3IN

Three door

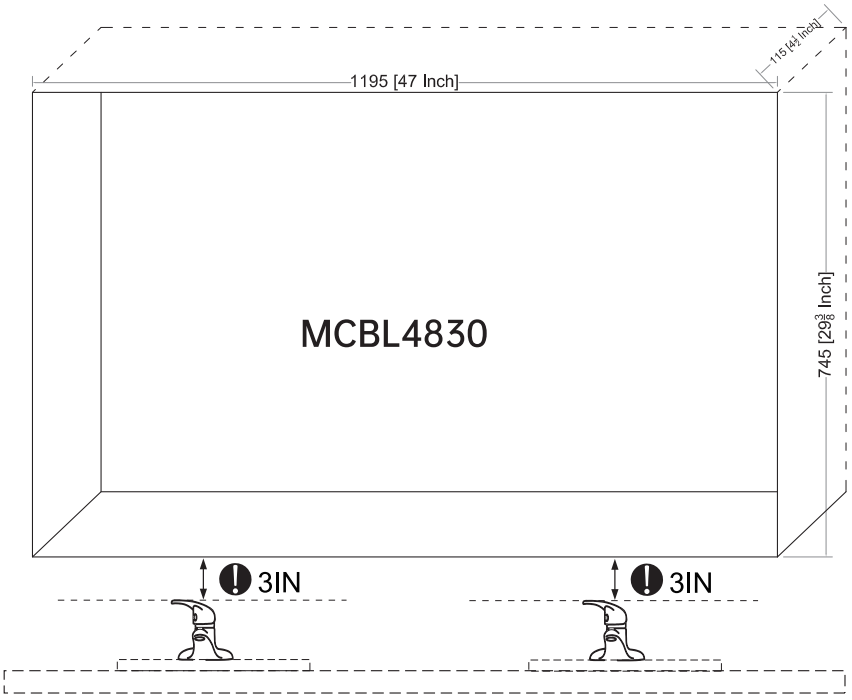
1195 [47 Inch]
115 [4½ Inch]
MCBL4830
745 [29⅜ Inch]
3IN
3IN

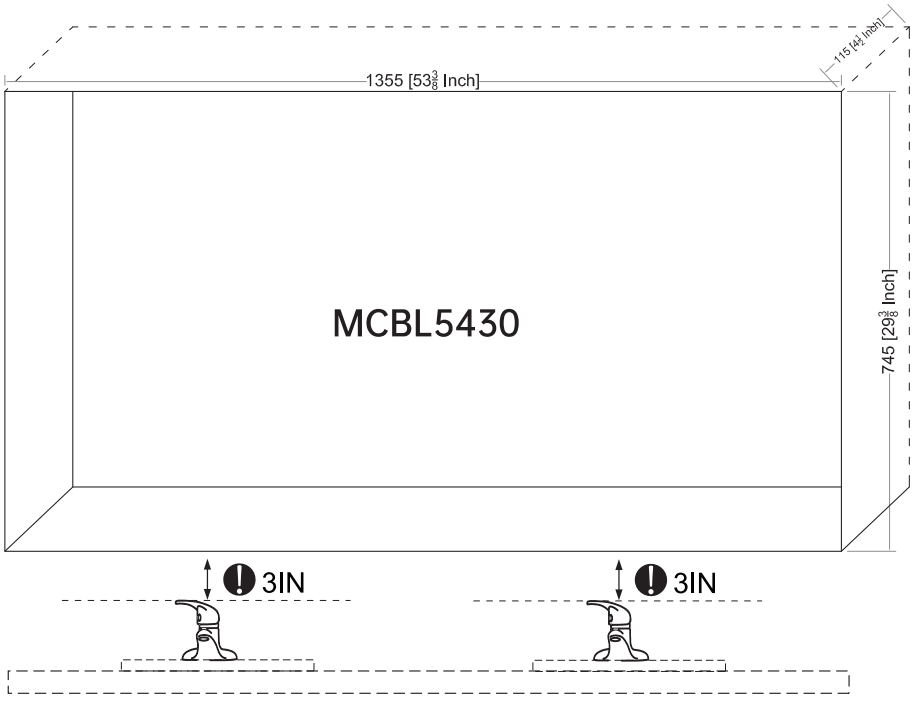
1355 [53⅜ Inch]
115 [4½ Inch]
MCBL5430
745 [29⅜ Inch]
3IN
3IN

Three door

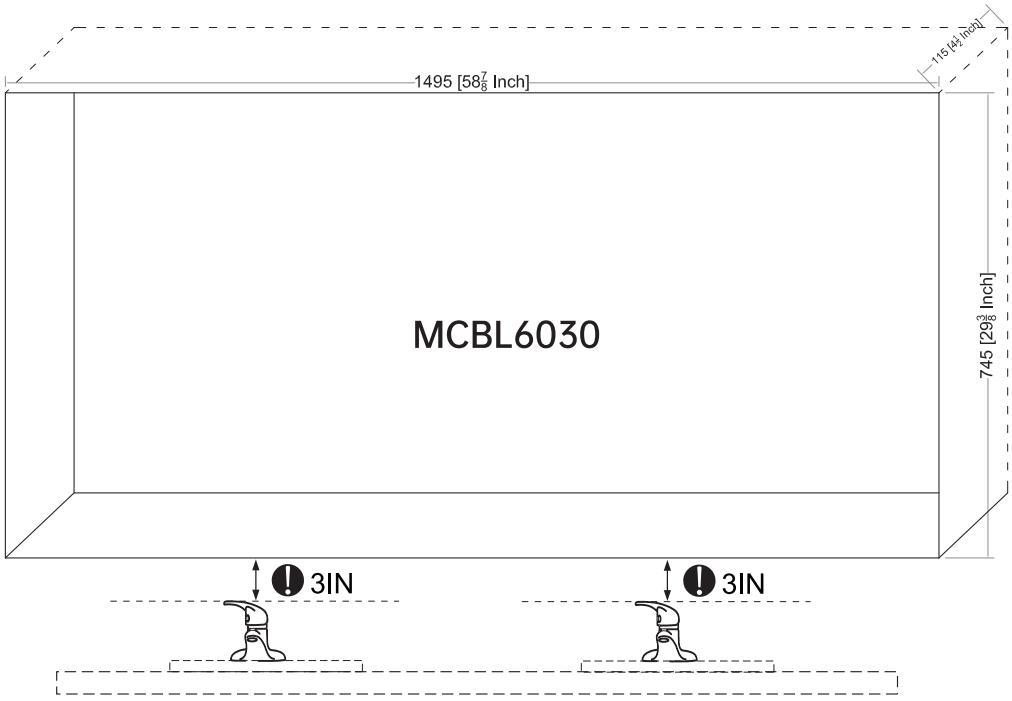
1495 [58 7/8 Inch]
115 [4 1/2 Inch]
745 [29 3/8 Inch]
MCBL6030
3IN
3IN

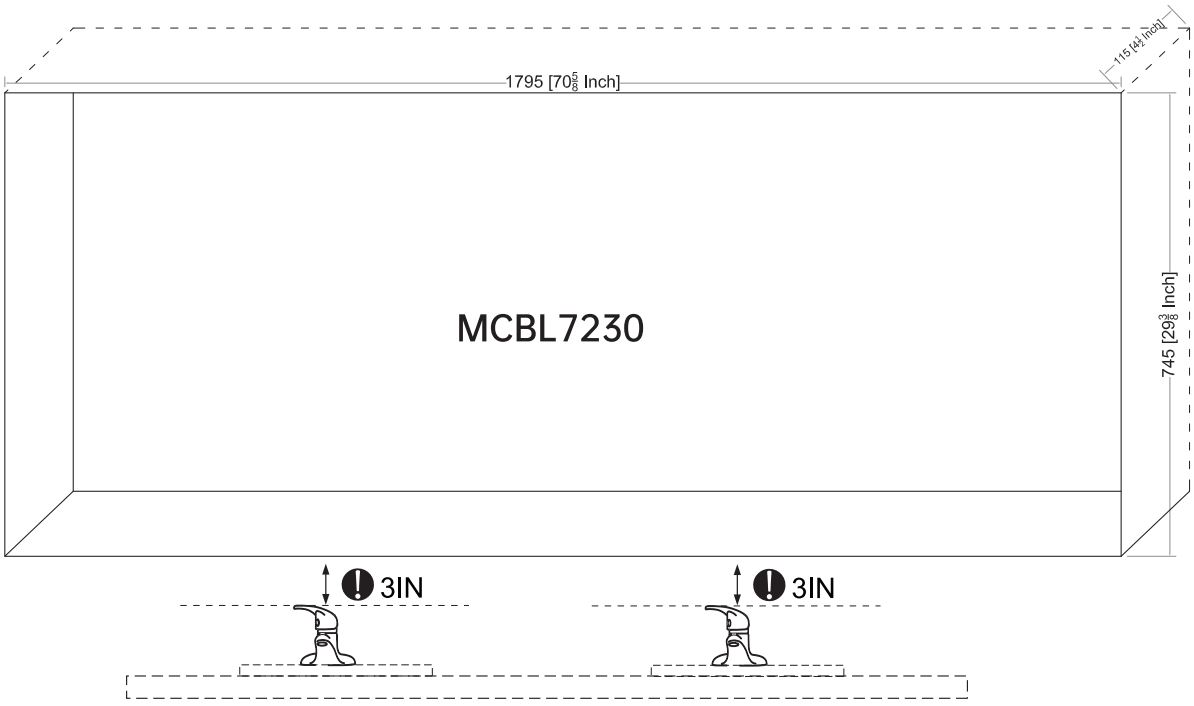
1795 [70 5/8 Inch]
115 [4 1/2 Inch]
745 [29 3/8 Inch]
MCBL7230
3IN
3IN

7

Plug the recessed led medicine cabinet.

●Hardwire Installation

Cut the plug and connect the mirror's wire to the power by the wire connectors.

⚠ DANGER: Before installation, make sure the main power is cut off.

BLACK WIRE --- POWER SUPPLY L (LIVE)
WHITE WIRE --- POWER SUPPLY N (NEUTRAL)
GREEN WIRE --- POWER SUPPLY E (EARTH)

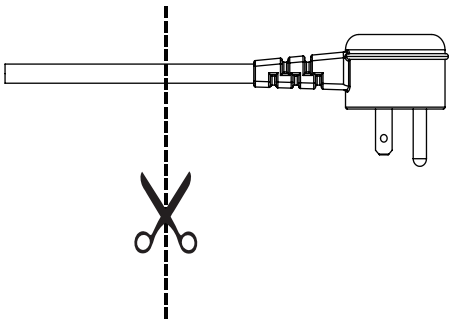

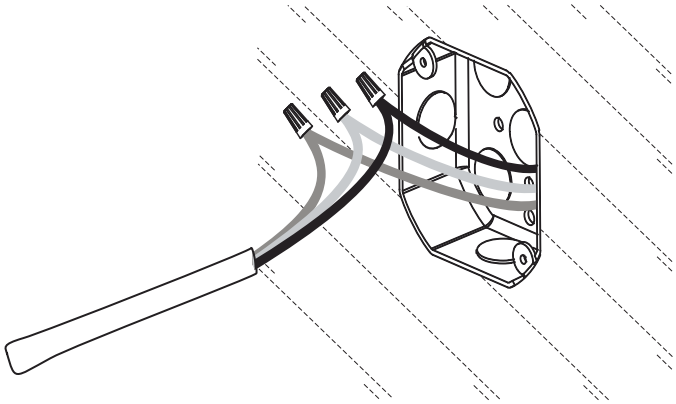

8

Install the recessed led medicine cabinet.

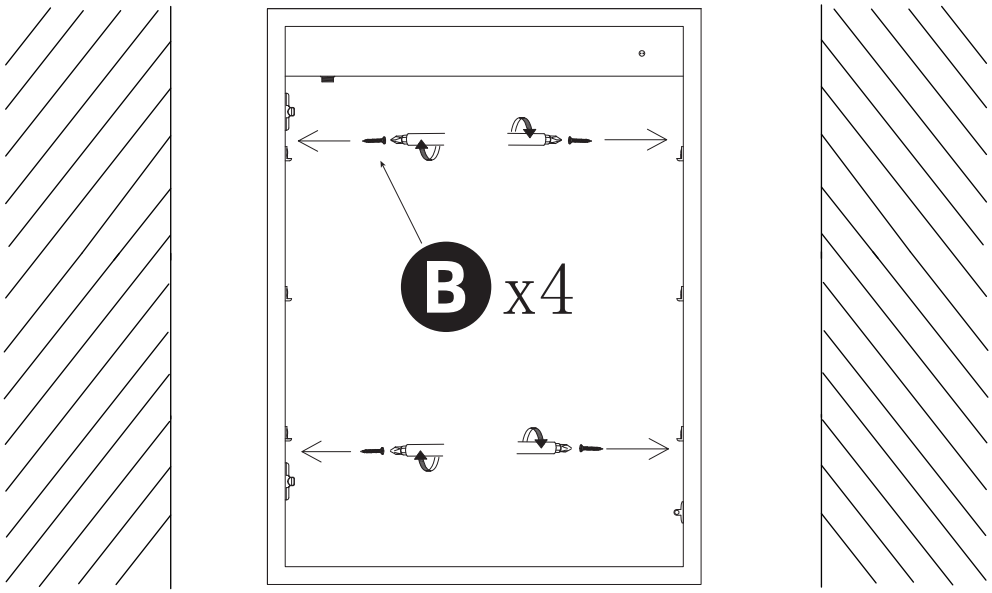

⚠ Note: Gently shake the mirror to ensure that the mirror is securely installed.

B 4 PCS

9

Insert the tempered glass shelves

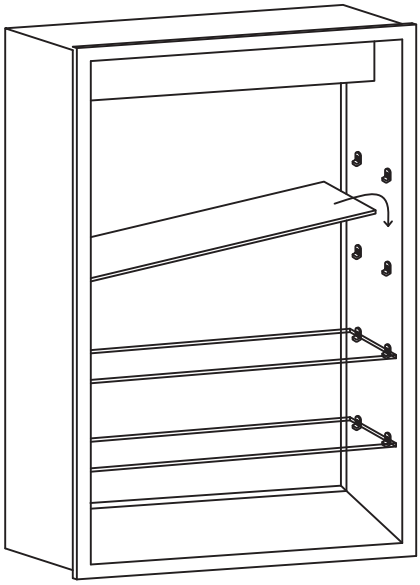

Note: The glass shelves varies according to the height of the product. MCBL2026/MCBL2026R has only two glass shelves.

10

The installation has completed!

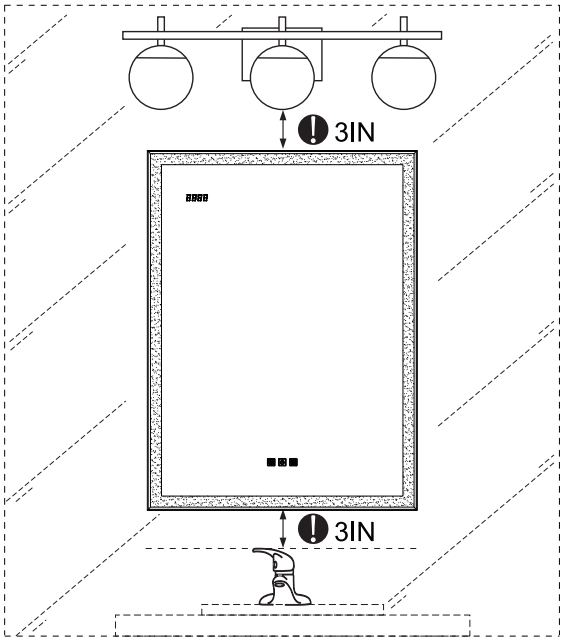

Congratulations!

PRODUCT SPECIFICATION

ITEM NO.:	Dimension	Watts	Lumens
MCBL2026	20 x 26 x 5 in	36W	2,400
MCBL2026R	20 x 26 x 5 in	36W	2,400
MCBL2032	20 x 32 x 5 in	36W	2,720
MCBL2032R	20 x 32 x 5 in	36W	2,720
MCBL2432	24 x 32 x 5 in	36W	2,950
MCBL2432	24 x 32 x 5 in	36W	2,950
MCBL3032	30 x 32 x 5 in	36W	3,280
MCBL3630	36 x 30 x 5 in	48W	3,510
MCBL4030	40 x 30 x 5 in	48W	3,800
MCBL4830	48 x 30 x 5 in	60W	5,000
MCBL5430	54 x 30 x 5 in	60W	5,400
MCBL6030	60 x 30 x 5 in	85W	5,800
MCBL7230	72 x 30 x 5 in	85W	6,800

PARAMETER	SPECIFICATION
Wiring Method	Hardwired / Plug In
Input Voltage	AC100-120V
Output Voltage	12V DC
Switch	Touch Sensor Switch
Color Temperature	6000K-3000K
CRI	≧90 Ra
Nema Rate	3
Anti-fog	Yes\Automatically Powers Off
Life Span	25000 hours
Working Temperature	14~113℉

CABINET DOOR INSTALLATION

*Taking MCBL3630 as an example.

1.Insert the hinges to the base ,then connect the doors with the cabinet.

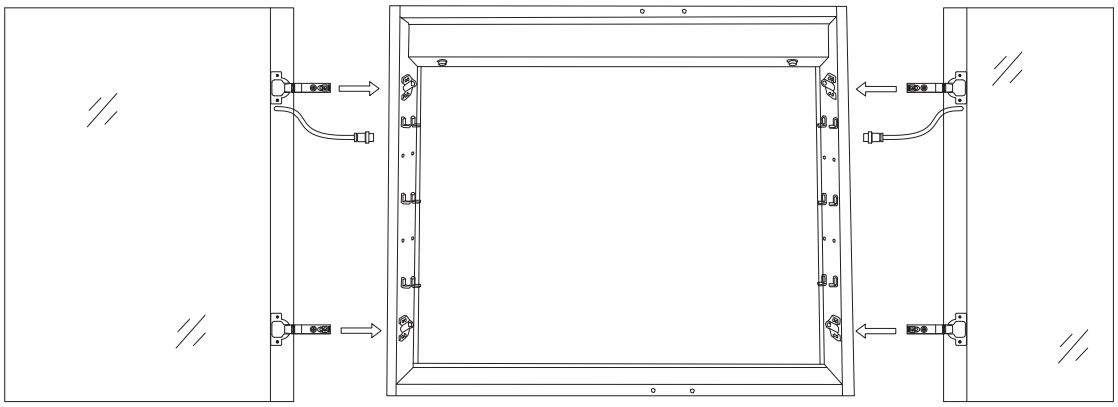

2.If necessary, adjust corresponding screws on the hinge to align the doors, ensure that gaps are even and the doors open and close smoothly.

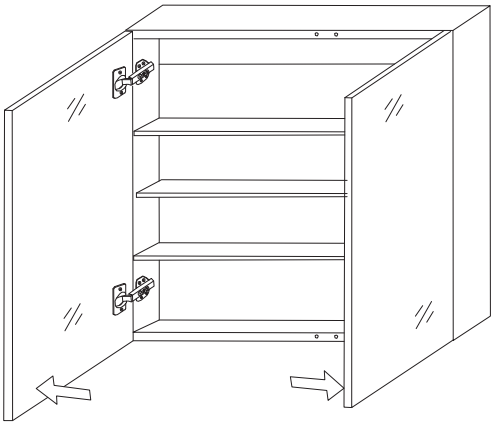

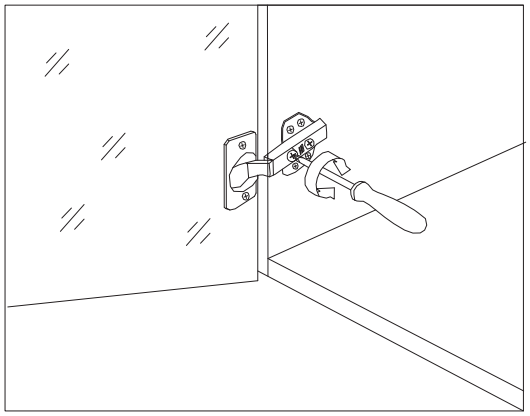

HYDRAULIC HINGE ADJUSTMENT METHOD

Open the "DTC" cover in the direction of the arrow.
①: Adjust the door counterclockwise to move to the right,
Turn clockwise to adjust the door to move to the left.
②: Twist counterclockwise to loosen it,You can adjust the front and rear direction of the door.
Tighten clockwise after adjustment.

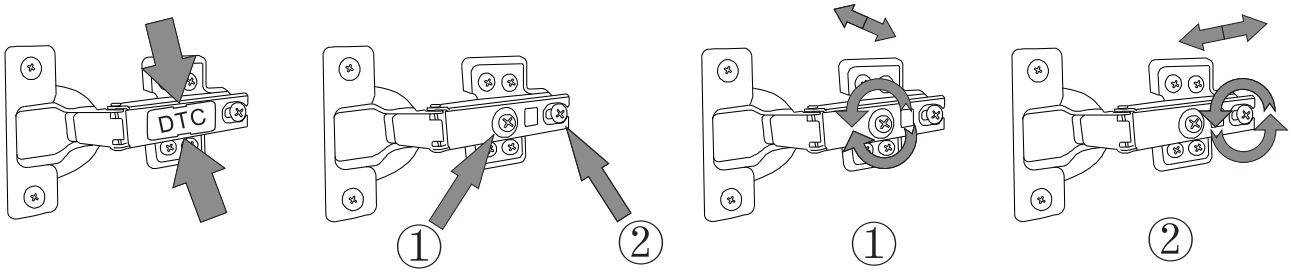

Note: Since this product has multiple DTC hinges in the cabinet, if you need to adjust the relative position of the cabinet door up and down, left and right, please adjust the hinges for better use of this product.

METHOD 1: FOR HANGING WALLS

Method 1.1 : For Solid or Concrete Walls.

（Please refer to step 1 to step 5、9、10, P8-P11, P17.）

METHOD 2: FOR RECESSED

（Please refer to step 6 to step 10, P12-P17.）

*Taking MCBL2032 as an example.

*The spacing between each two holes is 4 in (100mm).

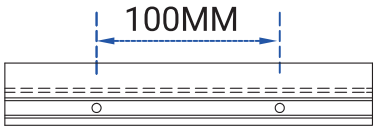

- If walls are stud or dry Wall, or use toggle anchor please consult a licensed contractor and your local hardware store for assistance.
- Using the electronic stud finder and mark stud locations using the pencil.
(Note: It is best to mount the bracket to at least (1) stud, using the illustrative graph shown below for reference. Wood studs are typically located every 16”, on center.)

PRODUCT SPECIFICATION

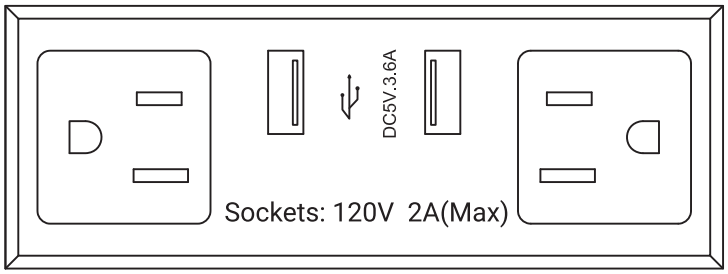

⚠ **Note:** Sockets: 120Vac, 2A(Max), 240W; Usb: 5Vdc, 3.6A(Max), 18W;
Not suitable for high power appliances.

⚠ Induction Led Strip.
The top light bar will automatically on and off as the door open and close.

BRAND SUPPORT

Thank you for your support and for choosing our brand.
We greatly appreciate your business.

If you have any problem, please feel free to contact us:

homefixassist@outlook.com