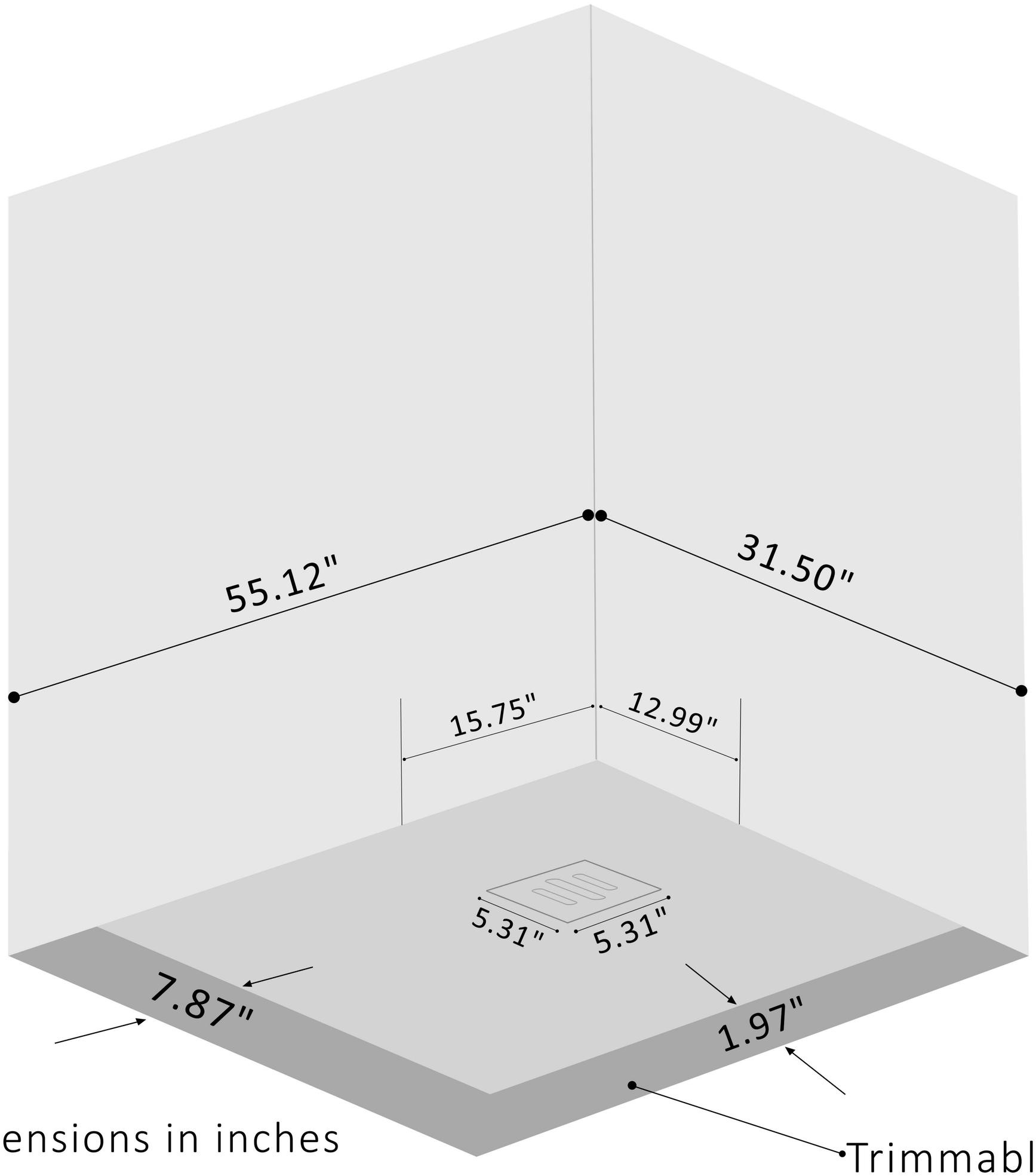
55.12"
31.50"
15.75"
12.99"
5.31"
5.31"
7.87"
1.97"
Dimensions in inches
Trimmable area

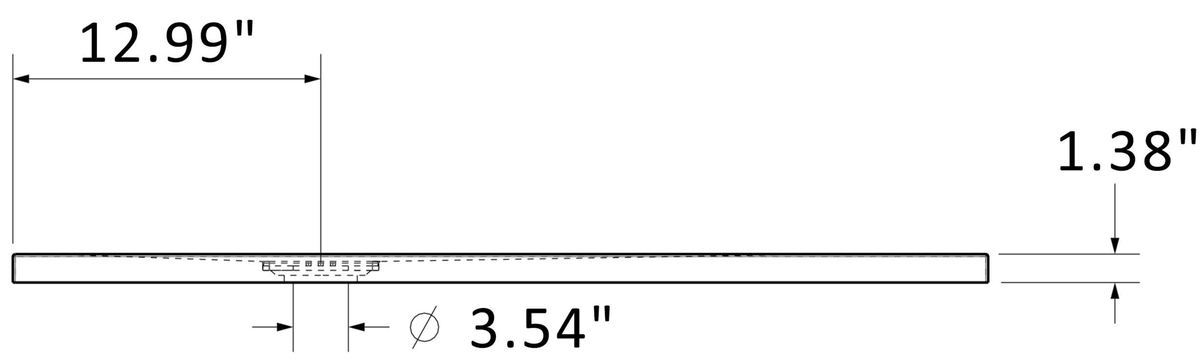
12.99"
1.38"
∅ 3.54"