Fittes

Dimension Database

Flush Wall Vent (Luxe+)

Component Dimensions

If unsure of vent sizing, please refer to our **Sizing Tool:** https://fittes.com/#quiz-xYSKeJ

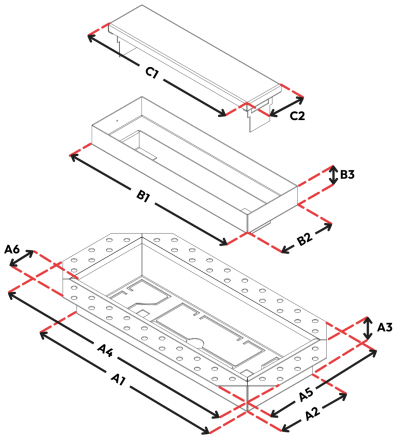

Assembled View:

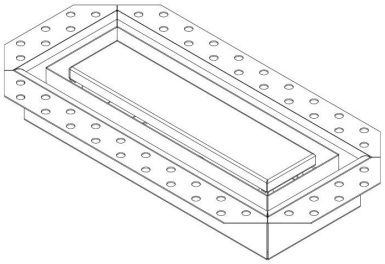

Imperial (in)

	4x10	4x12"	6x10"	6x12"	6x14"	8x8"
A1	9 3/4	11 3/4	9 3/4	11 13/16	13 3/4	7 7/8
A2	3 3/4	3 3/4	5 3/4	5 13/16	5 3/4	7 7/8
A3	1 3/4	1 3/4	1 3/4	1 3/4	1 3/4	1 11/16
A4	12 1/4	14 3/16	12 1/4	14 3/16	16 1/4	10 3/8
A5	6 1/4	6 3/16	8 1/4	8 3/16	8 1/4	10 3/8
A6	#N/A	1 1/4	1 5/16	1 1/4	1 5/16	1 5/16
B1	8 7/8	10 13/16	8 13/16	10 3/4	12 13/16	6 9/16
B2	2 7/8	2 13/16	4 13/16	4 13/16	4 13/16	6 9/16
B3	15/16	15/16	1 7/8	1 3/16	1 3/16	1 1/16
C1	7 15/16	9 7/8	7 7/8	9 13/16	11 7/8	5 1/4
C2	1 15/16	1 7/8	3 7/8	3 7/8	3 7/8	5 1/4

	8x12"	8x14.25"	10x10"	10x14.25"	10x30.25"	12x12"
A1	11 3/4	13 3/4	9 3/4	14 3/16	30 1/4	11 3/4
A2	7 3/4	7 3/4	9 3/4	10	10	11 3/4
A3	1 3/4	1 3/4	1 11/16	1 3/4	1 3/4	1 11/16
A4	14 1/4	16 1/4	12 3/16	16 11/16	32 3/4	14 1/4
A5	10 1/4	10 1/4	12 3/16	12 1/2	12 1/2	14 1/4
A6	1 1/4	1 5/16	1 1/4	1 5/16	1 5/16	1 5/16
B1	9 15/16	11 15/16	7 15/16	12 1/2	28 9/16	9 15/16
B2	5 15/16	5 15/16	7 15/16	8 5/16	8 5/16	9 15/16
B3	1 7/8	1 1/4	13/16	13/16	1 1/16	7/8
C1	8 1/8	10 1/8	6 1/8	10 13/16	26 7/8	8 1/8
C2	4 1/8	4 1/8	6 1/8	6 5/8	6 5/8	8 1/8

Metric (mm)

	4x10"	4x12"	6x10"	6x12"	6x14"	8x8"
A1	247.7	298.5	247.7	300.0	349.3	200.0
A2	95.3	95.3	146.1	147.6	146.1	200.0
A3	44.5	44.5	44.5	44.5	44.5	42.9
A4	311.2	360.4	311.2	360.4	412.8	263.5
A5	158.8	157.2	209.6	208.0	209.6	263.5
A6	#N/A	31.8	33.3	31.8	33.3	33.3
B1	225.4	274.6	223.8	273.1	325.4	166.7
B2	73.0	71.4	122.2	122.2	122.2	166.7
B3	23.8	23.8	47.6	30.2	30.2	27.0
C1	201.6	250.8	200.0	249.2	301.6	133.4
C2	49.2	47.6	98.4	98.4	98.4	133.4

	8x12"	8x14.25"	10x10"	10x14.25"	10x30.25"	12x12"
A1	298.5	349.3	247.7	360.4	768.4	298.5
A2	196.9	196.9	247.7	254.0	254.0	298.5
A3	44.5	44.5	42.9	44.5	44.5	42.9
A4	362.0	412.8	309.6	423.9	831.9	362.0
A5	260.4	260.4	309.6	317.5	317.5	362.0
A6	31.8	33.3	31.8	33.3	33.3	33.3
B1	252.4	303.2	201.6	317.5	725.5	252.4
B2	150.8	150.8	201.6	211.1	211.1	252.4
B3	47.6	31.8	20.6	20.6	27.0	22.2
C1	206.4	257.2	155.6	274.6	682.6	206.4
C2	104.8	104.8	155.6	168.3	168.3	206.4

* A3 measures the depth of the vent into the wall.

Additional Notes

Components

Body (A): Mudded into drywall. Provides flush finish with wall. Please see installation guide for proper install method

Outer Tray (B): Can slide to remove to access dampers. Double channel design for increased airflow.

Inner Tray (C): Can be painted or wallpapered to match wall. Comes pre-assembled to outer tray

Airflow Control

Dampers included in body.

Install Note

This product must be mudded into drywall

Compatible Materials

Inner tray can be painted over or wallpapered to match wall

Patent information: http://www.fittes.com/pages/patents