DN09X02R

SLIMLINE

2" ROUND SHOWER DRAIN

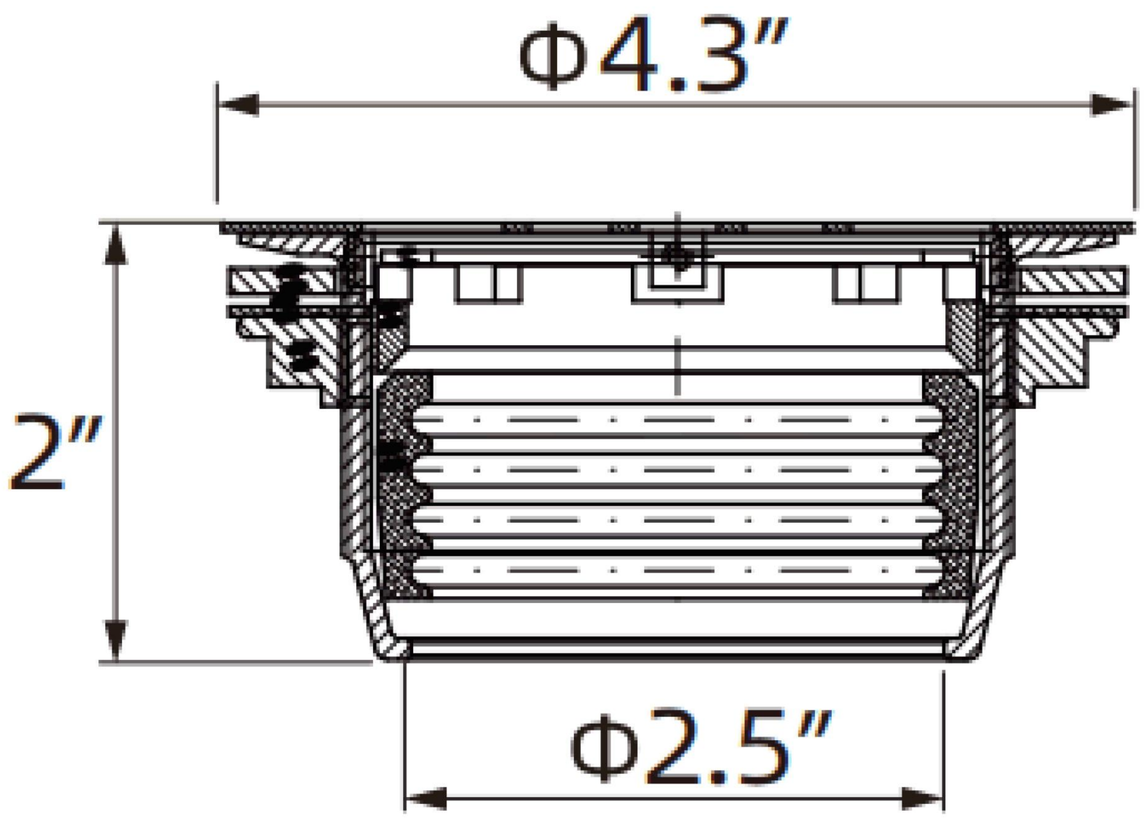

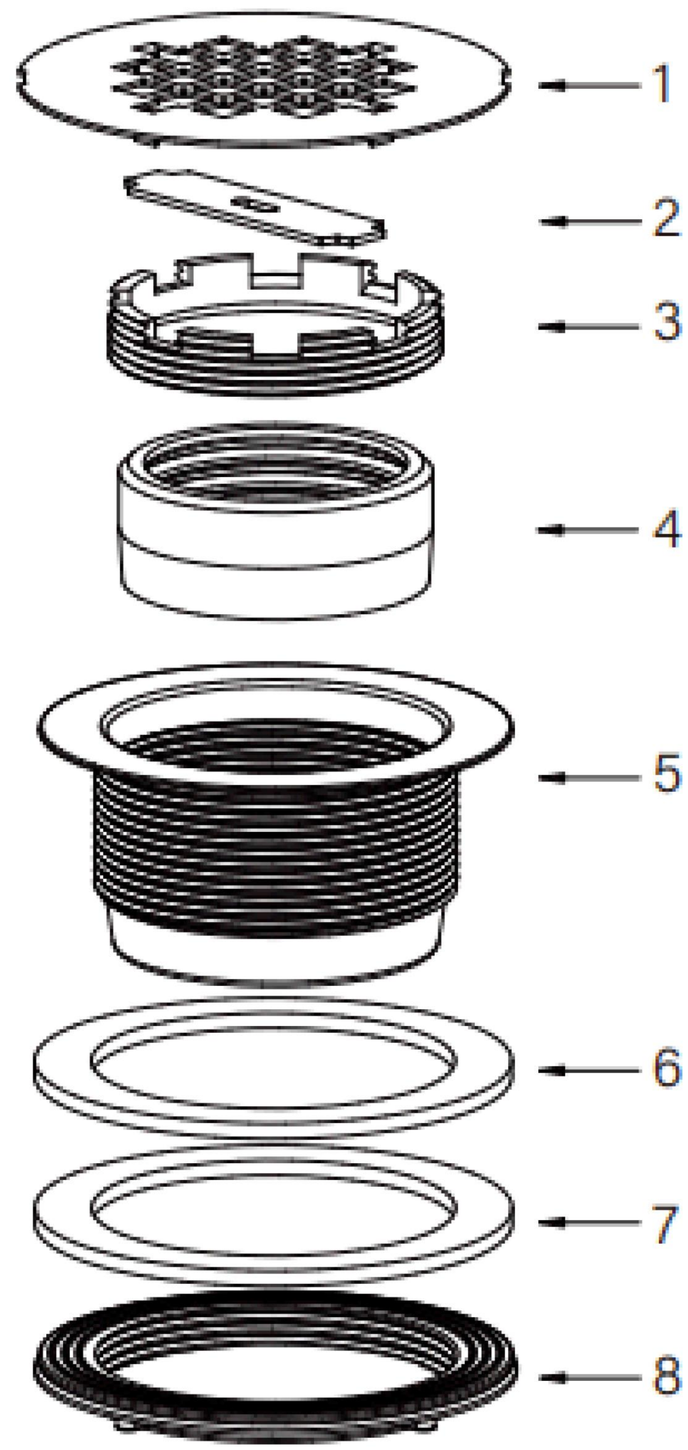

DreamLine reserves the right to update or modify the hardware or materials pictured without prior notice for the purpose of product improvement and customer satisfaction.

© DreamLine. All rights reserved.