DeerValley®

DV-1S0360	Vertex	Smart Toilet
PRODUCT MODEL	SERIES NAME	PRODUCT CATEGORY



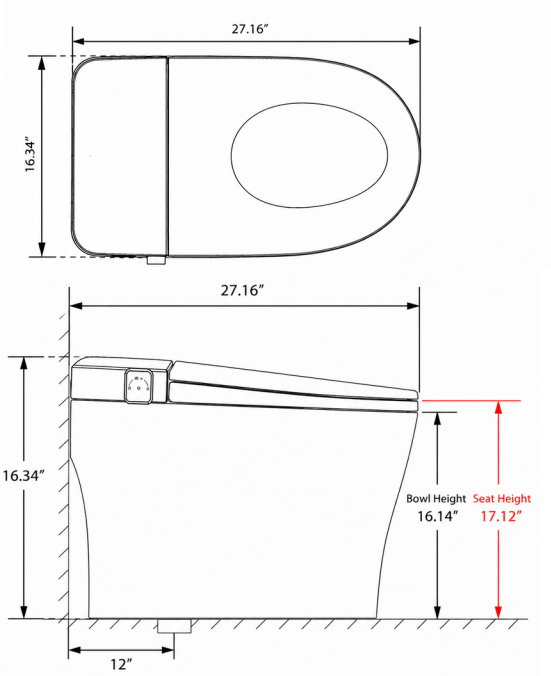

ACCESSORIES LIST

- Water Filter
- Sealing Ring
- Remote Control
- Remote Control Mounting Screws
- Mounting Kit
- Washer
- Nut
- Inlet Valve
- Battery Pack
- Foam Bottle & Funnel
- Air Freshener
- Instruction Manual

FEATURES

- Hands-Free & Remote Flushing
- Customized Comfort Cleansing
- Heated Seat & Warm Air Drying
- Built-In Water Pump & Integrated Filter
- Smart Dual Flush
- Foam Shield Technology
- All-Season Comfort
- Customizable Ambient Light
- Clear Electronic Display
- Complete Hygiene Protection
- Advanced Freshness Solution
- Gentle Mode
- 17.12" ADA-Compliant Seat Height

SPECIFICATIONS

- Material: Ceramic
- Toilet Seat Material: PP
- Overall Dimensions: 27.16" L × 16.34" W × 18.11" H
- ADA Seat Height: 17.12"
- Bowl Height: 16.14"
- Bowl Shape: O-Shape
- Trapway Design: S-Trap
- Flush Type: Siphon Flush
- Water Consumption: 0.92 GPF / 1.32 GPF
- Water Supply Hose Included: Yes
- Soft-Close Seat: Yes
- Multiple Safety Protections: Yes
- Battery Included: No
- Control Method: Remote Control + Side Knob
- Waterproof Rating: IPX4
- Power Cord Length: 4.92 ft (1.5 m)
- Plug Type: US Standard Plug
- Certifications: CEC / DOE
- Net Weight: 92.59 lbs

INSTALLATION

- Floor Mount
- Standard 12" Rough-In

COLOR

White

service@deervalleybath.com
(312) 626-9466

2-Year Limited Warranty