Widespread Lavatory Faucet With Brass Pop-Up

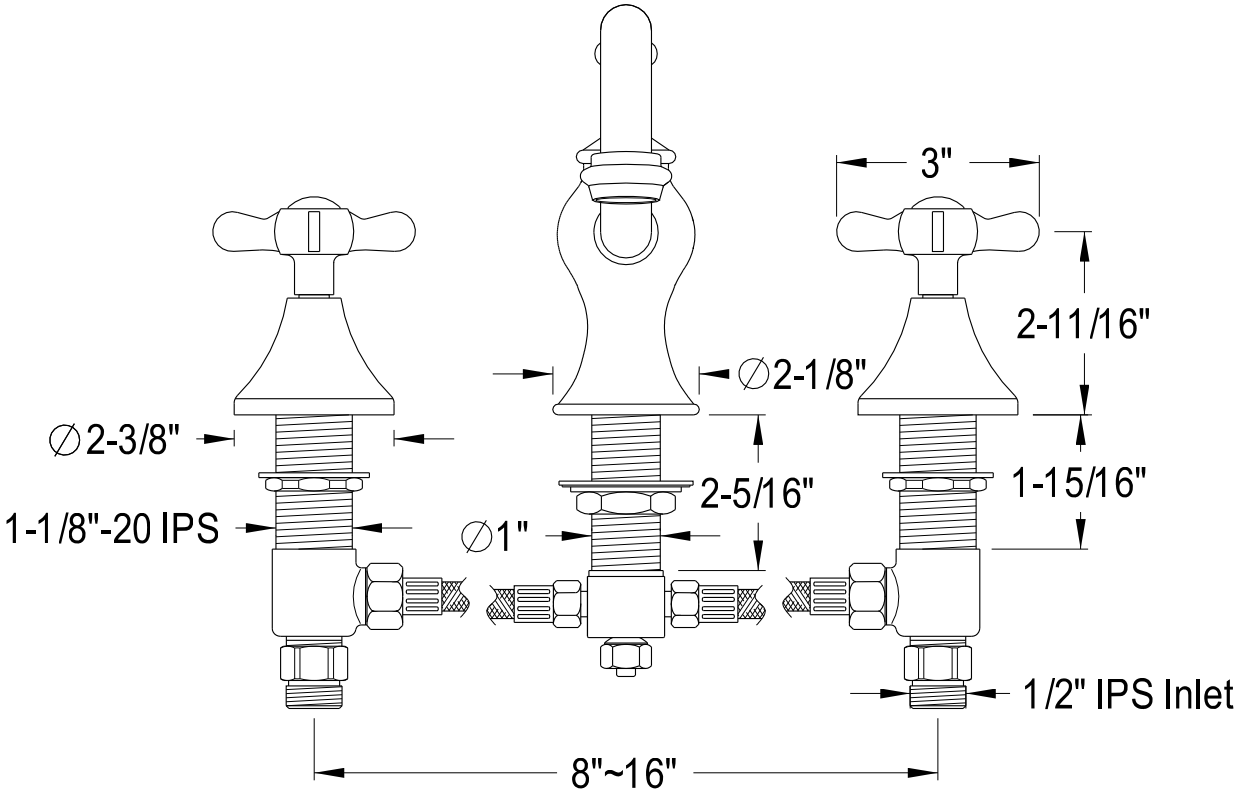

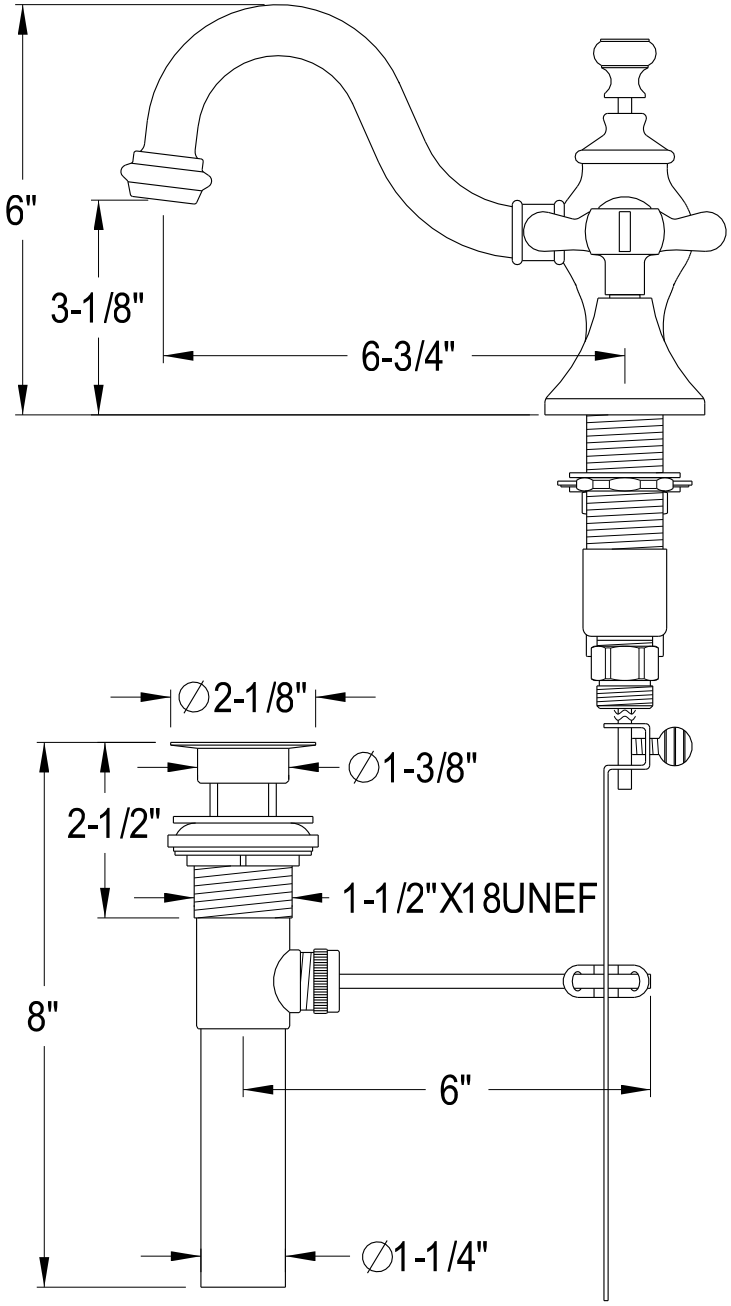

2016-11-A