**Ecostat S**
**Pressure Balance Trim**
Finishes : **brushed black chrome** Part no. : **15739341**

## Description

**Features**

- Temperature and on/off control for 1 outlet
- Flow: 5.44 GPM (20.6 L/Min)
- Integrated bypass for use with diverter tub spouts

## Item details

| | |
|---|---|
| List Price | $ 334.00 |

## Compliance

ADA

UPC C ®

## Product image
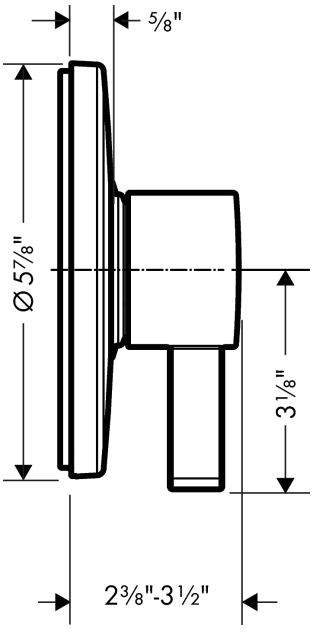
## Scale drawing