ASSEMBLING & INSTALLATION INSTRUCTIONS

The drawing shown may not exactly match the product enclosed. However, the installation instructions do apply to this product.

4272 4273 4274 4275 5624 5625 5626 5627

- **WARNING! SHUT POWER OFF AT FUSE OR CIRCUIT BREAKER.**
- **ATTENTION! COUPER LE COURANT AU FUSIBLE OU UN DISJONCTEUR.**

ASSEMBLING THE FIXTURE (Fig.1)

1. Shut off the power at the circuit breaker box. Remove old fixture and all hardware from Junction Box.
2. Carefully unpack your new fixture and lay out all the parts on a clear area. Take care not to lose any small parts necessary for installation.
3. Thread the two mounting screws about 1/4” into the pre-drilled holes in the mounting plate spaced the same distance apart as the holes in the canopy.
4. Attach the mounting plate to the Junction Box with the two Junction Box screws as shown. The side of the mounting plate marked "GND" must face out. **The junction box is not included.**
5. Install the light bulbs(Not included) in accordance with the fixture specifications. **NOTE: DO NOT EXCEED THE SPECIFIED WATTAGE!**
6. Raise the pipe thread of finial(E) insert to the side hole of the glass(D) and lock it securely with the plastic shim and loop(F).
7. Raise the lamp holder(A) into the glass assembly, use the pipe’s(C) grapnel hooked the lamp holder’s loop and glass’s loop.
8. While holding the fixture body assembly towards the ceiling, connect the electrical wires as Shown in **Fig.2**, making sure that all wire nuts are secured. You may have to wrap the connections with electrical tape. If your outlet has a ground wire (green or bare copper), connect the fixture ground wire to it. Otherwise connect fixture’s ground wire directly to the mounting plate with the green screw provided. After wires are connected, tuck them carefully inside the Junction Box.
9. Raise the fixture body’s canopy onto the Junction box, aligning screws on mounting plate with mounting holes in canopy and lock it securely with the ball nuts(B).

Your installation is now complete. Return power to the junction box and test the fixture.

FIG.1

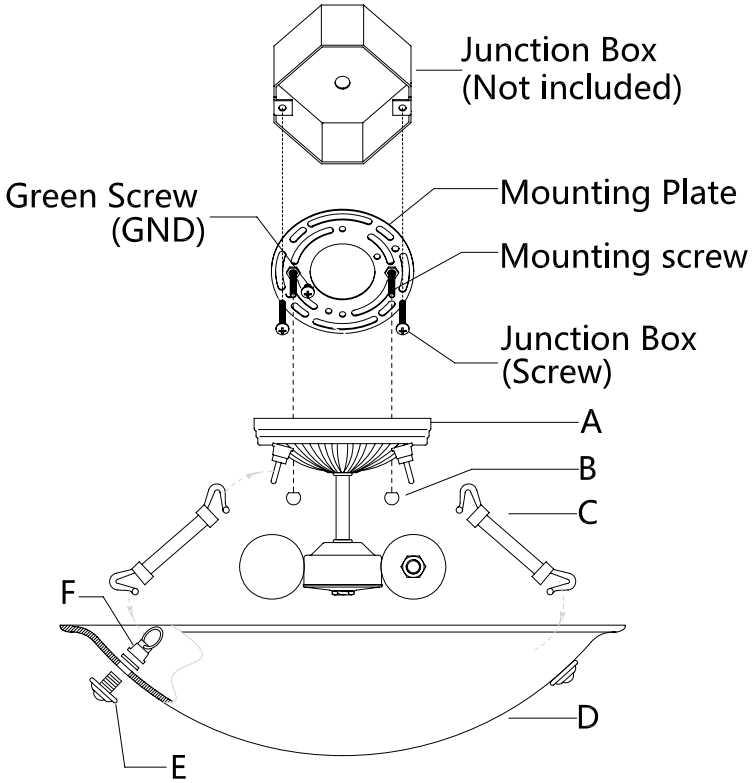

FIG.2

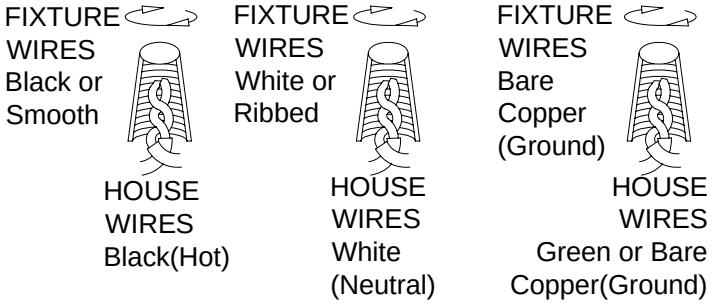

Thank you for purchasing a **LIVEX** product.
Need assistance with parts or assembly? Please call customer service at: **800-761-8056**
Or visit us on-line at: WWW.LIVEXLIGHTING.COM

©COPYRIGHT ALL RIGHTS RESERVED.**LIVEX** LIGHTING,INC.

DOC20170404272