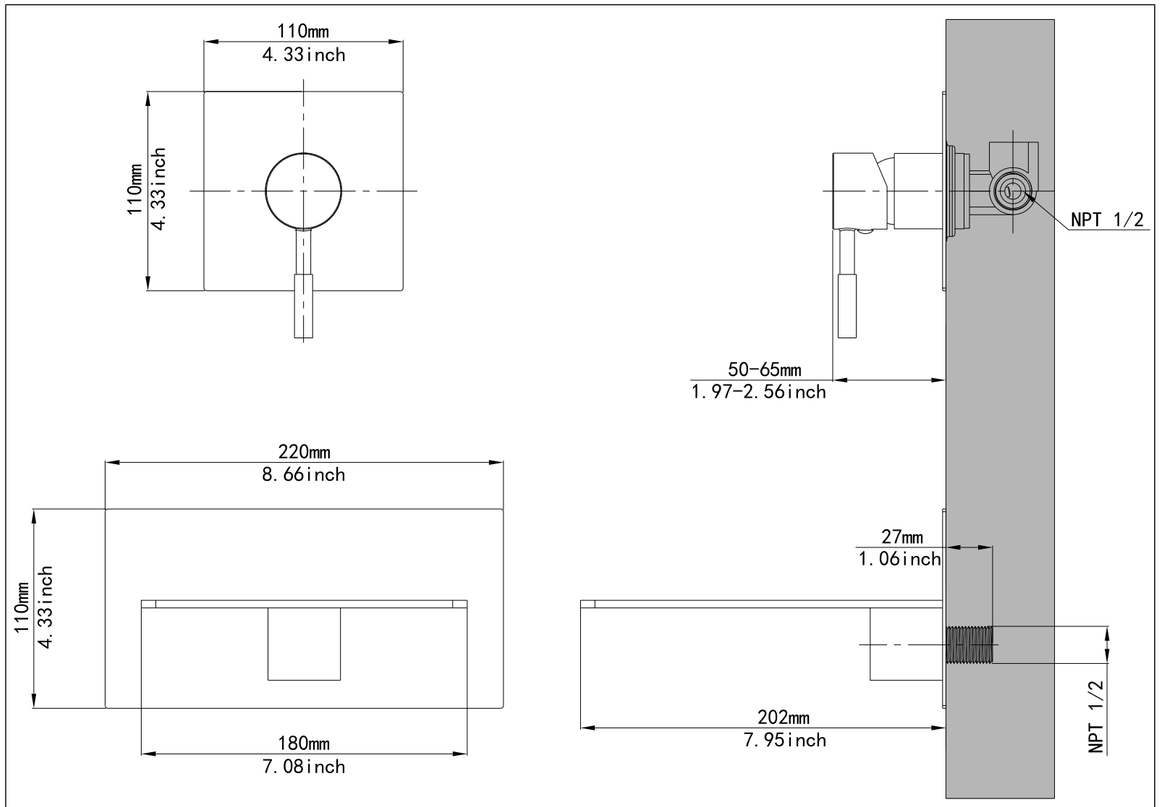

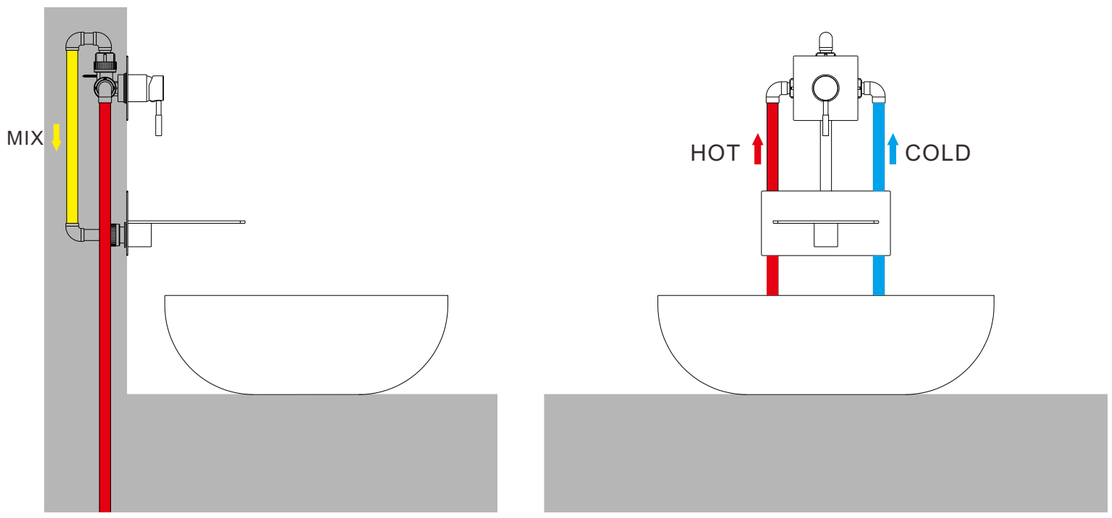

1.Connect the cover plate and spout with screws.

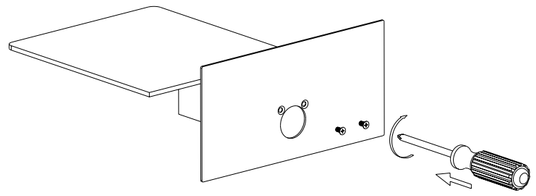

2.Drill holes in the wall.

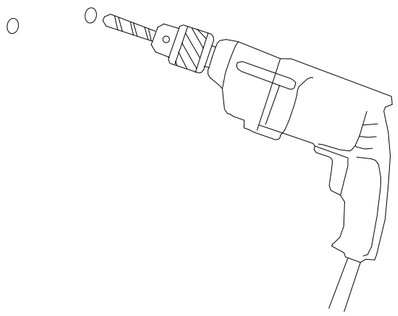

3.Knock the expansion nut into the hole with the hammer.

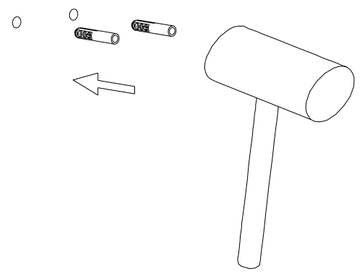

4.Lock the control body to wall with screws.

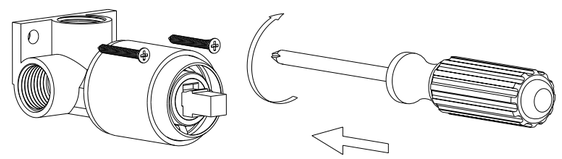

5.Connect the faceplate to main body.

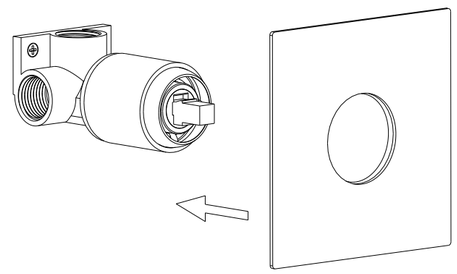

6. Install the handle.

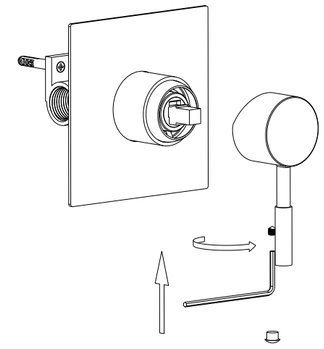

7.Wrap the water outlet joint with raw material belt,tighten with a wrench.

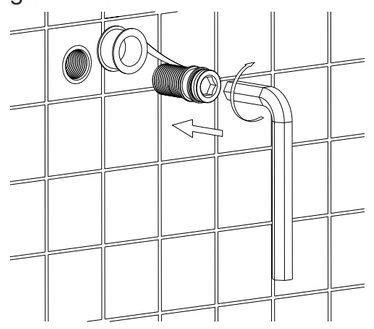

8. Fixed the spout body finished in step 1 to wall.

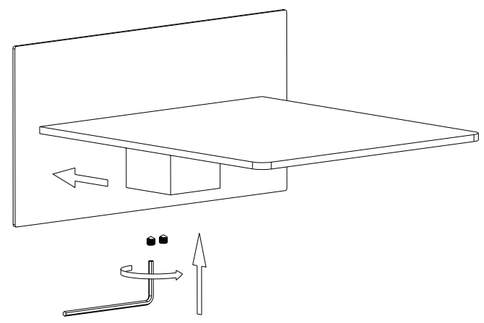

尺寸:297*210mm(A4)正反面印刷