VEVOR

Upgrade · The Home Creator Way

BOTTLE WATER DISPENSER PUMP SYSTEM

Model:BW1000A、BW2000A、BW1020A

VEVOR | Upgrade
The Home Creator Way

Model:BW1000A、BW2000A、BW1020A

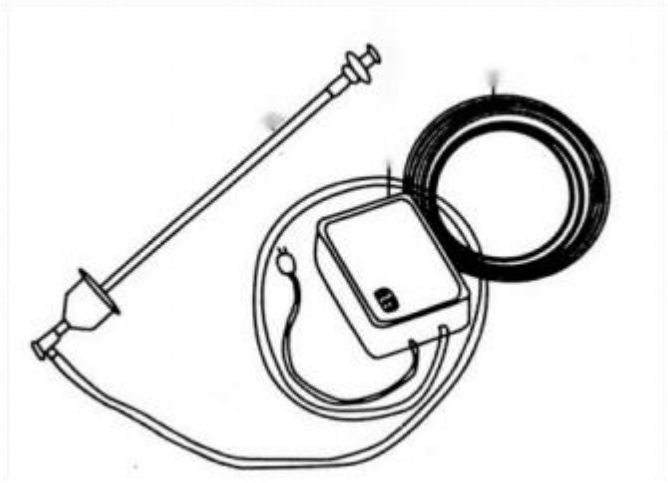

Tip: The picture is for reference only.

This is the original instruction, please read all manual instructions carefully before operating. VEVOR reserves a clear interpretation of our user manual. The appearance of the product shall be subject to the product you received. Please forgive us that we won't inform you again if there are any technology or software updates on our product.

	Warning-To reduce the risk of injury, user must read instructions manual carefully.
	**CORRECT DISPOSAL** This product is subject to the provision of european Directive 2012/19/EU. The symbol showing a wheelie bin crossed through indicates that the product requires separate refuse collection in the European Union. This applies to the product and all accessories marked with this symbol. Products marked as such may not be discarded with normal domestic waste, but must be taken to acollection point for recycling electrical and electronic devices.
	Indoor Use Only
	Compliance is a EC security certification.

SAFETY INSTRUCTIONS

Thank you for using this product. Please read all of the instructions before using it.The information will help you achieve the best possible results.

WARNING:Please read this manual carefully before using the product. Failure to do so may result in serious injury.

FIRE AND BURN HAZARD

Do not operate the pump near flammable or explosive gases, liquids, or vapors. Do not block ventilation openings. The pump may become hot during operation; avoid contact with hot surfaces.

PERSONAL INJURY PREVENTION

Keep hands, hair, clothing, and tools away from rotating parts, inlet, and outlet ports during operation. Do not attempt to disassemble, repair, or modify the pump while connected to power. Keep children and pets away from the pump during use and storage.

CORRECT OPERATION

Do not run the pump dry for extended periods; this may cause overheating and damage. Do not exceed the rated voltage, flow rate, or head pressure marked on the nameplate. Use only with clean water as intended; do not pump corrosive, abrasive, flammable, or hazardous fluids unless specifically approved.

INSTALLATION & GROUNDING

Install and ground the pump in accordance with local electrical codes and standards. Ensure stable mounting to prevent vibration or tipping. Do not use the pump for applications other than its intended purpose.

MAINTENANCE

Disconnect power before cleaning, inspecting, or maintaining the pump. Do not use high-pressure water to clean electrical parts. Replace worn or damaged parts only with manufacturer-approved components.

COMPLIANCE STATEMENT

This product complies with relevant EU safety directives. Dispose of electrical equipment separately from household waste according to WEEE directives. Do not dispose of in fire. And this pump is intended for consumer or commercial use according to national electrical code (NEC) requirements. Unauthorized modification may void the product approval and user's authority to operate the equipment.

ELECTRIC SAFETY!

RISK OF ELECTRIC SHOCK: This pump contains electrical components. To reduce the risk of electric shock, do not immerse the power cord, plug, or motor housing in water or any liquid unless the pump is specifically designed for submersion. Do not operate the pump with wet hands. Do not use the pump if the power cord is damaged.

1.Before using, check that the voltage power corresponds to the one shown on the appliance nameplate. Ensure that the voltage set on the machine corresponds to the electricity supply in your country.

2.Do not operate any appliance with a damaged cord or plug or after it malfunctions or has been damaged in any manner. Return the appliance to the nearest authorized service facility for examination, repair, or adjustment.

3.If the supply cord is damaged, it must be replaced by a special cord or assembly available from the manufacturer or its service agent.
4.Do not let the cord hang over the edge of a table or counter or touch hot surface.
5.Do not use appliances for other than intended use.
6.Do not use outdoors. HOUSEHOLD USE ONLY
7.To protect against fire, electric shock, or personal injury, do not immerse cords, electric plugs, or appliances in water or other liquids.
8.The use of accessories, which the appliance manufacturer does not recommend, may result in fire, electric shock, or personal injury.
9.This appliance can be used by children aged 8 years and above and persons with reduced physical, sensory, or mental capabilities or lack of experience and knowledge if they have been given supervision or instruction concerning the safe use of the appliance and understand the hazards involved.
10.Close supervision is necessary when any appliance is used by or near children. Children shall not use the appliance. Children shall not make cleaning and user maintenance.
11.Do not use an extension cord with this product.
12.The power cord should lie flat on a table or counter surface and may not hang over the edge. Please keep it away from hot surfaces and water.

ATTENTION!



WARNING! Keep children and pets away.
WARNING!Remove all packaging materials and keep them for future use.Packaging materials are not a toy.
WARNING!Don't let children play with the packaging materials. If they swallow the packaging materials, they will suffocate!

SAVE THESE INSTRUCTIONS

HOW THE SYSTEM WORKS

The Bottled Water Dispensing System was designed to pump water from a commercially available 5-gallon water bottle(bottle mouth inner diameter> 39mm).The system will deliver the water under pressure to an individual drinking water faucet,the water inlet of a refrigerator to the ice maker and chilled drinking water tap,and to certain commercial coffee and tea brewers.

When the suction wand is inserted into the 5-gallon bottle(bottle mouth inner diameter> 39mm),it will activate the float switch on the end of the wand and turn an the pump.This same float switch shuts off the system when the bottle is empty. The wand has a built-in back-flow prevention valve that prevents water from flowing back into the bottle or spilling while changing bottles.

The heart of the system is the pump module, which automatically adjusts the flow and pressure to flush an appliance or faucet and stops automatically.

Check the bottle opening size before startup and use!

This equipment is only suitable for bottled water bottles with bottle mouth inner diameter> 39mm, because the front end of the suction pipe needs to be fully extended into the barrel before the machine can work normally.



INVENTORY OF SYSTEM COMPONENTS

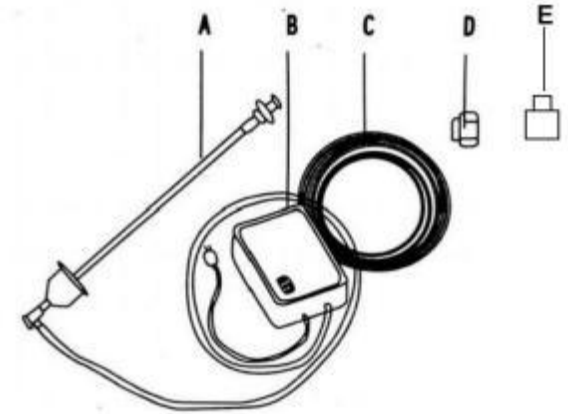

A:Suction Wand and Hose Assembly(The double-tube model has 2 groups）

B:Machine ontology（The plug contains 3 types：US、 EU、 AU）

C:20 feet of 1/4 inch Discharge Tube

D:Optional Refrigerator Fitting（Nuts + seals）

E:Slow shock soft adhesive plug

TOOLS REQUIRED TO INSTALL SYSTEM

（**These are not included**）

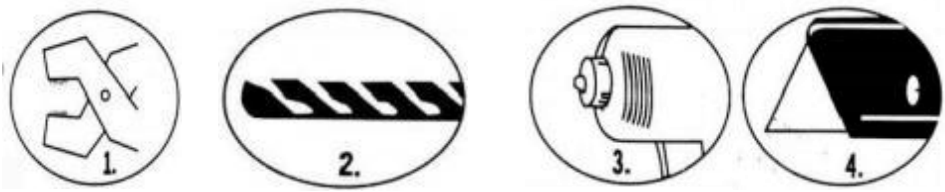

1.Medium sized Wrench 2.7/16"or 1/2"Drill Bit
3.Power Drill 4.Sharp Knife or Box Knife

COMPARE PRECAUTIONS

Install soft adhesive (optional or not)



REMOVAL OF PLUG

To remove plug (red or white in color):

1.Pull out the plug-in
2.Push in collet squarely against face of fitting
3.With the collet held in this position,the plug can be removed.
4.Insert the outlet water PE tube.
5.Install the pins as is

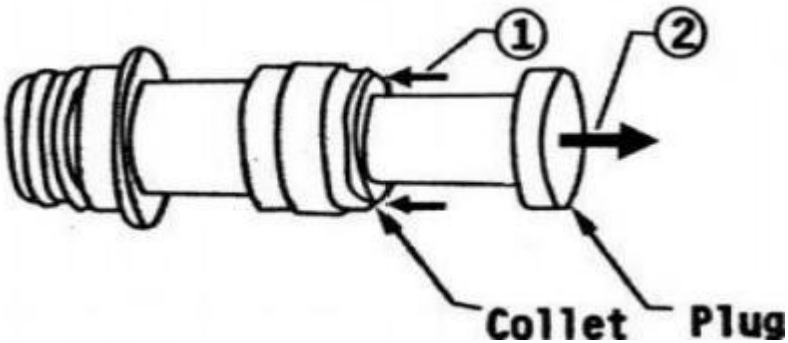

The water flow rate can be adjusted to the style
Rotate the left and right to adjust



MOUNTING OF SYSTEM

Select a large cabinet to accommodate the 5-gallon bottle and suction wand assembly. Place the Pump Module on the cabinet floor with an on/off switch and suction tube facing out toward the cabinet doors. Position the bottle as close to a grounded electrical outlet as possible and close the five-gallon bottle to the pump module without kinking the suction hose.

The Bottled Water Dispenser System may also be placed in a pantry, closet, cellar, or other location with a grounded electrical outlet.

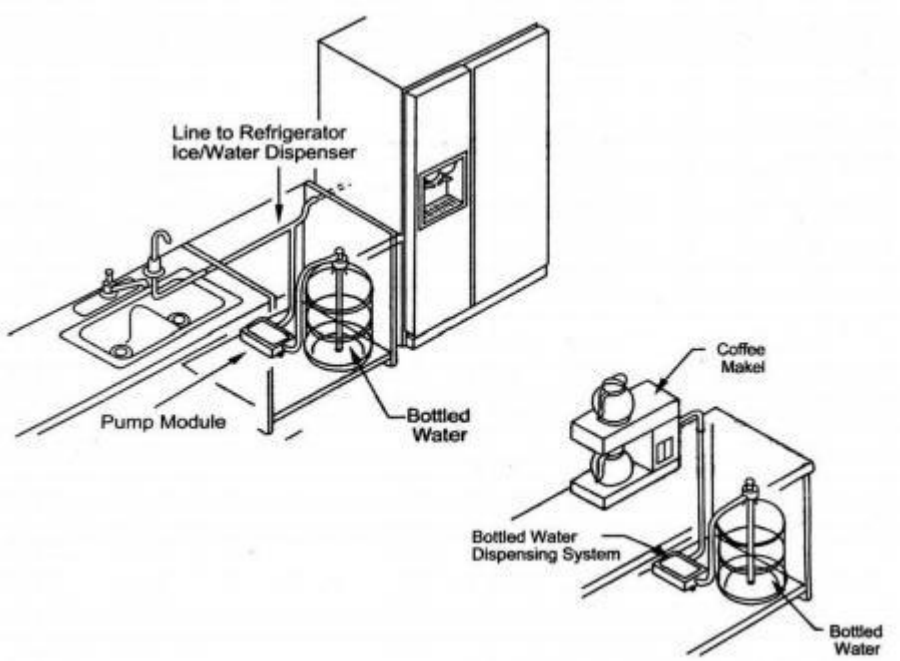

Dual-tube model of the same installation principle

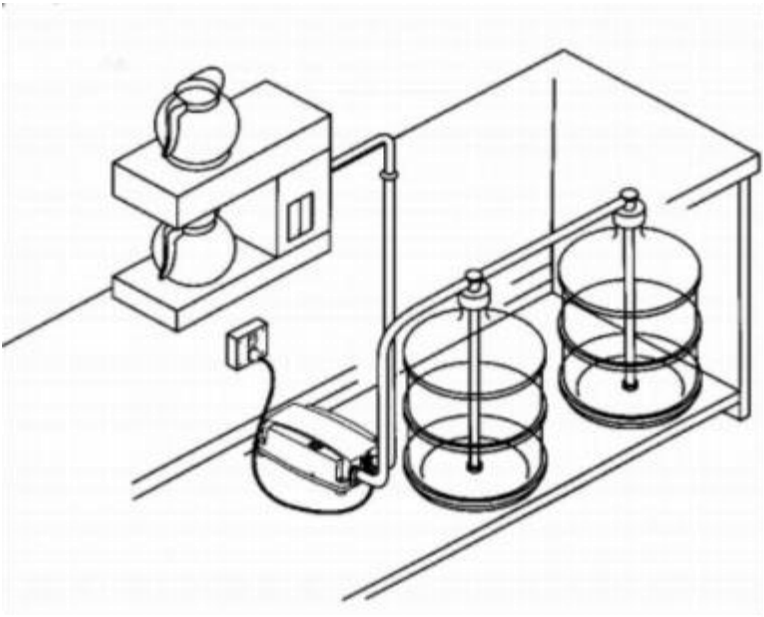

PLUMBING

There are 20 feet of 1/4"0. D. polyethylene tubing supplied with the Bottled Water Dispensing System. Carefully measure the distance between the pump module outlet and the appliance water inlet or optional faucet, and cut the tubing clean and square to prevent fitting leaks. If the refrigerator and optional faucet are being connected, use the 1/4"tube "T"fitting and place it in an accessible location. Remove the plug from the pump module outlet port by pushing the collet against the body while sliding the plug out of the fitting. See removal of plugs. Push the cleanly cut tubing end into the pump module outlet port, past the O-ring, to the tube stop. Route the tubing to the refrigerator water valve and connect it to the water inlet valve at the back of the refrigerator using the tube connector fitting. First, slip the nut over the tube, place the ferrule over the tube, install it onto the refrigerator water valve fitting, and tighten.

For installation and use with commercial coffee and tea brewing equipment: Many commercial coffee and tea brewing machines can be connected to a water supply line. Ensure that you have a 1/4" 1.D. The connection fitting at the water inlet can accept the supplied 1/4" 0.D. tubing. These brewing machines have a factory-installed device that restricts incoming water to a state pressure that won't damage the machine. This device is usually called an inlet pressure regulator or flow restrictor, limiting incoming water pressure to approx. 90-100psi. Remove the inlet restrictor device if you intend to use the system with one of these brewing machines. Consult the brewing machine manufacturer for details. Failure to remove the brewing machine's restrictor may cause the series pump to cycle itself off and on repeatedly, leading to premature motor failure of the unit. This type of failure is not covered under warranty. The use of filter devices with your commercial brewer is unnecessary; see below for installation on refrigerators with ice-making and water dispensing functions. Do not use any external filtration devices. These will cause the pump to over-cancel, possibly causing premature failure, which is not a warranty. If your refrigerator has factory-installed internal filtration, that must remain in place

as part of the water line. This, too, may cause over-cycling, resulting in pump failure. Contact the refrigerator maker and inquire about obtaining an empty or dummy filter housing instead of the standard filter model. If none is available, the use of a small accumulator tank will be necessary.

ELECTRICAL

WARNING:Risk of Electrical Shock!

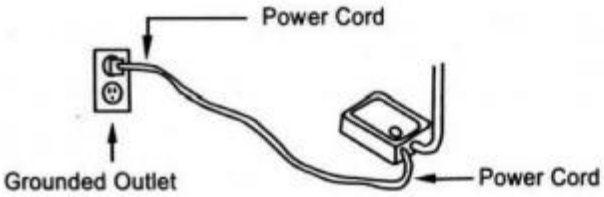

WARNING!

Damaged power cord must be replaced by factory authorized

SYSTEM START-UP

Before the Bottled Water Dispensing System is put into service, the system should be sanitized by following the maintenance and sanitation clean-in-place procedure.

After the Bottled Water Dispensing System has been mounted in a suitable location with the auction wand installed into the bottle and the discharge tube routed to the appliance water inlet (or to the optional drinking water faucet)

Turn the dispensing system on by placing the on/off switch in the on position and operating the appliance dispensing valve or the drinking water faucet to vent all the air from the Bottled Water Dispenser. After the air is evacuated from the system, close the appliance dispensing valve or the water faucet, and the pump will start automatically until you open the water dispenser valve or faucet. For commercial coffee and tea brewers, follow the manufacturer's plumbing and operating instructions.

The seal at the ice maker connection should be loosened or disconnected for refrigerators with an ice maker only to vent the trapped air in the system. When water is present at the connection, reconnect, tighten, and check for leaks. Once the system is vented,it will not require venting again, even after the bottle changes.

SUCTION WAND INSTALLATION

To install the suction wand into a standard 5-gallon bottle, place the bottle close to the system and remove the bottle cap, then install the suction wand into the bottle. (Note: If the bottle is overfilled, dispense enough water to install the suction wand to the bottom of the bottle). Push the suction wand bottle cap over the bottle and push the wand to the bottom center.

SUCTION WAND REMOVAL AND CHANGING BOTTLES

Before removing the suction wand from the empty bottle, move the bottle to an open area outside the cabinet. Put a new bottle next to the empty bottle, clean the neck and cap area with detergent, and remove the cap. Remove the suction wand from the empty bottle by lifting the wand cap with a rocking motion, pulling the cap off the bottle, sliding the suction wand out of the bottle, and place directly into the new bottle while sliding the cap over the new bottleneck.

Do not attempt to remove the suction wand by pulling on the soft plastic tube, as this can cause the wand to break permanently.

WARNING!

Do not place the suction wand on the floor, counter, or sink, as this could contaminate the assembly. If the bottle is overfilled, dispense enough water to allow the suction wand to be pushed to the bottom of the bottle.

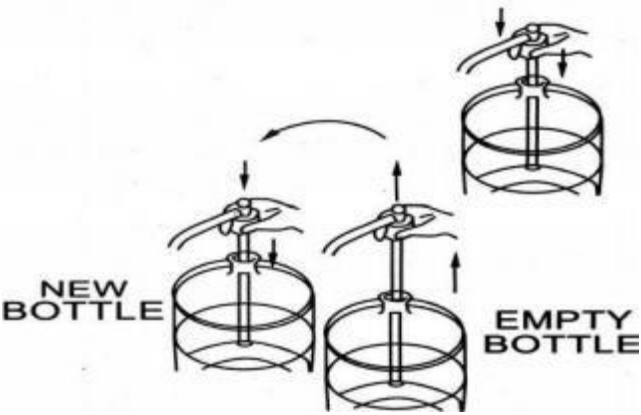

MAINTENANCE AND SANITATION

Two 1/2 Gallon Household Pails

One Roll of Paper Towels

One Small Container of Household Bleach

Clean In-Place Procedure

Using the on/off switch on the front of the enclosure,turn Bottled Water Dispensing System off by putting the switch in the off position

Fill a clean pail (A)with two (2)gallons of hot tap water(135F/57.2℃),adding one (1)ounce of household bleach.







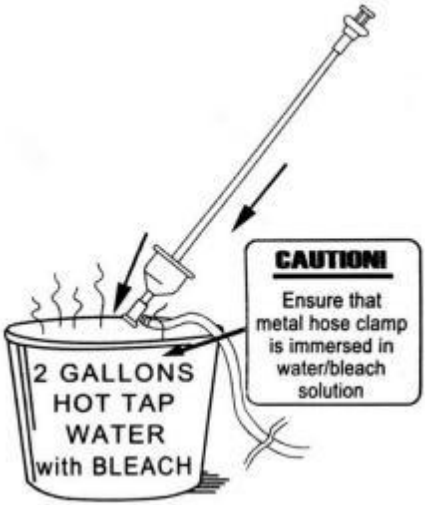

Remove the suction wand from the pure water bottle and submerge the bottle cap end into pail (A), taking care to ensure that the metal hose clamp connecting the hose to the suction wand is totally immersed in the water/bleach solution for ten minutes and then wash the underside of the cap and suction tube exterior with a clean paper towel. If using the optional faucet, disconnect the tubing. Remove the faucet, immersing it in the water/bleach solution for ten minutes. Wash the faucet exterior with a clean paper towel; install the faucet and reconnect the tubing. Place the suction wand into a clean, empty pail (B) and dispose of the solution pail (A).

Refill the cleaned pail (A) with two (2) gallons of hot tap water(135 ° F/57.2 ° C), adding one (1) ounce of household bleach. Then, place the suction wand into the pail with the bottle cap up.

Disconnect the discharge tube from the faucet or the refrigerator and place it in the empty second pail (B). (Do not use pail with clean water and chlorine solution)

Turn the tum dispensing system on by placing the on/off switch in the on position. Dispense all of the chlorine solution into pail (B). Place the

discharge tube into pail(A), dispose of the bleach, and rinse pail (B). Replace the tube with pail (B).

Refill pail (A) with two (2) gallons of hot tap water (135° F/57.2° C),

adding one (1)ounce of household bleach. Dispense bleach as in step #6. Reinstall the suction wand into a new bottle of pure water, reconnect the discharge tube to the refrigerator or faucet, and dispense 12 to 18 ounces of water or until the bleach taste is removed.

Cleaning should be performed at least four (4) times per year.

CAUTION

Please do not place the Bottled Water Dispensing System in a dishwasher, as it can cause the pump and control electrical to fail.

TROUBLESHOOTING

System Will Not Dispense Water

Check on/off switch position

Check power to dispensing system

Check location of suction wand in bottle

Check for empty bottle

Check for air in system

Discharge Tube LeaksAt Fitting

Push tube all the way into tube stop

Remove tube and cut 1/4"off end,square and reinstall

Check correct tube size in fitting, tube size is 1/4°O.D. Fitting should be 1/4"L.D.

System will Not Shut-Off

Check for leaks in tubing system

Check for leaks at tube fittings

Check for leaks at faucet,ice maker or refrigerator water valve

check pressure switch by turning faucet off and on

Check float switch position in bottle

System continually turns off and on while in use

Check for restriction devices at the appliance inlet.

Check for filter unit in line.

