UTILITECH®

UTILITECH and logo design are trademarks or registered trademarks of LF, LLC. All rights reserved.

c UL us LISTED

ITEM #8352131
MODEL #T-PHTC-U

WIRE-IN DUSK-TO-DAWN LIGHT CONTROL

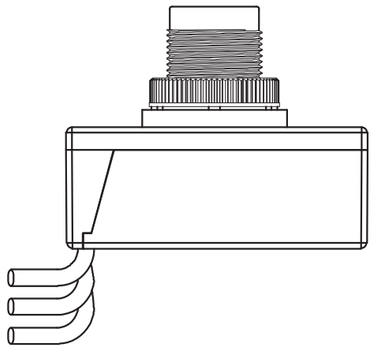

Questions, problems or missing parts?
Before returning, contact us on:
866-994-4148, 8 a.m. - 8 p.m., EST, Monday - Sunday or **ascs@lowes.com.**

Thank you for purchasing this **UTILITECH** product. We've created these easy-to-follow instructions to ensure you spend your time enjoying the product instead of putting it together. But, if you need more information than what is provided here, please visit Lowes.com, search the item number and refer to the Guides & Documents tab on the product's page.

TROUBLESHOOTING

PROBLEM	POSSIBLE CAUSE	CORRECTIVE ACTION
I. Light does not turn **ON** at night II. Light stays **ON** during the day III. Light cycles **ON** and **OFF**	I. No power or incorrect wiring II. Sensor exposed to artificial light or shade III. Nearby light affecting sensor	I. Check breaker and verify wiring connections II. Reposition sensor to face natural daylight III. Relocate fixture to avoid feedback loop

CARE AND MAINTENANCE

- Keep sensor lens clean and free of dirt or debris.
- Do not cover or paint over the photocontrol.
- Periodically check wiring connections for security.

WARRANTY

- 1-year limited; UTILITECH warrants to the purchaser of this product, for the period of one (1) year following the date after the date of purchase that the product shall be free of defects in design, material, or workmanship.
  After sales customer support number: **866-994-4148**

⚠ SAFETY INFORMATION

CAUTION
- Turn OFF power at the breaker before installation or servicing.
- Do not modify or disassemble the photocontrol.
- Install in a weatherproof electrical box suitable for outdoor use.
- Keep away from direct exposure to artificial light sources.
- Follow all local electrical codes.

INSTALLATION OVERVIEW

Please read and understand this entire manual before attempting to assemble, operate or install the product.
If any part is missing or damaged, do not attempt to assemble the product.

Estimated Assembly Time: 15-30 minutes

WIRING LEGEND

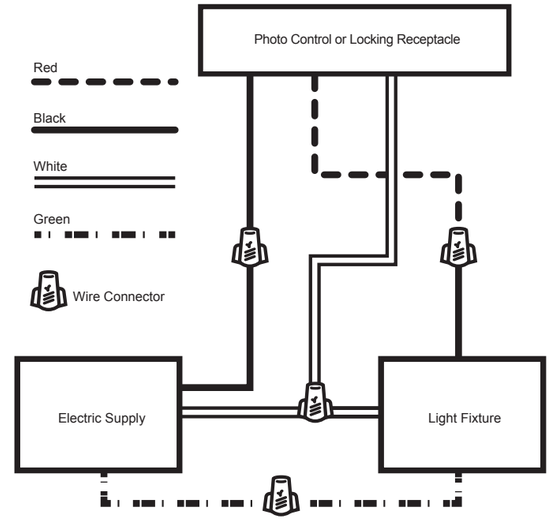

ELECTRICAL RATINGS
120VAC, 50/60 Hz
1800W Tungsten
1800VA Ballast
5A LED
15A Max

INSTRUCTIONS

To complete the connection of a lighting fixture to a photo control, follow the steps below. Make all connections using approved wire connectors
1. **Turn off power** at the circuit breaker before installation and performing any operation.
2. **Mount the photo control** on a weatherproof electrical box.
3. **Position the sensor** so it faces natural light and is away from artificial light sources. Built-in time delay helps prevent false switching. Avoid mounting near reflective surfaces or other light sources, as this may cause cycling.
4. **To complete the connection** of a lighting fixture to a photo control, follow the steps above and the diagram shown.
   Make all connections using wire connectors:
   a. Connect the black wire from the electrical supply (hot line) to the black wire from the photo control.
   b. Connect the black wire from the light fixture to the red wire from the photo control.
   c. Connect together the white wires from the light fixture, the electric supply and the photo control.
   d. Connect the green (ground) wire from the electrical supply to the green wire from the light fixture.
5. **Restore power** at the circuit breaker.
6. **Test connection.** Light fixture will turn on in darkness. Light fixture will turn off in daylight within 30 to 180 seconds. If the photo control is tested during daytime, cover the sensor to simulate darkness. If needed, shine a flashlight directly on the sensor to confirm the fixture turns off.

FEELING CONFIDENT? START YOUR NEXT PROJECT

- Visit - lowes.com, for more information.

Printed in China

QUICK REFERENCE GUIDE