Quick Start Guide
45-03038 Steel Cart

Read the manual that came with your Steel Cart for:
- Important safety warnings
- Further explanation of features
- Operating instructions

Problem?
Call 1-800-448-9282

Agri-Fab

HARDWARE PACKAGE

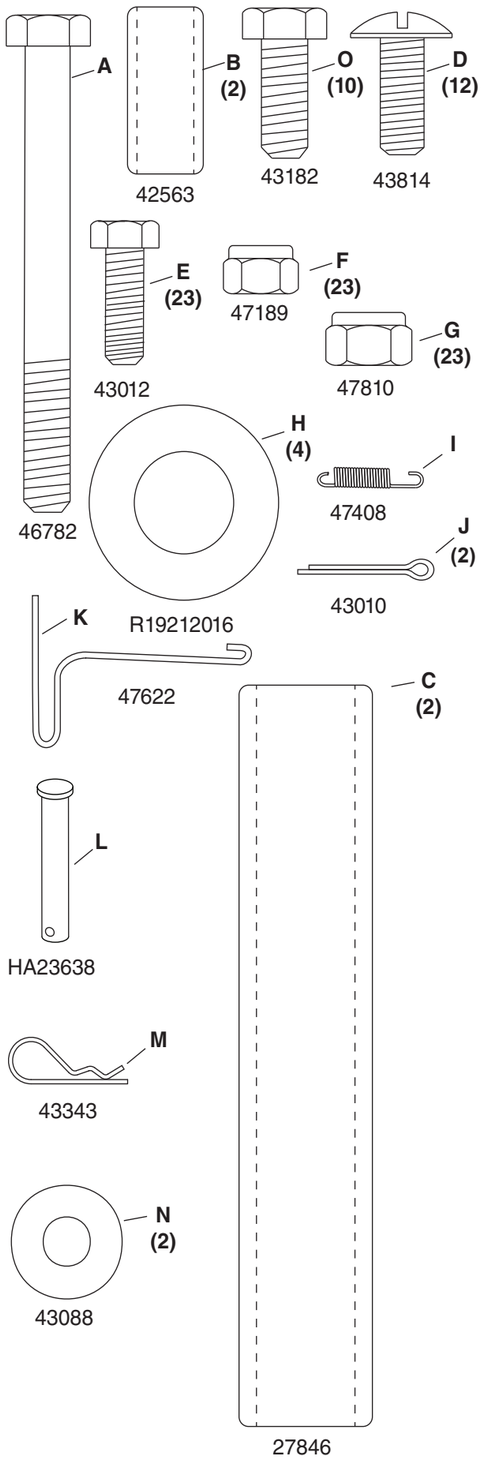

STEP 1 (SEE FIGURE 1): Assemble the cart body (5) using three 1/4" x 3/4" hex bolts (E) and 1/4" nylock nuts (F). Tighten hardware.

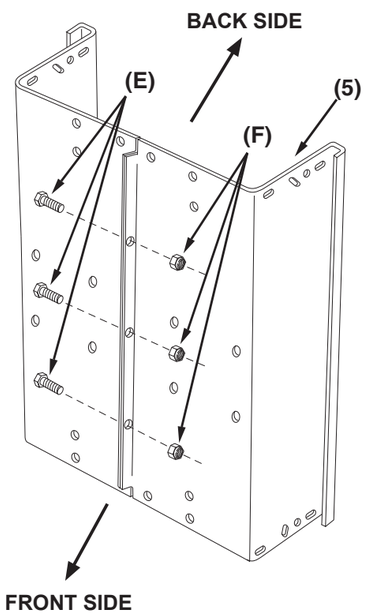

Figure 1

STEP 2 (SEE FIGURE 2): Attach the lower rear angle bracket (4) to the assembled cart body using four 5/16" x 3/4" truss head bolts (D), 5/16" nylock nuts (G) **Do Not Tighten!**

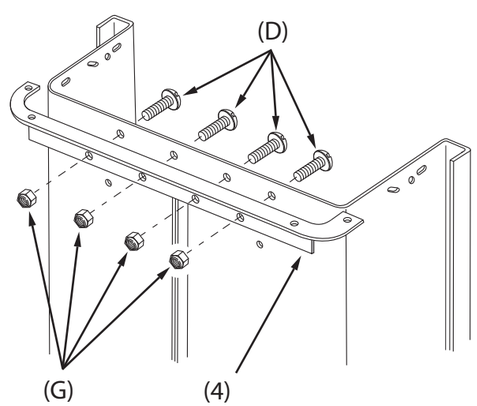

Figure 2

STEP 3 (SEE FIGURE 3A & 3B): Attach the rear angles (2 & 3) to the cart bed using two 1/4" x 3/4" hex bolts (E), 1/4" washers (N) and 1/4" nylock nuts (F). **Do Not Tighten!**

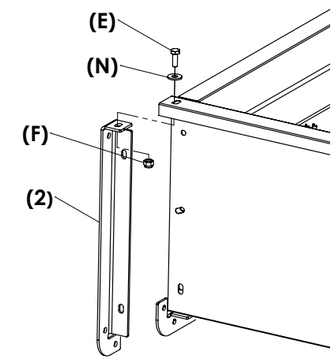

Figure 3A

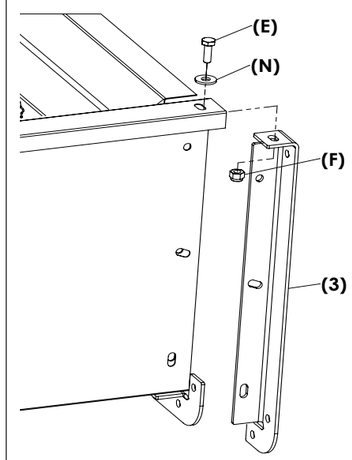

Figure 3B

STEP 4 (SEE FIGURE 4): Attach the rear angles (2 & 3) to the lower rear angle (4) using two 1/4" x 3/4" hex bolts (E) and 1/4" nylock nuts (F). **Do Not Tighten!**

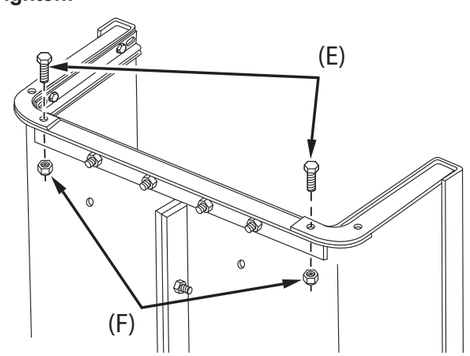

Figure 4

Quick Start Guide
45-03038 Steel Cart

Read the manual that came with your Steel Cart for:
- Important safety warnings
- Further explanation of features
- Operating instructions

Problem?
Call 1-800-448-9282

Agri-Fab

STEP 5 (SEE FIGURE 5): Secure the rear angles (2 & 3) using two 1/4" x 3/4" hex bolts (E) and 1/4" nylock nuts (F). **Do Not Tighten!**

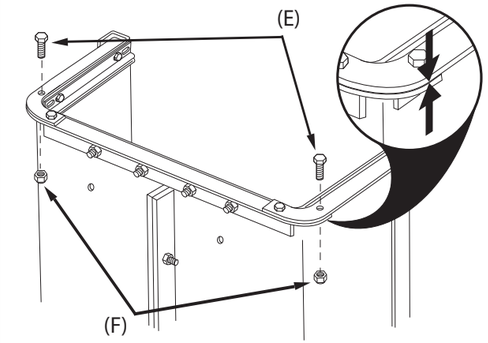

Figure 5

STEP 6 (SEE FIGURE 6): Attach the tailgate guides (6) using four 1/4" x 3/4" hex bolts (E) and 1/4" nylock nuts (F). Tighten hardware.

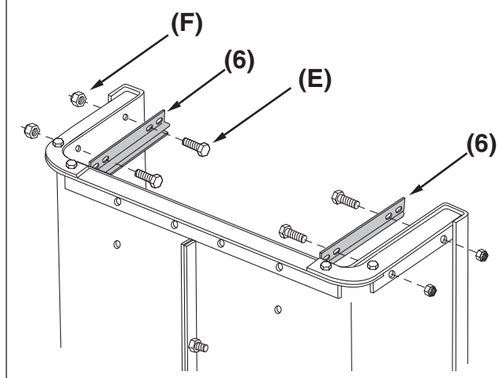

Figure 6

STEP 7 (SEE FIGURE 7): Tighten all fasteners from previous steps.

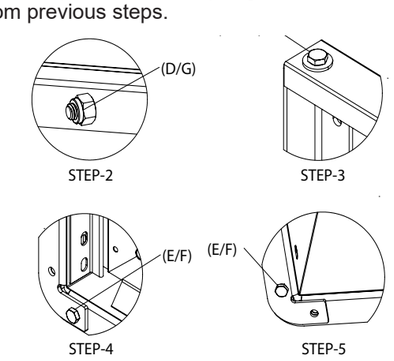

Figure 7

STEP 8 (SEE FIGURE 8): Position the cart bed with the rear of the cart facing towards the ground as shown in figure 8.

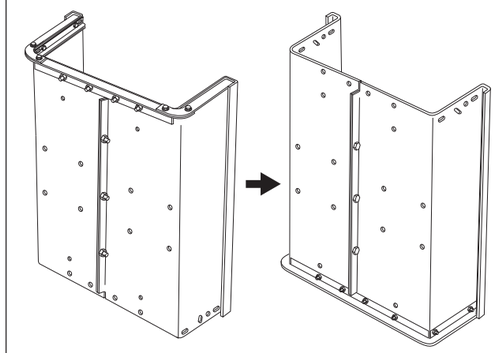

Figure 8

STEP 9 (SEE FIGURE 9): Attach the front panel (8) to the front of the cart bed (on the outside) using six 1/4" x 3/4" hex bolts (E) and 1/4" nylock nuts (F). Tighten hardware.

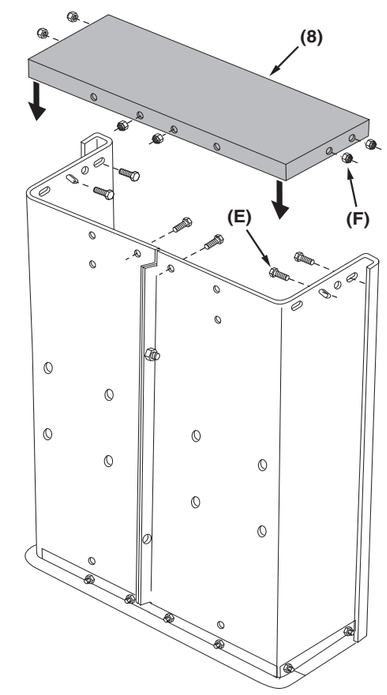

Figure 9

STEP 10 (SEE FIGURE 10): Attach the bed supports (7) to the cart and attach the wheel supports (10) to the bed supports (7) using eight 5/16" x 3/4" truss head bolts (D) and 5/16" nylock nuts (G). Tighten hardware.

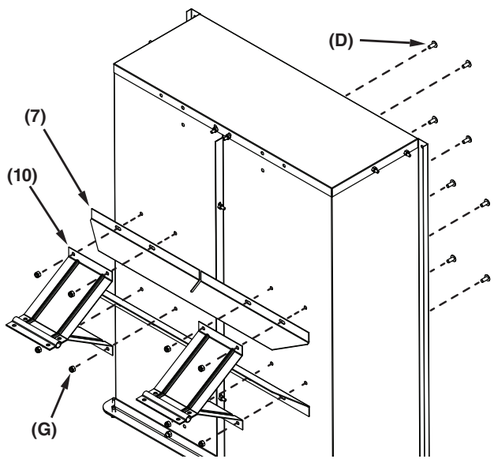

Figure 10

STEP 11 (SEE FIGURE 11): Secure the wheel supports using eight 5/16" x 3/4" hex bolts (O) and 5/16" nylock nuts (G). **Do Not Tighten!**

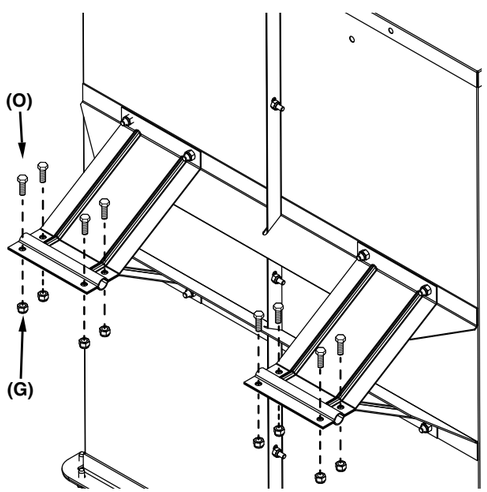

Figure 11

STEP 12 (SEE FIGURE 12): Attach the latch stand bracket (9) to the cart bed and front panel (8) using four 1/4" hex bolts (E) and 1/4" nylock nuts (F). Make sure to orient the tab on the latch stand bracket as shown in figure 12. Tighten hardware.

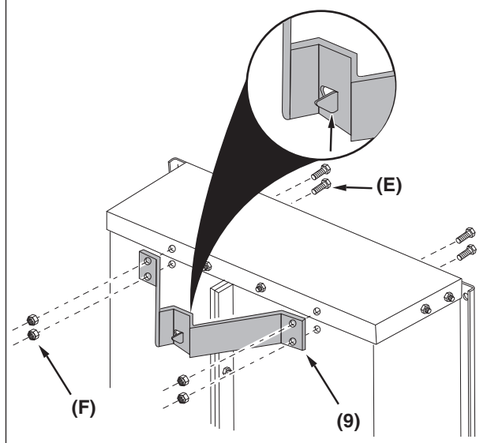

Figure 12

STEP 13 (SEE FIGURE 13): Position the cart bed upside down and place the draw bar tongue (15) as shown in figure 13.

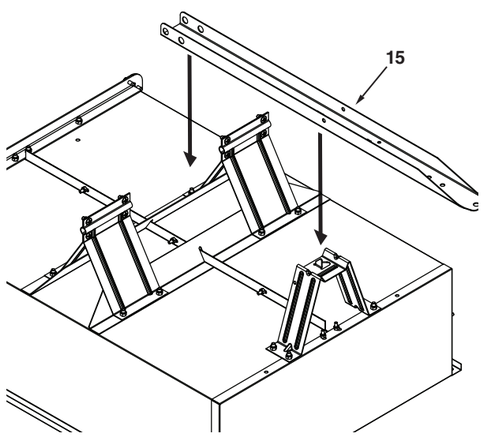

Figure 13

STEP 14 (SEE FIGURE 14): Install the axle (11) through the wheel support, a spacer (C), the rear hole in the draw bar tongue (15), a spacer (C), and the wheel support as shown in figure 14.

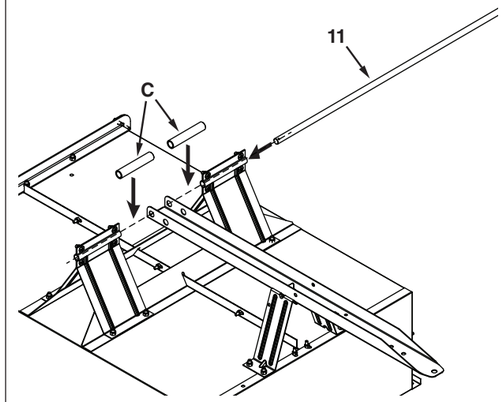

Figure 14

STEP 15 (SEE FIGURE 15): Attach the wheels to the axle by installing a large washer (H), a wheel (12), another large washer (H) and a 1/8" cotter pin (J). Repeat this step for the other side.
Note: Be sure to lubricate the axle ends before attaching wheels.

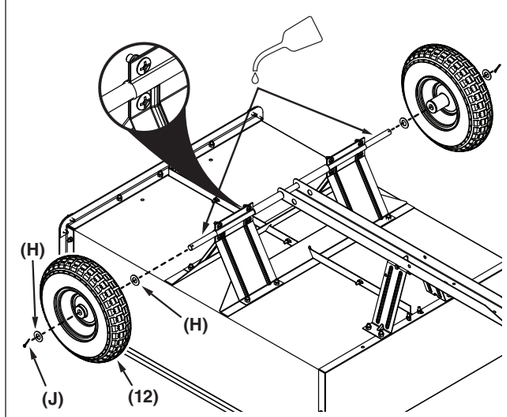

Figure 15

Quick Start Guide
45-03038 Steel Cart

Read the manual that came with your Steel Cart for:
- Important safety warnings
- Further explanation of features
- Operating instructions

Problem?
Call 1-800-448-9282

Agri-Fab

STEP 16 (SEE FIGURE 16): Tighten hardware installed on Step 11.

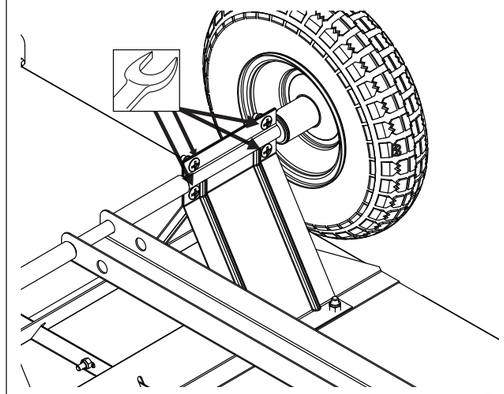

Figure 16

STEP 17 (SEE FIGURE 17): Install the latch lock lever (13) by inserting a 5/16" x 3" hex bolt (A) through one side of the draw bar tongue (15), a spacer (B), the latch lock lever (13) a spacer (B), the other side of the draw bar tongue (15), and a 5/16" nylock nut (G) as shown in figure 16. Tighten hardware.

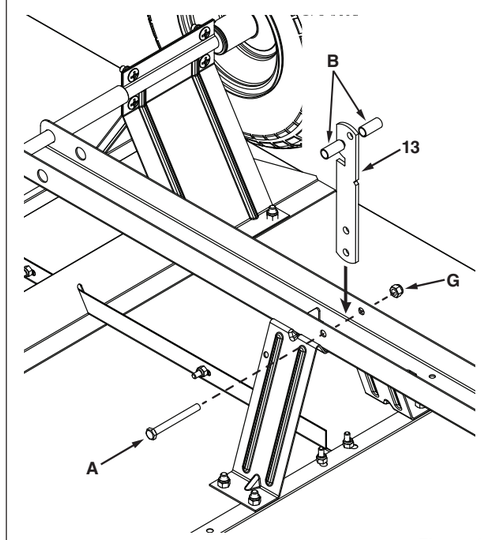

Figure 17

STEP 18 (SEE FIGURE 18): Attach the extension spring (I) to the latch lock lever by inserting one end into the hole in the latch lock lever. Using the spring puller tool (K), attach the other end of the extension spring (I) to the square hole in the draw bar tongue as shown in figure 18.

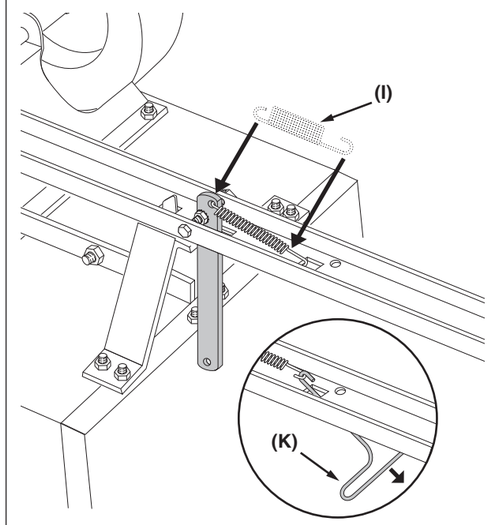

Figure 17

STEP 19 (SEE FIGURE 19): Attach the hitch bracket (14) to the draw bar tongue using two 5/16" x 3/4" hex bolts (O) and 5/16" nylock nuts (G). Install the hitch pin (L) through the holes in the hitch bracket (14) and the draw bar tongue and secure with a 1/8" hair cotter pin (M). Tighten hardware.

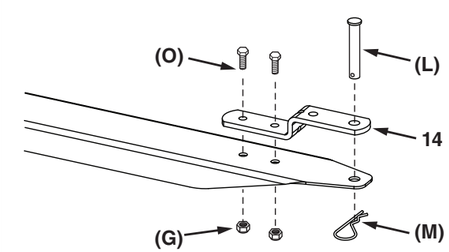

Figure 19